YASKAWA

YASKAWA AC Drive ES700

For Elevator Applications

Technical Manual

Model	CIPR-ES70Bxxxxxxxx
Type	200 V Class: 3.7 to 110 kW
	400 V Class: 3.7 to 160 kW

To properly use the product, read this manual thoroughly and retain for easy reference, inspection, and maintenance. Ensure the end user receives this manual.

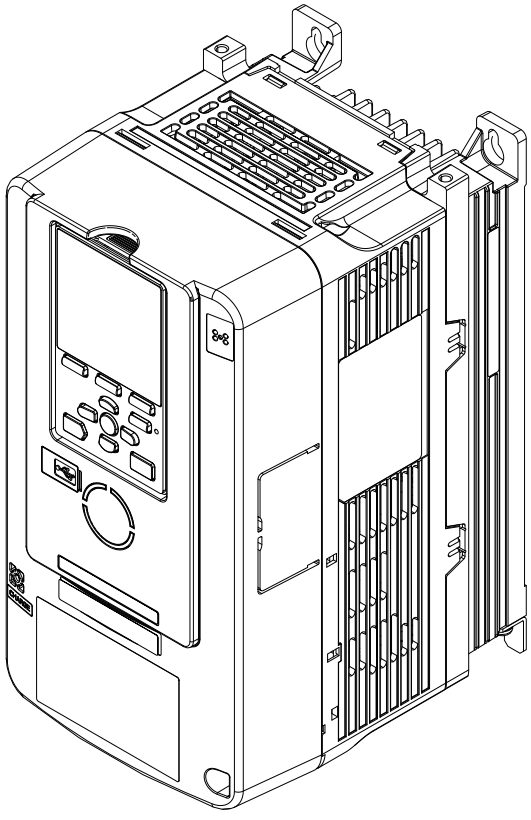

Receiving 1

Mechanical Installation 2

Electrical Installation 3

Startup Procedure and Test Run 4

Standards Compliance 5

Network Communications 6

Troubleshooting 7

Periodic Inspection and Maintenance 8

Disposal 9

Specifications 10

Parameter List 11

Parameter Details 12

MANUAL NO. SIEP C710617 2EA

This Page Intentionally Blank

Table of Contents

i. Preface and General Precautions 13
i.1 Receiving 14
Glossary 14
About Registered Trademarks 14
i.2 Using the Product Safely 15
Explanation of Signal Words 15
Section Safety 15
Warning Label Content and Location 18
i.3 Warranty Information 20
Exclusion of Liability 20
1. Receiving 21
1.1 Section Safety 22
1.2 Model Number and Nameplate Check 23
1.3 Features and Advantages of Control Methods 26
2. Mechanical Installation 27
2.1 Section Safety 28
2.2 Installation Environment 30
2.3 Installation Position and Clearances 31
Install Single Drive 31
External Heatsink Installation 31
2.4 Moving the Drive 33
Using the Hanging Brackets to Move the Drive 33
Instructions on Drive Suspension 33
2.5 Drive Watt Loss 35
Drive Watt Loss (without Built-in EMC Filter) 35
Drive Watt Loss (with Built-in EMC Filter) 36
2.6 Remove and Reattach the Keypad 37
Remove the Keypad 37
Reattach the Keypad 37
2.7 Install the Keypad in a Control Panel or Another Device 38
Connect the Keypad from a Remote Location 38
2.8 Removing/Reattaching Covers 43
Remove the Front Cover (Models: 2022 to 2225 and 4012 to 4188) 43
Reattach the Front Cover (Models: 2022 to 2225 and 4012 to 4188) 44
Remove the Front Cover (Models: 2269 to 2519 and 4225 to 4380) 44
Reattach the Front Cover (Models: 2269 to 2519 and 4225 to 4380) 45
Remove the Terminal Cover (Models: 2269 to 2519 and 4225 to 4380) 46
Reattach the Terminal Cover (Models: 2269 to 2519 and 4225 to 4380) 46
2.9 Installation Methods 48
Standard Installation 48

External Heatsink Installation 48
3. Electrical Installation 51
3.1 Section Safety 52
3.2 Standard Connection Diagram 55
3.3 Main Circuit Wiring 58
Motor and Main Circuit Connections 58
Configuration of Main Circuit Terminal Block 58
Main Circuit Terminal Functions 63
Wire Selection 63
Main Circuit Terminal and Motor Wiring 70
Protection of Main Circuit Terminals 74
3.4 Main Circuit Terminal Block Wiring Procedure 75
Wire the Main Circuit Terminal Block 75
3.5 Control Circuit Wiring 81
Control Circuit Connection Diagram 81
Control Circuit Terminal Block Functions 82
Control Circuit Terminals 86
Wiring the Control Circuit Terminal 88
Switches on the Terminal Board 91
3.6 Control I/O Connections 92
Set Sinking Mode/Sourcing Mode 92
Set Input Signals for MFAI Terminals A1 to A3 92
Set MFAI Terminal A3 to PTC Input 93
Set Output Signals for MFAO Terminals FM, AM 93
Switch ON Termination Resistor for MEMOBUS/Modbus Communications 94
3.7 Connect the Drive to a PC 95
3.8 Braking Resistor Installation 96
Install a Braking Resistor Unit: LKEB-Type 96
Install a Braking Unit: CDBR-Type 96
Connect Braking Units in Parallel 101
Dynamic Braking Option Overload Protection 101
3.9 Drive Wiring Protection 102
Installing an Earth Leakage Circuit Breaker (ELCB) 102
Installing a Molded-Case Circuit Breaker (MCCB) or Earth Leakage Circuit Breaker (ELCB) 102
3.10 Dynamic Braking Option, Motor Protection 103
Installing an Electromagnetic Contactor (MC) at the Input Side of the Drive 103
Installing a Thermal Overload Relay on the Drive Output 103
3.11 Improve the Power Factor 105
Connect an AC Reactor or a DC Reactor 105
3.12 Prevent Switching Surge 106
3.13 Decrease Noise 107
Connect a Noise Filter to the Input Side (Primary Side) 107
Connect a Noise Filter to the Output Side (Secondary Side) 107
3.14 Protect the Drive during Failures 109
Factory-Recommended Branch Circuit Protection for UL Listing 109
3.15 Wiring Checklist 111
3.16 Motor Application Precautions 113
Precautions for Existing Standard Motors 113
4. Startup Procedure and Test Run 115
4.1 Section Safety 116
4.2 Keypad Components and Functions 118

LCD Display . . . 119
Indicator LEDs and Drive Status . . . 120
Keypad Mode and Menu Displays . . . 122
4.3 LED Indicator Status . . . 124
4.4 Start-up Procedures . . . 126
Flowchart A: Connect and Run the Motor with Minimum Setting Changes . . . 126
Sub-Chart A-1: Induction Motor Auto-Tuning and Test Run Procedure . . . 127
Sub-Chart A-2: PM Motor Auto-Tuning and Test Run Procedure . . . 128
4.5 Items to Check before Starting Up the Drive . . . 132
Check before Energizing the Drive . . . 132
Check after Energizing the Drive . . . 132
Make the Initial Settings . . . 132
Control Method Selection . . . 133
Setting the Motor Rotation Direction . . . 133
Setting the Encoder (Pulse Generator) . . . 134
Keypad Display Unit Selection . . . 134
4.6 Keypad Operation . . . 136
Home Screen Display Selection . . . 136
Examine User Custom Parameters . . . 137
Change Parameter Setting Values . . . 138
Check Modified Parameters . . . 139
Restore Modified Parameters to Defaults . . . 140
Show Fault History . . . 141
Show the Monitor . . . 142
Set Custom Monitors . . . 143
Show Custom Monitors . . . 144
Auto-Tuning the Drive . . . 145
Start Data Logging . . . 147
Configuring the Data Log Content . . . 148
Set Backlight to Automatically Turn OFF . . . 150
Show Information about the Drive . . . 152
Save a Backup of Parameters . . . 153
Write Backed-up Parameters to the Drive . . . 154
Verify Keypad Parameters and Drive Parameters . . . 155
Delete Parameters Backed Up to the Keypad . . . 156
Set the Keypad Language Display . . . 157
Set the Date and Time . . . 158
Set Parameters Using the Setup Wizard . . . 159
Disable the Initial Setup Screen . . . 161
Write Automatically Backed-up Parameters to the Drive . . . 162
4.7 Auto-Tuning . . . 163
Auto-Tuning for Induction Motors . . . 163
Auto-Tuning for Motor Parameters for PM Motor . . . 164
Precautions before Auto-Tuning . . . 165
Rotation Direction Trouble Shoot Function . . . 167
4.8 Setup Procedure for Elevator Applications . . . 169
External Interlock . . . 169
Speed Reference Selection and Up/Down Command Selection . . . 169
Speed Selection Using Digital Inputs (b1-01 = 0) . . . 170
Multi-Function Terminal Setup . . . 173
Accel/Decel Ramp and Jerk Settings . . . 173
Elevator Emergency Stop . . . 173
Inspection Operation . . . 174
Brake Sequence . . . 175
Brake Torque Check Function . . . 179
Adjustments for Elevator Ride Comfort . . . 182
Rescue Operation . . . 183
Brake Response Monitor . . . 195

Short Circuit Brake Sequence . . . 203
4.9 Improve Ride Comfort . . . 206
4.10 Test Run Checklist . . . 209
5. Standards Compliance . . . 211
5.1 Section Safety . . . 212
5.2 European Standards . . . 214
CE Low Voltage Directive Compliance . . . 214
EMC Directive . . . 224
5.3 UL Standards . . . 233
Area of Use . . . 233
Wire the Main Circuit Terminal Block . . . 233
UL Standards Compliance for DC Power Supply Input . . . 245
Low Voltage Wiring for Control Circuit Terminals . . . 246
Drive Motor Overload and Overheat Protection . . . 247
5.4 China RoHS Compliance . . . 252
Information on Hazardous Substances in This Product . . . 252
5.5 对应中国RoHS指令 . . . 253
本产品中含有有害物质的信息 . . . 253
5.6 Safe Disable Input . . . 254
Safe Disable Specifications . . . 254
Notes . . . 255
Using the Safe Disable Function . . . 256
5.7 No Motor Contactor Solution . . . 261
6. Network Communications . . . 263
6.1 Section Safety . . . 264
6.2 Field Bus Network Support . . . 265
6.3 MEMOBUS/Modbus Communications . . . 266
Configure Master/Slave . . . 266
Communication Specifications . . . 266
Communication with the PLC . . . 266
MEMOBUS/Modbus Drive Operations . . . 267
Communications Timing . . . 268
Message Format . . . 269
Examples of Messages for Commands/Responses . . . 271
Enter Command . . . 275
Self-Diagnostics . . . 275
Communications Data Table . . . 276
Error Codes . . . 294
7. Troubleshooting . . . 297
7.1 Section Safety . . . 298
7.2 Types of Faults, Minor Faults, Alarms, and Errors . . . 300
7.3 List of Fault, Minor Fault, Alarm, and Error Codes . . . 301
7.4 Fault . . . 306
7.5 Minor Faults/Alarms . . . 331
7.6 Parameter Setting Errors . . . 340
7.7 Auto-Tuning Error . . . 343
7.8 Backup Function Operating Mode Display and Errors . . . 347
7.9 Diagnosing and Resetting Faults . . . 348
Fault and Power Loss Occur at the Same Time . . . 348
Fault Occurs Without Power Loss . . . 348
Fault Reset . . . 348

7.10 Troubleshooting Without Fault Display . . . 350
Typical Problems . . . 350
The Parameter Settings Will Not Change . . . 350
The Motor Does Not Rotate after You Enter an Up/Down Command . . . 351
The Motor Rotates in the Opposite Direction from the Up/Down Command . . . 351
The Motor Is Too Hot . . . 352
The Correct Auto-Tuning Mode Is Not Available . . . 352
Encoder Offset Set During Auto-Tuning Consistently Differs by 30 Degrees or More . . . 352
oPE02 Error Occurs When Decreasing the Motor Rated Current Setting . . . 352
The Motor Stalls during Acceleration or Accel/Decel Ramp Is Too Long . . . 353
The Drive Speed Reference Is Different than the Controller Speed Reference Command . . . 353
There Is Too Much Motor Oscillation and the Rotation Is Irregular . . . 354
Deceleration Takes Longer than Expected when You Enable Dynamic Braking . . . 354
The Elevator Car Rolls Back when You Apply or Release the Brake . . . 354
There Is Audible Noise from the Drive or Motor Cables when You Energize the Drive . . . 354
The Earth Leakage Circuit Breaker (ELCB) Trips During Run . . . 354
The Motor Rotation Causes Oscillation or Hunting . . . 355
The Starting Torque Is Not Sufficient . . . 355
The Motor Rotates after You Shut Off the Drive Output . . . 355
The Output Speed Is Lower Than the Speed Reference . . . 355
The Motor Speed Is Not Stable when You Use a PM Motor . . . 355
The Motor Is Making an Audible Noise . . . 355

8. Periodic Inspection and Maintenance . . . 357
8.1 Section Safety . . . 358
8.2 Inspection . . . 360
Recommended Daily Inspection . . . 360
Recommended Periodic Inspection . . . 360
8.3 Maintenance . . . 363
Replaceable Parts . . . 363
Part Replacement Guidelines . . . 363
Monitors that Display the Lifespan of Drive Components . . . 363
Alarm Outputs for Maintenance Monitors . . . 364
Related Parameters . . . 364
8.4 Replace Cooling Fans and Circulation Fans . . . 365
Cooling Fans and Circulation Fans by Drive Model . . . 365
Fan Replacement (Procedure A) . . . 365
Fan Replacement (Procedure B) . . . 367
Fan Replacement (Procedure C) . . . 370
Fan Replacement (Procedure D) . . . 372
Fan Replacement (Procedure E) . . . 375
Fan Replacement (Procedure F) . . . 377
8.5 Replace the Drive . . . 384
About the Control Circuit Terminal Block . . . 384
Drive Replacement . . . 384
8.6 Replace the Keypad Battery . . . 390
8.7 Storage Guidelines . . . 392

9. Disposal . . . 393
9.1 Section Safety . . . 394
9.2 Disposal Instructions . . . 395

10. Specifications . . . 397
10.1 Section Safety . . . 398

10.2 Model Specifications (Three-Phase 200 V Class) . . . 399
10.3 Model Specifications (Three-Phase 400 V Class) . . . 401
10.4 Drive Specifications . . . 403
10.5 Drive Derating . . . 405
Carrier Frequency Settings and Rated Current Values . . . 405
Altitude Derating . . . 406
10.6 Drive Exterior and Mounting Dimensions . . . 407
IP20/UL Open Type . . . 407
10.7 Peripheral Devices and Options . . . 415
11. Parameter List . . . 419
11.1 Section Safety . . . 420
11.2 How to Read the Parameter List . . . 421
11.3 Parameter Groups . . . 422
11.4 A: Initialization Parameters . . . 423
A1: Initialization . . . 423
A2: User Parameters . . . 424
11.5 b: Application . . . 427
b1: Operation Mode Selection . . . 427
b2: Magnetic Flux Compensation . . . 427
b4: Timer Function . . . 428
b6: Dwell Function . . . 428
b7: Droop Control . . . 428
b8: Energy Saving . . . 428
11.6 C: Tuning . . . 429
C1: Accel & Decel Ramp . . . 429
C2: Jerk Characteristics . . . 430
C3: Slip Compensation . . . 430
C4: Torque Compensation . . . 431
C5: Auto Speed Regulator (ASR) . . . 431
C6: Carrier Frequency . . . 432
11.7 d: References . . . 433
d1: Speed Reference . . . 433
d6: Field Forcing . . . 434
11.8 E: Motor Parameters . . . 435
E1: V/f Pattern for Motor 1 . . . 435
E2: Motor Parameters . . . 436
E3: V/f Pattern for Motor 2 . . . 436
E4: Motor 2 Parameters . . . 437
E5: PM Motor Settings . . . 437
11.9 F: Options . . . 439
F1: Encoder Option Setup . . . 439
F3: Digital Input Option . . . 442
F4: Analog Output Option . . . 443
F5: Digital Output Option . . . 444
F6: Communication Options . . . 444
11.10 H: Terminal Functions . . . 446
H1: Digital Inputs . . . 446
H1-xx: MFDI Setting Values . . . 447
H2: Digital Outputs . . . 452
H2-xx: MFDO Setting Values . . . 453
H3: Analog Inputs . . . 460
H3-xx: MFAI Setting Values . . . 461
H4: Analog Outputs . . . 462
H5: Serial Communication . . . 462

11.11 L: Protection Functions 464
L1: Motor Protection 464
L2: Undervoltage Detection 464
L3: Stall Prevention 465
L4: Speed Detection 465
L5: Automatic Fault Reset 466
L6: Torque Detection 466
L7: Torque Limit 467
L8: Drive Protection 467
11.12 n: Special Adjustment 469
n1: Hunting Prevention 469
n2: Auto Freq Regulator (AFR) 469
n5: Feed Forward Control 469
n6: Online Tuning 470
n8: PM Motor Control Tuning 470
nA: PM Motor Control Tuning 471
11.13 o: Keypad-Related Settings 472
o1: Keypad Display 472
o2: Keypad Operation 474
o3: Copy Keypad Function 475
o4: Maintenance Monitors 475
o5: Log Function 477
11.14 S: Elevator Parameters 479
S1: Brake/Contactor Sequence 479
S2: Elevator Slip Compensation 479
S3: Start/Stop Optimization 480
S4: Rescue Operation 481
S5: Elevator Functionality 482
S6: Elevator Error Detection 484
11.15 T: Auto-Tuning 486
T0: Tuning Mode Selection 486
T1: Induction Motor Auto-Tuning 486
T2: PM Motor Auto-Tuning 487
11.16 U: Monitors 488
U1: Operation Status Monitors 488
U2: Fault Trace 490
U3: Fault History 493
U4: Maintenance Monitors 494
U6: Operation Status Monitors 499
U9: Fault Trace 501
11.17 Parameters that Change from the Default Settings with A1-02 [Control Method Selection] 504
11.18 Parameters Changed by E1-03 [V/f Pattern Selection] 506
11.19 Defaults by Drive Model 507
11.20 Defaults and Setting Ranges Changed by o1-03 [Speed Display Unit Selection] 513
12. Parameter Details 515
12.1 Section Safety 516
12.2 A: Initialization Parameters 517
A1: Initialization 517
A2: User Parameters 521
12.3 b: Application 523
b1: Operation Mode Selection 523
b2: Magnetic Flux Compensation 528
b4: Timer Function 528

b6: Dwell Function . . . 529
b7: Droop Control . . . 530
b8: Energy Saving . . . 531
12.4 C: Tuning . . . 534
C1: Accel & Decel Ramp . . . 534
C2: Jerk Characteristics . . . 539
C3: Slip Compensation . . . 540
C4: Torque Compensation . . . 542
C5: Auto Speed Regulator (ASR) . . . 543
C6: Carrier Frequency . . . 548
12.5 d: References . . . 550
d1: Speed Reference . . . 550
d6: Field Forcing . . . 555
12.6 E: Motor Parameters . . . 556
E1: V/f Pattern for Motor 1 . . . 556
E2: Motor Parameters . . . 558
E3: V/f Pattern for Motor 2 . . . 561
E4: Motor 2 Parameters . . . 562
E5: PM Motor Settings . . . 564
12.7 F: Options . . . 567
F1: Encoder Option Setup . . . 567
F3: Digital Input Option . . . 576
F4: Analog Output Option . . . 581
F5: Digital Output Option . . . 583
F6: Communication Options . . . 586
12.8 H: Terminal Functions . . . 589
H1: Digital Inputs . . . 589
MFDI Setting Values . . . 594
H2: Digital Outputs . . . 603
MFDO Setting Values . . . 605
H3: Analog Inputs . . . 619
MFAI Setting Values . . . 623
H4: Analog Outputs . . . 624
H5: Serial Communication . . . 627
12.9 L: Protection Functions . . . 632
L1: Motor Protection . . . 632
L2: Undervoltage Detection . . . 637
L3: Stall Prevention . . . 637
L4: Speed Detection . . . 639
L5: Automatic Fault Reset . . . 640
L6: Torque Detection . . . 642
L7: Torque Limit . . . 645
L8: Drive Protection . . . 647
12.10 n: Special Adjustment . . . 654
n1: Hunting Prevention . . . 654
n2: Auto Freq Regulator (AFR) . . . 655
n5: Feed Forward Control . . . 656
n6: Online Tuning . . . 658
n8: PM Motor Control Tuning . . . 658
nA: PM Motor Control Tuning . . . 662
12.11 o: Keypad-Related Settings . . . 663
o1: Keypad Display . . . 663
o2: Keypad Operation . . . 669
o3: Copy Keypad Function . . . 671
o4: Maintenance Monitors . . . 673
o5: Log Function . . . 679
12.12 S: Elevator Parameters . . . 685

S1: Brake/Contactor Sequence 685
S2: Elevator Slip Compensation 687
S3: Start/Stop Optimization 688
S4: Rescue Operation 693
S5: Elevator Functionality 696
S6: Elevator Error Detection 707
12.13 T: Auto-Tuning 711
T0: Tuning Mode Selection 711
T1: Induction Motor Auto-Tuning 711
T2: PM Motor Auto-Tuning 713
Index 717
Revision History 725

i

Preface and General Precautions

This chapter gives information about important safety precautions for the use of this product. Failure to obey these precautions can cause serious injury or death, and damage to the product or related devices and systems. Yaskawa must not be held responsible for any injury or equipment damage as a result of the failure to observe these precautions and instructions.

i.1 Receiving 14
i.2 Using the Product Safely 15
i.3 Warranty Information 20

i.1 Receiving

These instructions contain the information necessary to use the product correctly. Read and understand the safety information and precautions before you start to use the product.

◆ Glossary

Phrase	Definition
CLV	Closed Loop Vector Control
CLV/PM	Closed Loop Vector Control for Permanent Magnet Motors
Drive	YASKAWA AC Drive ES700
EDM	External Device Monitor
IPM motor	Interior Permanent Magnet Motor
MFAI	Multi-Function Analog Input
MFAO	Multi-Function Analog Output
MFDI	Multi-Function Digital Input
MFDO	Multi-Function Digital Output
OLV	Open Loop Vector Control
PM motor	Permanent Magnet Synchronous Motor (generic name for IPM motors and SPM motors)
SIL	Safety Integrity Level
SPM motor	Surface Permanent Magnet Motor
V/f	V/f Control

■ Icons to Identify Screw Shapes

Table i.1 Icons to Identify Screw Shapes

Icon	Screw Shape
	Phillips/slot combo (+/-)
	Slotted (-)
	Minus (-)
	Hex bolt (cross-slotted)
	Hex bolt (slotted)

Icon	Screw Shape
	Hex self-locking nut
	Hex socket cap (WAF: 5 mm)
	Hex socket cap (WAF: 6 mm)
	Hex socket cap (WAF: 8 mm)

◆ About Registered Trademarks

- CANopen is a registered trademark of CAN in Automation (CIA).
- EnDat is a trademark of HEIDENHAIN Corporation.
- HIPERFACE is a trademark of SICK STEGMANN GmbH & Co., KG.
- Other company names and product names in this document are trademarks or registered trademarks of the respective companies.

i.2 Using the Product Safely

◆ Explanation of Signal Words

⚠WARNING

Read and understand this manual before you install, operate, or do maintenance on the drive. Install the drive as specified by this manual and local codes.

The symbols in this section identify safety messages in this manual. If you do not obey these safety messages, the hazards can cause damage to the products and related equipment and systems, serious injury, or death.

These identifier words categorize and emphasize important safety precautions in these instructions.

⚠DANGER

This signal word identifies a hazard that will cause serious injury or death if you do not prevent it.

⚠WARNING

This signal word identifies a hazard that can cause death or serious injuries if you do not prevent it.

⚠CAUTION

This signal word identifies a hazard that can cause minor or moderate injuries if you do not prevent it.

NOTICE

This signal word identifies a property damage message that is not related to personal injury.

◆ Section Safety

General Precautions

- Some figures in the instructions include options and drives without covers or safety shields to more clearly show the inside of the drive. Replace covers and shields before operation. Use options and drives only as specified by the instructions.
- The figures in this manual are examples only. All figures do not apply to all products included in this manual.
- Yaskawa can change the products, specifications, and content of the instructions without notice to make the product and/or the instructions better.
- If you damage or lose these instructions, contact Yaskawa or your nearest sales representative and tell them the document number to order new copies.

⚠DANGER

Do not ignore the safety messages in this manual.

If you ignore the safety messages in this manual, it will cause serious injury or death. The manufacturer is not responsible for injuries or damage to equipment.

Electrical Shock Hazard

Do not examine, connect, or disconnect wiring on an energized drive. Before servicing, disconnect all power to the equipment and wait for the time specified on the warning label at a minimum. The internal capacitor stays charged after the drive is de-energized. The charge indicator LED extinguishes when the DC bus voltage decreases below 50 Vdc. When all indicators are OFF, remove the covers before measuring for dangerous voltages to make sure that the drive is safe.

If you do work on the drive when it is energized, it will cause serious injury or death from electrical shock.

⚠WARNING

Crush Hazard

Test the system to make sure that the drive operates safely after you wire the drive and set parameters.

If you do not test the system, it can cause serious injury or death.

Sudden Movement Hazard

Always turn OFF the Up/Down command before you change *b1-01 [Speed Reference Selection 1]*, *d1-18 [Speed Reference Selection Mode]*, or *H1-xx [MFDI Function Selection]*.

If the Up/Down command is ON when you change these parameter settings, the motor can unexpectedly start to run and cause serious injury or death.

Remove all personnel and objects from the area around the drive, motor, and machine and attach covers, couplings, shaft keys, and machine loads before you energize the drive.

If personnel are too close or if there are missing parts, it can cause serious injury or death.

Make sure that the elevator is not occupied when you do elevator test operations or drive setup.

If the elevator test operations or drive setup are incorrect and the elevator does not stop accurately, it can cause serious injury or death.

Make sure that you correctly set and test these parameters before you operate an occupied elevator:

- **Speed ratio parameters (*o1-18 [Speed of Elevator Car]* and *o1-19 [Elevator Motor Speed]*) or mechanical parameters (*o1-20 [Sheave Diameter]*, *o1-21 [Roping Ratio]*, and *o1-22 [Mechanical Gear Ratio]*)**
- ***S5-11 [Deceleration Distance@High Speed]* and *S5-12 [Up Stopping Distance]***

If you do not set these parameters correctly and the elevator does not stop accurately, it can cause serious injury or death.

Make sure that all units and values set for *o1-20 [Sheave Diameter]*, *S5-11 [Deceleration Distance@High Speed]*, and *S5-12 [Up Stopping Distance]* are correct before you use Stop Distance Control.

Incorrect settings can cause serious injury or death from elevator car overrun.

Verify the maximum drive output frequency before you apply an Up/Down command.

The drive can run the motor at high speeds. If the maximum drive output frequency is incorrect, it can cause serious injury or death.

Make sure that *b1-03 = 0 [Stopping Method Selection = Ramp to Stop]* before you apply an Up/Down command.

If $b1\text{-}03 \neq 0$ when you apply an Up/Down command, it can cause serious injury or death from elevator free-fall when you remove the Up/Down command.

Correctly set an Emergency Stop ramp to *C1-09 [Emergency Stop Ramp]* to make sure that the motor stops quickly and safely when you use the Emergency Stop function.

Rapid deceleration can trigger an overvoltage fault. If the drive detects an overvoltage fault, the drive output shuts off and the motor coasts. This uncontrolled motor state can cause serious injury or death.

Do not use the Automatic Fault Reset function when the application must not automatically recover after an error.

Incorrect application of the function can cause serious injury or death.

Use the MFDO signal set for *H2-xx = 61 [Pole Position Detection Complete]* to interlock the brake to make sure that the drive completes Pole Position Detection before it releases the brake.

If the drive releases the brake too soon, the pull of the counterweight can move the elevator and cause serious injury or death.

⚠WARNING

Use *S1-12 [Output Contactor During Autotune]* to enable and disable automatic switching of the *Motor Contactor Control* output signal during Auto-Tuning. Before you set *S1-12 = 1 or 2 [Enable or Enabled during A-Tuning and STo]*, make sure that you correctly wire the MFDO terminals set for *H2-xx = 51 [MFDO Function Selection = Motor Contactor Control]* and make sure that they are in the correct state.

Incorrect setting procedures can cause serious injury or death.

Electrical Shock Hazard

Do not modify the drive body or drive circuitry.

Modifications to drive body and circuitry can cause serious injury or death, will cause damage to the drive, and will void the warranty. Yaskawa is not responsible for modifications of the product made by the user.

Only let approved personnel install, wire, maintain, examine, replace parts, and repair the drive.

If personnel are not approved, it can cause serious injury or death.

Do not remove covers or touch circuit boards while the drive is energized.

If you touch the internal components of an energized drive, it can cause serious injury or death.

After the drive blows a fuse or trips an ELCB, do not immediately energize the drive or operate peripheral devices. Wait for the time specified on the warning label at a minimum and make sure that all indicators are OFF. Then check the wiring and peripheral device ratings to find the cause of the problem. If you do not know the cause of the problem, contact Yaskawa before you energize the drive or peripheral devices.

If you do not fix the problem before you operate the drive or peripheral devices, it can cause serious injury or death.

Damage to Equipment

Do not apply incorrect voltage to the main circuit of the drive. Operate the drive in the specified range of the input voltage on the drive nameplate.

Voltages that are higher than the permitted nameplate tolerance can cause damage to the drive.

Fire Hazard

Install sufficient branch circuit short circuit protection as specified by applicable codes and this manual. The drive is suitable for circuits that supply not more than 100,000 RMS symmetrical amperes, 240 Vac maximum (200 V Class), 480 Vac maximum (400 V Class).

Incorrect branch circuit short circuit protection can cause serious injury or death.

Remove the insulation from the connection wire ends to the length shown in “Wire Stripping Length”.

If you pinch the insulation in the wire terminals, it can cause serious injury or death from fire.

Make sure that there are no loose stranded wires or frayed wires in the wire core after wiring is complete.

Loose stranded wires or frayed wires in the wire core can create a short circuit and cause serious injury or death from electrical shock or fire.

⚠CAUTION

Crush Hazard

Tighten terminal cover screws and hold the case safely when you move the drive.

If the drive or covers fall, it can cause moderate injury.

NOTICE

Use an inverter-duty motor or vector-duty motor with reinforced insulation and windings applicable for use with an AC drive.

If the motor does not have the correct insulation, it can cause a short circuit or ground fault from insulation deterioration.

Damage to Equipment

When you touch the drive and circuit boards, make sure that you observe correct electrostatic discharge (ESD) procedures.

If you do not follow procedures, it can cause ESD damage to the drive circuitry.

Do not do a withstand voltage test or use a megohmmeter or megger insulation tester on the drive.

These tests can cause damage to the drive.

Do not energize and de-energize the drive more frequently than one time each 5 minutes (48 times/day maximum).

If you frequently energize and de-energize the drive, it can cause drive failure.

Do not use the Rescue Operation function for long lengths of time.

The low DC bus voltage during Rescue Operation can stop the internal cooling fans of the drive. If you use the Rescue Operation function for a long length of time, it can trigger an *oH [Heatsink Overheat]* fault and can cause damage to the drive.

Do not operate a drive or connected equipment that has damaged or missing parts.

You can cause damage to the drive and connected equipment.

Do not use steam or other disinfectants to fumigate wood for packaging the drive. Use alternative methods, for example heat treatment, before you package the components.

Gas from wood packaging fumigated with halogen disinfectants, for example fluorine, chlorine, bromine, iodine or DOP gas (phthalic acid ester), can cause damage to the drive.

When the drive is using the Rescue Operation power supply, wait at least 5 seconds after you change parameter settings before you turn OFF the power supply.

If you turn OFF the power supply too soon, it can corrupt the parameter settings and cause incorrect drive performance. You must initialize the drive to resolve the problem.

◆ Warning Label Content and Location

The drive warning label is in the location shown in Figure i.1. Use the drive as specified by this information.



A - Warning label

Figure i.1 Warning Label Content and Location

i.3 Warranty Information

◆ Exclusion of Liability

- This product is not designed and manufactured for use in life-support machines or systems.
- Contact a Yaskawa representative or your Yaskawa sales representative if you are considering the application of this product for special purposes, such as machines or systems used for passenger cars, medicine, airplanes and aerospace, nuclear power, electric power, or undersea relaying.

⚠WARNING

Injury to Personnel

When you use this product in applications where its failure could cause the loss of human life, a serious accident, or physical injury, you must install applicable safety devices.

If you do not correctly install safety devices, it can cause serious injury or death.

1

Receiving

This chapter gives information about the different drive models and features, and how to examine the drive after you receive it.

1.1 Section Safety 22
1.2 Model Number and Nameplate Check 23
1.3 Features and Advantages of Control Methods 26

1.1 Section Safety

⚠DANGER

Do not ignore the safety messages in this manual.

If you ignore the safety messages in this manual, it will cause serious injury or death. The manufacturer is not responsible for injuries or damage to equipment.

1.2 Model Number and Nameplate Check

◆ When Receiving the Drive

Please examine these items after you receive the drive:

- Examine the drive for damage. Immediately contact the shipping company if the drive is damaged. The Yaskawa warranty does not cover damage from shipping.
- Examine the drive model number to make sure that you received the correct model. Examine the model number in the “MODEL” section of the drive nameplate to make sure that you received the correct model.
- If you received a product different than you ordered or a product with a defect, contact Yaskawa or your nearest sales representative.

◆ Nameplate

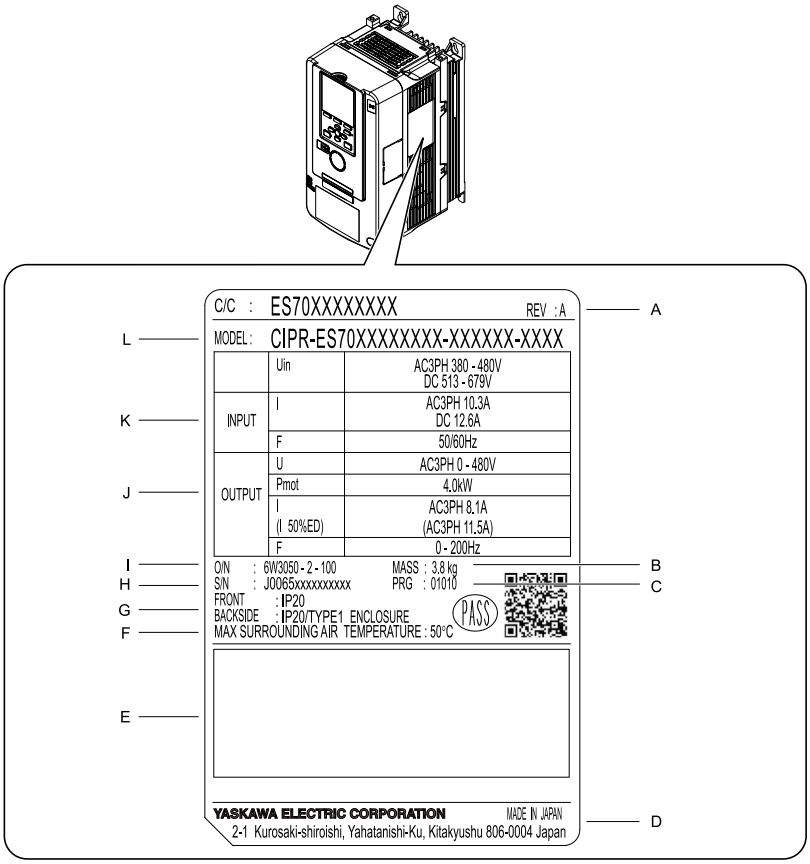

A - Hardware revision
B - Weight
C - Drive software version
D - The address of the head office of Yaskawa Electric Corporation
E - Accreditation standards
F - Surrounding air temperature
G - Protection design
H - Serial number
I - Lot number
J - Output specifications
K - Input specifications
L - Drive model

Figure 1.1 Nameplate Information Example

◆ Model Number

Use the information in Figure 1.2 and Table 1.1 to read the drive model numbers.

CIPR-	ES70	B	4	012	A	B	A	A	-	G	A	A	A	A	A
1	2	3	4	5	6	7	8	9		10	11	12	13	14	15

Figure 1.2 Drive Model

Table 1.1 Model Number Details

No.	Description
1	Drive
2	Product series
3	Region code B: China
4	Input power supply voltage • 2: Three-Phase AC 200 V Class • 4: Three-Phase AC 400 V Class
5	50% ED output current **Note:** Refer to the tables for the rated output current by model.
6	EMC noise filter • A: No internal EMC filter • C: Internal category C2 EMC filter
7	Enclosure protection design B: IP20/UL Open Type
8	Environmental specification A: Standard
9	Design revision order
10	Control circuit terminal board G: Screw clamp terminal board type
11	Option (connector CN5-A) (Reserved)
12	Option (connector CN5-B) (Reserved)
13	Option (connector CN5-C) (Reserved)
14	Keypad (Reserved)
15	Special applications (Reserved)

◆ Rated Output Current

Table 1.2 and Table 1.3 give the rated output current values.

Note:
• These output current values are applicable for drives that operate at standard specifications.
• Derate the current in applications that increase the carrier frequency.

Table 1.2 Three-Phase AC 200 V Class

Model	Maximum Applicable Motor Output kW	Continuous Rated Output Current *1 A	50% ED Output Current *1 A
2022	3.7	15.3	21.9
2031	5.5	21.9	31.3
2041	7.5	28.9	41.3
2059	11	41.1	58.8
2075	15	52.5	75.0
2094	18.5	65.6	93.8
2110	22	77.0	110.0
2144	30	100.6	143.8
2181	37	126.9	181.3
2225	45	157.5	225.0
2269	55	188.1	268.8
2354	75	247.6	353.8
2432	90	302.4	432.0
2519	110	363.2	518.8

*1 These values assume there is no carrier frequency derating.

Table 1.3 Three-Phase AC 400 V Class

Model	Maximum Applicable Motor Output kW	Continuous Rated Output Current *1 A	50% ED Output Current *1 A
4012	3.7	8.1	11.5
4019	5.5	13.0	18.5
4023	7.5	15.8	22.5
4030	11	21.0	30.0
4039	15	27.1	38.8
4049	18.5	34.1	48.8
4056	22	39.4	56.3
4075	30	52.5	75.0
4094	37	65.6	93.8
4114	45	79.6	113.8
4140	55	98.0	140.0
4188	75	131.3	187.5
4225	90	157.5	225.0
4270	110	189.0	270.0
4325	132	227.5	325.0
4380	160	266.0	380.0

*1 These values assume there is no carrier frequency derating.

1.3 Features and Advantages of Control Methods

This drive has 4 available control methods from which you can select for different applications. Table 1.4 gives information about the features of each control method.

Table 1.4 Features and Advantages of Control Methods

Control Method Selection	Open Loop V/f Control (V/f)	Open Loop Vector (OLV)	Closed Loop Vector (CLV)	PM Closed Loop Vector Control (CLV/PM)	Notes
Controlled Motor	**Induction Motor**			**PM Motor**	**-**
Parameter Settings	A1-02 = 0	A1-02 = 2 (Default)	A1-02 = 3	A1-02 = 7	-
Basic Control	V/f	Open Loop Current Vector Control	Closed Loop Current Vector Control	PM Closed Loop Current Vector Control (with speed controller)	-
Main Applications	General-purpose variable speed control	• General-purpose variable speed control • Applications in which high performance is necessary without machine encoders	Very high-performance control with motor encoders Example: High-precision speed control, torque limits	Very high-performance PM motor control with motor encoders Example: High-precision speed control, torque limits	-
Encoder Option Card	Not necessary	Not necessary	Necessary (PG-B3 or PG-X3)	Necessary (PG-B3, PG-X3, PG-F3, or PG-E3)	-
Maximum Output Frequency	200 Hz	200 Hz	200 Hz	200 Hz	-
Speed Control Range	1:40	1:200	1:1500	1:1500	This is the range of variable control. When you connect and operate motors in this mode, think about the increase in motor temperature.
Starting Torque	150% / 3 Hz	200% / 0.3 Hz *1*	200% / 0 min^{-1} *1*	200% / 0 min^{-1} *1*	This is the motor torque that the drive can supply at low speed during start-up and the related output frequency (rotation speed). When a large quantity of torque is necessary at low speed, you must think about drive capacity and motor capacity.
Auto-Tuning *2*	Rotational and Stationary (usually not necessary)	Rotational and Stationary	Rotational and Stationary	Stationary, Z-phase, Encoder, and Rotational	Automatically tunes electrical motor parameters.
Torque Limits *2*	No	Yes	Yes	Yes	Controls maximum motor torque to prevent damage to machines and loads.
Automatic Energy-saving Control *2*	No	No	No	Yes (IPM motors only)	Automatically adjusts the voltage that the drive applies to the motor to maximize motor efficiency for small and large loads.
Feed Forward Control *2*	No	No	Yes	Yes	Compensates effects of the system inertia to increase the speed precision when the load changes.
DC Injection Braking at Start and Stop/Position Lock	Yes (DC injection braking at start and stop)	Yes (DC injection braking at start and stop)	Yes (Position Lock)	Yes (Position Lock)	Builds up motor torque during stop to prevent movement of the elevator when the brake is released at start and applied at stop.
Torque Compensation	No	No	Yes	Yes	Prevents roll back at start using the analog signal from an external load cell connected to the drive.
Anti-Roll Back	No	No	Yes	Yes	Prevents roll back at start without any external load signal. When you use this function, adjust the position lock parameters in *C5-xx*, *S3-xx*.
Slip Compensation	No	Yes	Yes	No	Adjusts the leveling speed reference to improve the stopping accuracy.
Short Floor	Yes	Yes	Yes	Yes	Automatically adjusts the speed to decrease the operation time at the leveling speed when the leveling reference is input before the motor speed reaches the nominal speed.

*1 Select the drive capacity and motor capacity correctly for the application.

*2 When you can decouple the motor and machine (remove rope from the traction sheave) for a test run, use Stationary Auto-Tuning, then use Rotational Auto-Tuning. You must make adjustments to the control in the range where there is no vibration in the machine after Rotational Auto-Tuning.

2

Mechanical Installation

This chapter gives information about the correct environment and clearances to install the drive.

2.1 Section Safety 28
2.2 Installation Environment 30
2.3 Installation Position and Clearances 31
2.4 Moving the Drive 33
2.5 Drive Watt Loss 35
2.6 Remove and Reattach the Keypad 37
2.7 Install the Keypad in a Control Panel or Another Device 38
2.8 Removing/Reattaching Covers 43
2.9 Installation Methods 48

2.1 Section Safety

⚠WARNING

Electrical Shock Hazard

Only let approved personnel install, wire, maintain, examine, replace parts, and repair the drive.

If personnel are not approved, it can cause serious injury or death.

Do not modify the drive body or drive circuitry.

Modifications to drive body and circuitry can cause serious injury or death, will cause damage to the drive, and will void the warranty. Yaskawa is not responsible for modifications of the product made by the user.

Fire Hazard

Do not put flammable or combustible materials on top of the drive and do not install the drive near flammable or combustible materials. Attach the drive to metal or other noncombustible material.

Flammable and combustible materials can start a fire and cause serious injury or death.

When you install the drive in an enclosure, use a cooling fan or cooler to decrease the temperature around the drive. Make sure that the intake air temperature to the drive is 50 °C (122 °F) or less for IP20/UL Open Type drives.

If the air temperature to the drive is too hot, it can overheat the drive and cause death or serious injury from fire.

Crush Hazard

Only approved personnel can operate a crane or hoist to move the drive.

If unapproved personnel operate a crane or hoist, it can cause serious injury or death from falling equipment.

Before you hang the drive vertically, use screws to correctly attach the drive front cover and other drive components.

If you do not secure the front cover, it can fall and cause minor injury.

When you use a crane or hoist to lift the drive during installation or removal, prevent more than 1.96 m/s^2 (0.2 G) vibration or impact.

Too much vibration or impact can cause serious injury or death from falling equipment.

When you lift the drive during installation or removal, do not try to turn the drive over and do not ignore the hanging drive.

If you move a hanging drive too much or if you ignore it, the drive can fall and cause serious injury or death.

Use a crane or hoist to move large drives when necessary.

If you try to move a large drive without a crane or hoist, it can cause serious injury or death.

⚠CAUTION

Crush Hazard

Tighten terminal cover screws and hold the case safely when you move the drive.

If the drive or covers fall, it can cause moderate injury.

NOTICE

Do not let unwanted objects, for example metal shavings or wire clippings, fall into the drive during drive installation. Put a temporary cover over the drive during installation. Remove the temporary cover before start-up.

Unwanted objects inside of the drive can cause damage to the drive.

Damage to Equipment

When you touch the drive and circuit boards, make sure that you observe correct electrostatic discharge (ESD) procedures.

If you do not follow procedures, it can cause ESD damage to the drive circuitry.

Install vibration-proof rubber on the base of the motor or use the frequency jump function in the drive to prevent specific frequencies that vibrate the motor.

Motor or system resonant vibration can occur in fixed speed machines that are converted to variable speed. Too much vibration can cause damage to equipment.

You can use the drive with an explosion-proof motor, but the drive is not explosion-proof. Install the drive only in the environment shown on the nameplate.

If you install the drive in a dangerous environment, it can cause damage to the drive.

Do not lift the drive with the covers removed.

If the drive does not have covers, you can easily cause damage to the internal parts of the drive.

2.2 Installation Environment

The installation environment is important for the lifespan of the product and to make sure that the drive performance is correct. Make sure that the installation environment agrees with these specifications.

Environment	Conditions
Area of Use	Indoors
Power Supply	Overvoltage Category III
Surrounding Air Temperature	IP20/UL Open Type: -10 °C to +50 °C (14 °F to 122 °F) • When you install the drive in an enclosure, use a cooling fan or air conditioner to keep the internal air temperature in the permitted range. • Do not let the drive freeze.
Humidity	95% RH or less Do not let condensation form on the drive.
Storage Temperature	-20 °C to +70 °C (-4 °F to +158 °F) (short-term temperature during transportation)
Surrounding Area	Pollution degree 2 or less Install the drive in an area without: • Oil mist, corrosive or flammable gas, or dust • Metal powder, oil, water, or other unwanted materials • Radioactive materials or flammable materials, including wood • Harmful gas or fluids • Salt • Direct sunlight
Altitude	1000 m (3281 ft) maximum **Note:** Derate the output current by 1% for each 100 m (328 ft) to install the drive in altitudes between 1000 m to 4000 m (3281 ft to 13123 ft). It is not necessary to derate the rated voltage in these conditions: • When you install the drive at 2000 m (6562 ft) or lower • When you install the drive between 2000 m to 4000 m (6562 ft to 13123 ft) and ground the neutral point on the power supply. Contact Yaskawa or your nearest sales representative if you will not ground the neutral point.
Vibration *1	• 10 Hz to 20 Hz: 1 G (9.8 m/s², 32.15 ft/s²) • 20 Hz to 55 Hz: – 2022 to 2225, 4012 to 4188: 0.6 G (5.9 m/s², 19.36 ft/s²) – 2269 to 2519, 4225 to 4380: 0.2 G (2.0 m/s², 6.56 ft/s²)
Installation Orientation	Install the drive vertically for sufficient airflow to cool the drive.

*1 This drive passed the vibration test with a logarithmic sweep as specified by EN 60068-2-6 and JIS C60068-2-6. If the internal components of the drive vibrate too much, it can cause damage to the drive even when the vibration frequency is in the specification. If the drive components vibrate, improve the installation environment to decrease vibration.

- Put the motor on a rubber pad to decrease vibration.
- Reinforce the structure of the installation.

NOTICE

Do not let unwanted objects, for example metal shavings or wire clippings, fall into the drive during drive installation. Put a temporary cover over the drive during installation. Remove the temporary cover before start-up.
Unwanted objects inside of the drive can cause damage to the drive.

Note:

Do not put drive peripheral devices, transformers, or other electronics near the drive. Shield the drive from electrical interference if components must be near the drive. Electrical interference can cause the drive or devices around the drive to function incorrectly.

2.3 Installation Position and Clearances

Install the drive vertically for sufficient airflow to cool the drive.

Note:
Contact Yaskawa or a Yaskawa representative for more information about installing drive models on their side.

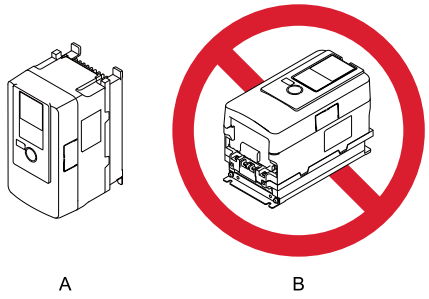

A - Vertical installation **B - Horizontal installation**

Figure 2.1 Installation Orientation

◆ Install Single Drive

Use the clearances specified in Figure 2.2 to install the drive. Make sure that there is sufficient space for wiring and airflow to cool the drive.

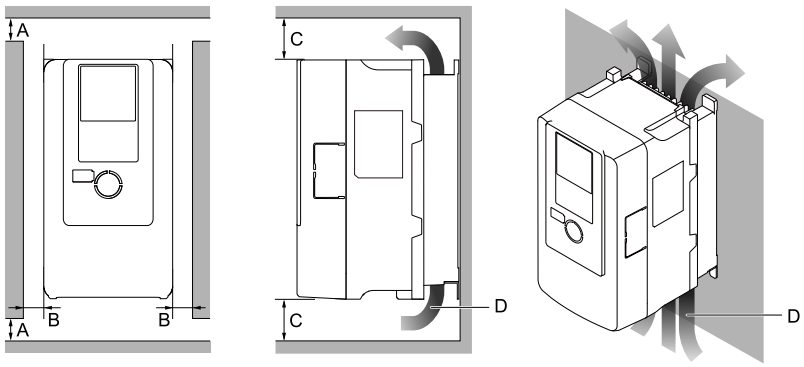

A - 50 mm (2 in) minimum
B - 30 mm (1.2 in) minimum on each side
C - 120 mm (4.7 in) minimum above and below
D - Airflow direction

Figure 2.2 Installation Clearances for One Drive

◆ External Heatsink Installation

The optional External Heatsink Installation Kit will let you install the drive with the cooling fins, which are the main heat-dissipating component of the drive, external to the enclosure panel.

Table 2.1 shows the model numbers for the drive and the attachment. Contact Yaskawa or your nearest sales representative to make an order.

Table 2.1 External Heatsink Installation Kit (Optional)

Drive Model	External Heatsink Installation Kit Model (No.)
2022 - 2041 4012 - 4023	900-193-209-001 (100-203-229)
2059 4030, 4039	900-193-209-002 (100-203-230)
2075, 2094 4049, 4056	900-193-209-003 (100-203-231)
2110 - 2519 4075 - 4380	*1

*1 When you install models 2110 to 2519 and 4075 to 4380 with external heatsink installation, use the mounting brackets supplied with the drive. Optional attachments are not necessary.

Refer to “External Heatsink Installation Installation Manual (TOxP C720600 03)” for more information about how to do an external heatsink installation. You can download manuals from the Yaskawa website.

2.4 Moving the Drive

Obey local laws and regulations when you move and install this product.

⚠ CAUTION Crush Hazard
Tighten terminal cover screws and hold the case safely when you move the drive.
If the drive or covers fall, it can cause moderate injury.

Drive Weight	Persons Necessary to Move the Drive
< 15 kg (33 lbs.)	1
≥ 15 kg (33 lbs.)	2 + using appropriate lifting equipment

Refer to *Using the Hanging Brackets to Move the Drive on page 33* for information about how to use suspension systems, wires, or hanging metal brackets to move the drive.

◆ Using the Hanging Brackets to Move the Drive

Use the hanging brackets attached to the drive to temporarily lift the drive when you install the drive to a control panel or wall or when you replace the drive. Do not let the drive stay vertically or horizontally suspended or move the drive over a long distance while it is suspended.

Before you install the drive, make sure that you read these precautions:

⚠ WARNING Crush Hazard
Before you hang the drive vertically, use screws to correctly attach the drive front cover and other drive components.
If you do not secure the front cover, it can fall and cause minor injury.

⚠ WARNING Crush Hazard
When you use a crane or hoist to lift the drive during installation or removal, prevent more than 1.96 m/s² (0.2 G) vibration or impact.
Too much vibration or impact can cause serious injury or death from falling equipment.

⚠ WARNING Crush Hazard
When you lift the drive during installation or removal, do not try to turn the drive over and do not ignore the hanging drive.
If you move a hanging drive too much or if you ignore it, the drive can fall and cause serious injury or death.

⚠ WARNING Crush Hazard
When you install the drive, do not hold the front cover. Install the drive with holding the heatsink.
If you hold the front cover, the cover will come off and the drive will fall, and can cause injury.

◆ Instructions on Drive Suspension

The procedures in this section show you how to use wires to suspend the drive.

Model	Suspension Method
2110 - 2519 4075 - 4380	Vertical Suspension
2144 - 2519 4094 - 4380	Allows horizontal suspension

■ Vertical Suspension

To vertically suspend the drive with the hanging brackets, follow this procedure to lift the drive:

1. Put wire through the 2 holes in the hanging brackets.

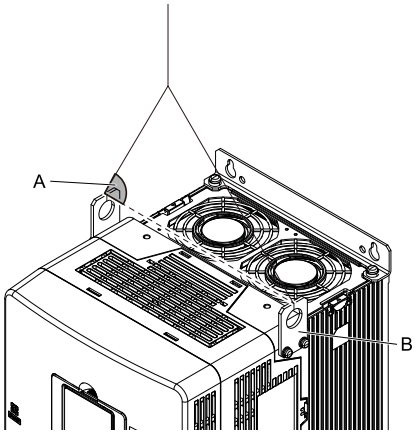

A - Suspension angle of at least 50 degrees **B - Hanging bracket (2)**

Figure 2.3 Vertical Suspension

2. Use a crane to gradually wind up the wire. Visually make sure that there is sufficient tension in the wire, then lift the drive to its correct location.
3. Prepare the control panel for installation, then lower the drive.

Note:
When you lower the drive, stop before the drive touches the floor, then slowly lower it the remaining distance.

■ Horizontal Suspension

If horizontal suspension is required in the installation environment, hang the drive through the following steps. Put the drive on the ground horizontally. Connect wires to the 4 hanging brackets and use a crane to lift the drive.

NOTICE

When you attach a horizontal lifting cable or chain to the drive, use a jig or pad between the wire and the drive.
The wire can scratch the drive and cause damage to the drive.

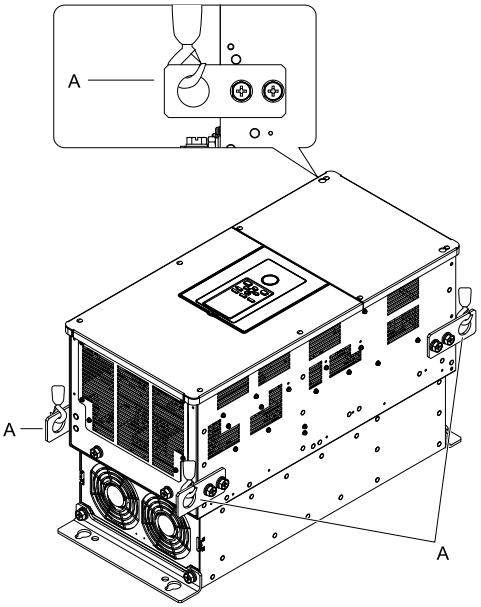

A - Hanging bracket (4)

Figure 2.4 Horizontal Suspension

2.5 Drive Watt Loss

◆ Drive Watt Loss (without Built-in EMC Filter)

■ Three-Phase 200 V Class

Model	Continuous Rated Output Current A	Carrier Frequency kHz	Interior Unit Loss W	Cooling Fin Loss W	Total Loss W
2022	15.3	8	61	136	197
2031	21.9	8	83	213	296
2041	28.9	8	107	241	348
2059	41.1	8	141	353	494
2075	52.5	8	189	500	689
2094	65.6	8	242	622	864
2110	77.0	8	248	769	1017
2144	100.6	8	374	1056	1429
2181	126.9	5	410	1117	1527
2225	157.5	5	421	1298	1719
2269	188.1	5	518	1648	2167
2354	247.6	5	662	2163	2824
2432	302.4	5	775	2594	3369
2519	363.2	5	846	3089	3936

■ Three-Phase 400 V Class

Model	Continuous Rated Output Current A	Carrier Frequency kHz	Interior Unit Loss W	Cooling Fin Loss W	Total Loss W
4012	8.1	8	36	70	106
4019	13	8	48	99	147
4023	15.8	8	58	126	183
4030	21	8	79	169	248
4039	27.1	8	95	231	327
4049	34.1	8	124	298	422
4056	39.4	8	145	358	503
4075	52.5	8	202	548	750
4094	65.6	5	209	565	774
4114	79.6	5	251	683	934
4140	98.0	5	291	851	1142
4188	131.3	5	408	1079	1487
4225	157.5	5	388	1225	1613
4270	189.0	5	483	1300	1782
4325	227.5	5	586	1760	2346
4380	266.0	5	696	2010	2706

◆ Drive Watt Loss (with Built-in EMC Filter)

■ Three-Phase 400 V Class

Model	Continuous Rated Output Current A	Carrier Frequency kHz	Interior Unit Loss W	Cooling Fin Loss W	Total Loss W
4012	8.1	8	36	70	106
4019	13	8	48	99	147
4023	15.8	8	58	126	183
4030	21	8	79	169	248
4039	27.1	8	95	231	327
4049	34.1	8	124	298	422
4056	39.4	8	145	358	503

2.6 Remove and Reattach the Keypad

NOTICE

You must remove the keypad before you remove or reattach the front cover. Before you reattach the keypad, make sure that you attach the front cover into position.
If you keep the keypad connected to the drive when you remove the front cover, it can cause an unsatisfactory connection and incorrect operation.

◆ Remove the Keypad

1. Push down the tab on the top of the keypad, then pull the keypad forward and remove it from the drive.

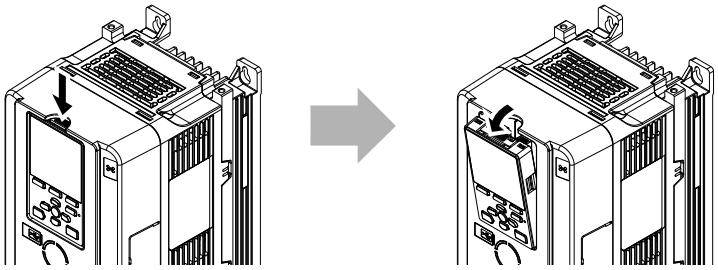

Figure 2.5 Remove the Keypad

2. Pull the keypad connector out from the drive horizontally, then put it in the holder.

Note:
Insert the end of the keypad connector that has the tab.

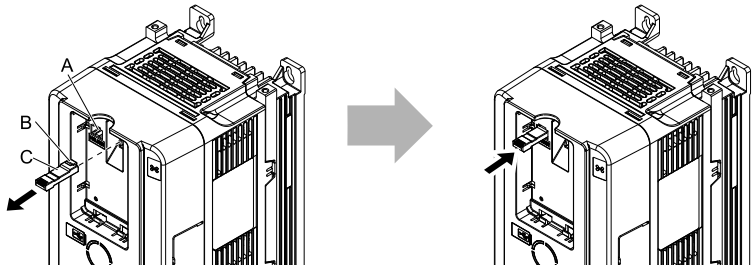

A - Holder
B - Hook
C - Keypad connector

Figure 2.6 Move the Keypad Connector to the Holder

◆ Reattach the Keypad

Insert the keypad connector to its initial position. Put the bottom of the keypad into position first, then carefully push on the top of the keypad until the hook clicks into place.

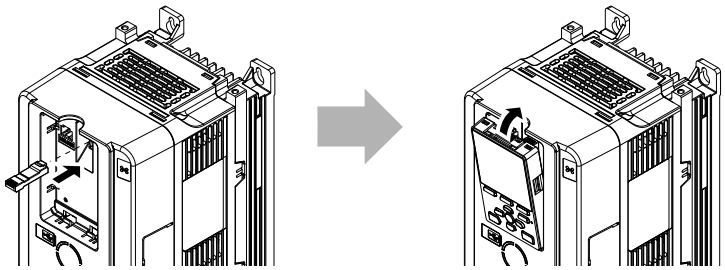

Figure 2.7 Reattach the Keypad

2.7 Install the Keypad in a Control Panel or Another Device

◆ Operate the Keypad from a Remote Location

You can remove the keypad from the drive and connect it to a remote control extension cable 3 m (9.8 ft) long to make operation easier when you cannot access the drive. It is not necessary to open or close the panel door to operate a drive that is in a control panel. To order optional accessories, contact Yaskawa or your nearest sales representative.

Name	Option Model	Intended Use
Keypad Remote Cable	WV001: 1 m (3.3 ft) WV003: 3 m (9.8 ft)	To connect the keypad and drive. This option is an RJ-45, 8-pin straight-through UTP CAT5e cable.
Installation Support Set A	900-192-933-001	To attach the keypad to the control panel. This option uses screws.
Installation Support Set B	900-192-933-002	To attach the keypad to the control panel. This option uses nut clamps. Use this option when weld studs are located in the control panel.

◆ Connect the Keypad from a Remote Location

Use the information in Table 2.2 to install the keypad in the best location for your application.

Table 2.2 Keypad Installation Method

Installation Method	Features	Necessary Tools and Installation Support Sets
Outside of the control panel	Simplified installation is possible. Separate installation support sets are not necessary.	Phillips screwdriver #2 (M3)
Inside of the control panel	Keypad does not extend farther than the front of the control panel.	• Phillips screwdriver #2 (M3, M4) • Installation support set A (for mounting with screws, model: 900-192-933-001)
		• Phillips screwdriver #2 (M3) • Wrench (M4) • Installation support set B (for mounting with nut clamp, model: 900-192-933-002)

Note:

Installation support sets are sold separately. If there are weld studs inside the control panel, use installation support set B. Contact Yaskawa or your nearest sales representative to make an order.

NOTICE

Do not let unwanted objects, for example metal shavings or wire clippings, fall into the drive during drive installation. Put a temporary cover over the drive during installation. Remove the temporary cover before start-up.
Unwanted objects inside of the drive can cause damage to the drive.

■ External Dimensions of Keypad

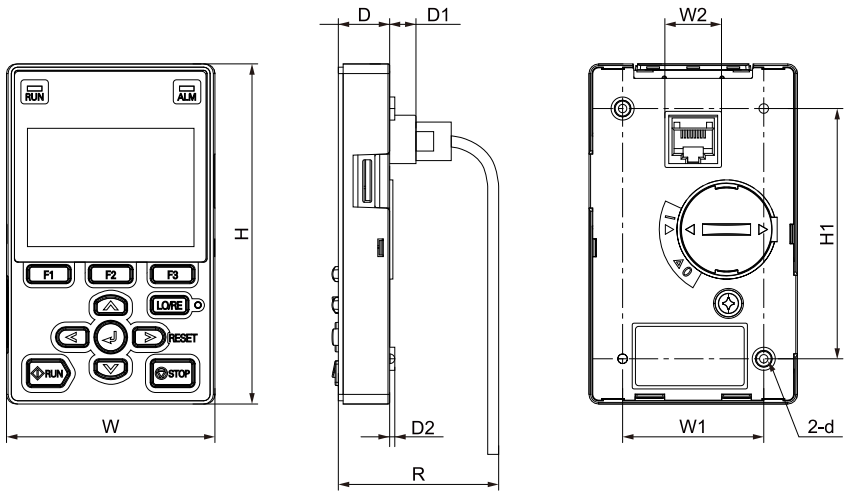

Figure 2.8 Exterior and Mounting Dimensions

Table 2.3 Exterior Dimensions (mm)

W	H	D	D1	D2	R *1	W1	W2	H1	d
65	106	16	8.2	1.6	53.8	44	15	78	M3

*1 Minimum bending radius

■ Mount to the Outside of Control Panel

1. Use the dimensions in Figure 2.9 and Table 2.4 to cut an opening in the control panel for the keypad.

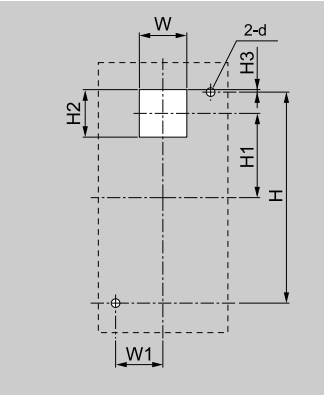

Figure 2.9 External/Face Mount Enclosure Panel Cut-Out Dimensions

Table 2.4 Panel Cut-Out Dimensions mm (in)

W	H	W1	H1	H2	H3	d
22 (0.89)	78 (3.07)	22 (0.89)	29 (1.14)	22 (0.89)	1 (0.04)	3.6 (0.14)

2. Remove the keypad and put the keypad connector in the holder on the front cover.

Note:
Insert the end of the keypad connector that has the tab.

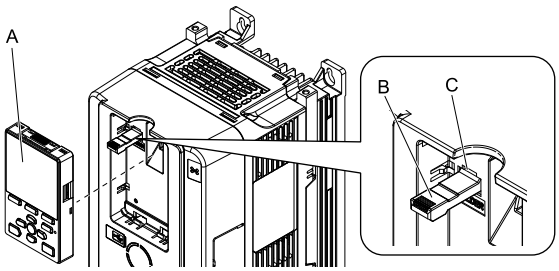

A - Keypad
B - Keypad connector
C - Holder

Figure 2.10 Remove the Keypad

3. Put the keypad on the outside of the control panel.

   Use M3 screws (6 mm (0.2 in) depth cross-recessed pan head screws) to attach the keypad from the inside. Tighten the screws to a correct tightening torque:

   - M3 screws: 0.49 N·m to 0.73 N·m (4.34 lbf·in to 6.46 lbf·in)

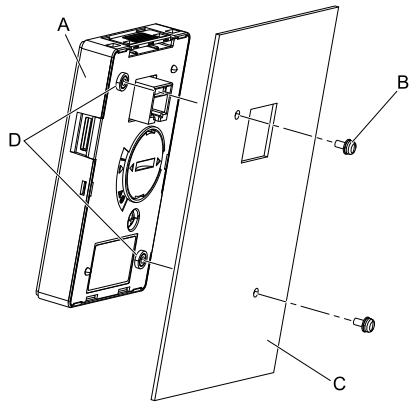

A - Keypad
B - M3 screws
C - Enclosure panel
D - Screw mounting holes

Figure 2.11 Mount to the Outside of Control Panel

4. Use the extension cable to connect the drive to the keypad.

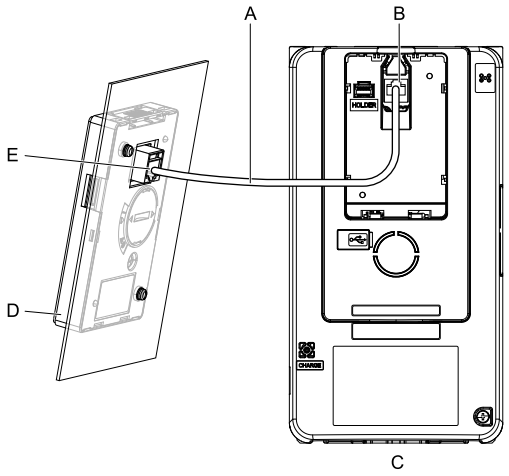

A - Extension cable
B - Communications connector
C - Drive
D - Keypad
E - Cable connector

Figure 2.12 Connect the Drive and Keypad with the Extension Cable

■ Mount to the Inside of Control Panel

Installation support sets A or B (sold separately) are necessary for Internal/Flush-Mount installation. To order optional accessories, contact Yaskawa or your nearest sales representative.

Note:
- The installation procedure and panel cut-out dimensions are the same for mounting brackets A and B.
- Use a gasket between the control panel and the keypad in environments with a large quantity of dust or other unwanted airborne material.

1. Use the dimensions in Figure 2.13 and Table 2.5 to cut an opening in the control panel for the keypad.

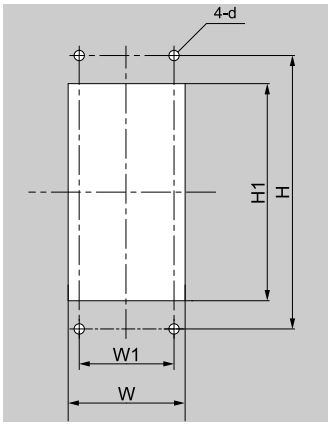

Figure 2.13 Panel Cut-Out Dimensions to Attach Inside Control Panel

Table 2.5 Panel Cut-Out Dimensions mm (in)

W	H	W1	H1	d
64 + 0.5 (2.52 + 0.02)	130 (5.12)	45 (1.77)	105 + 0.5 (4.13 + 0.02)	4.8 (0.12)

2. Remove the keypad and put the keypad connector in the holder on the front cover.

Note:
Insert the end of the keypad connector that has the tab.

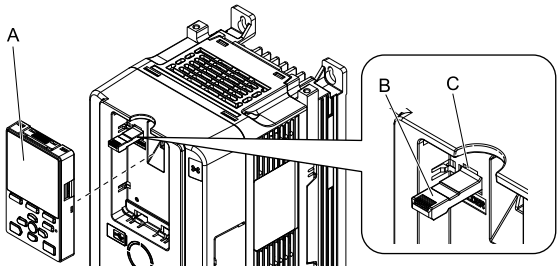

A - Keypad
B - Keypad connector
C - Holder

Figure 2.14 Remove the Keypad

3. Use the screws included with the mounting bracket, and attach the keypad to the mounting bracket.

   Use the screws included with the installation support set to attach it. Tighten the screws to a correct tightening torque:

   - M3 screws: 0.49 N·m to 0.73 N·m (4.34 lbf·in to 6.46 lbf·in)

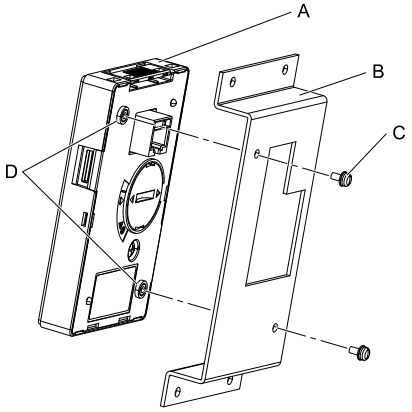

A - Keypad
B - Mounting bracket A
C - M3 screws
D - Screw mounting holes

Figure 2.15 Attach Keypad to Mounting Bracket

4. Put the mounting bracket that has the attached keypad in the control panel, and use the screws to attach it from the outside.

   Use the screws included with the installation support set to attach it. Tighten the screws to a correct tightening torque:

   • M4 screws: 0.98 N·m to 1.33 N·m (8.67 lbf·in to 11.77 lbf·in)

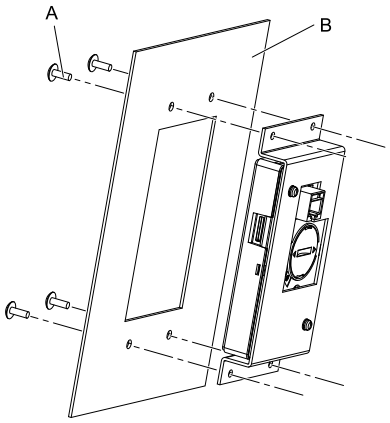

A - M4 screws **B - Enclosure panel**

Figure 2.16 Mount Mounting Bracket to the Interior of the Control Panel

5. Use the extension cable to connect the drive to the keypad.

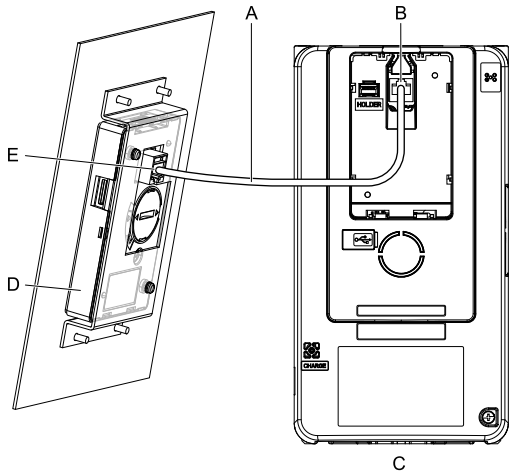

A - Extension cable **D - Keypad**
B - Communications connector **E - Cable connector**
C - Drive

Figure 2.17 Connect the Drive and Keypad with the Extension Cable

2.8 Removing/Reattaching Covers

This section gives information about how to remove and reattach the front cover and terminal cover for wiring and inspection.

⚠ DANGER Electrical Shock Hazard

Do not examine, connect, or disconnect wiring on an energized drive. Before servicing, disconnect all power to the equipment and wait for the time specified on the warning label at a minimum. The internal capacitor stays charged after the drive is de-energized. The charge indicator LED extinguishes when the DC bus voltage decreases below 50 Vdc. When all indicators are OFF, remove the covers before measuring for dangerous voltages to make sure that the drive is safe.
If you do work on the drive when it is energized, it will cause serious injury or death from electrical shock.

◆ Remove the Front Cover (Models: 2022 to 2225 and 4012 to 4188)

1. Remove the keypad and the keypad connector, then insert the end of the keypad connector that has the tab into the keypad connector holder on the front cover.

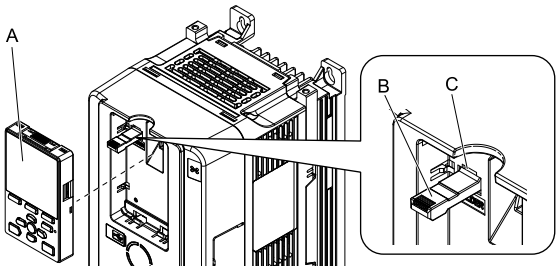

A - Keypad
B - Keypad connector
C - Holder

Figure 2.18 Remove the Keypad and Keypad Connector

2. Loosen the front cover screws.

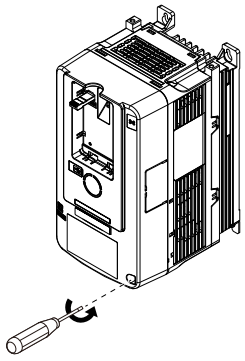

Figure 2.19 Loosen the Front Cover Screws

3. Push on the tab in the side of the front cover then pull the front cover forward to remove it from the drive.

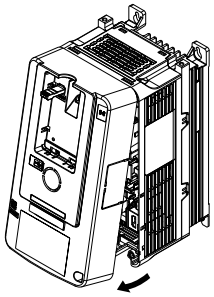

Figure 2.20 Remove the Front Cover

◆ Reattach the Front Cover (Models: 2022 to 2225 and 4012 to 4188)

1. Wire the drive and other peripheral devices.
2. Reverse the steps to reattach the cover.

Note:
- Wire the grounding terminals first, main circuit terminals next, and control circuit terminals last.
- Make sure that you do not pinch wires or signal lines between the front cover and the drive before you reattach the cover.
- Tighten the screws to a tightening torque of 0.98 N·m to 1.33 N·m (8.67 lbf·in to 11.77 lbf·in).

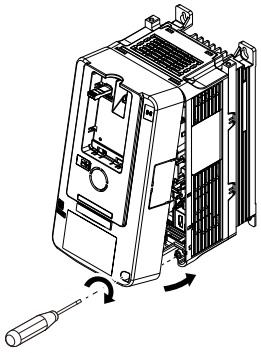

Figure 2.21 Reattach the Front Cover

3. Reattach the keypad to the original position.

◆ Remove the Front Cover (Models: 2269 to 2519 and 4225 to 4380)

1. Remove the terminal cover, keypad, and keypad connector, then insert the end of the keypad connector that has the tab into the keypad connector holder on the front cover.

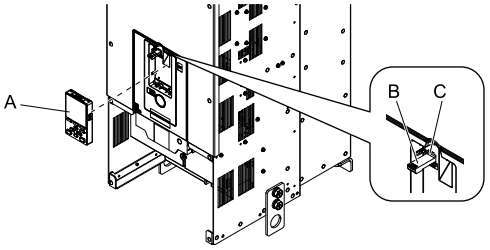

A - Keypad
B - Keypad connector
C - Holder

Figure 2.22 Remove the Terminal Cover, Keypad, and Keypad Connector

2. Loosen the front cover screws.

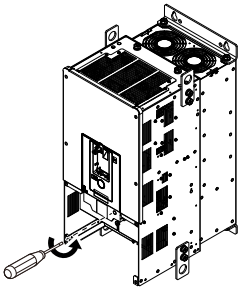

Figure 2.23 Loosen the Front Cover Screws

3. Push on the four tabs found on each side of the front cover, then pull the front cover forward to remove it from the drive.

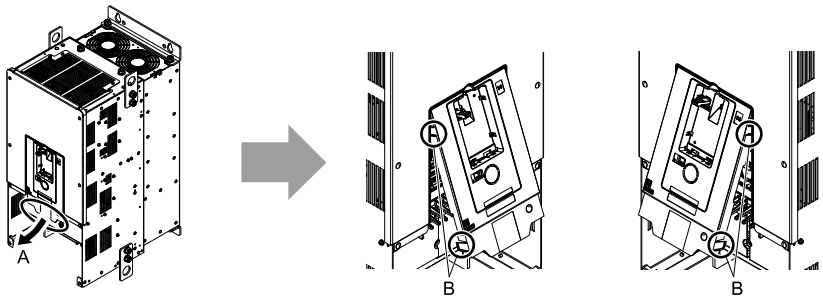

A - Pull forward to remove the front cover.

B - Unhook the tabs found on the sides of the front cover.

Figure 2.24 Pull Forward to Remove the Front Cover

4. Remove the front cover from the drive.

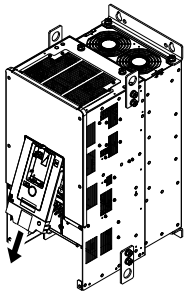

Figure 2.25 Remove the Front Cover

◆ Reattach the Front Cover (Models: 2269 to 2519 and 4225 to 4380)

Wire the drive and other peripheral devices, then reattach the front cover.

Note:
Wire the grounding terminals first, main circuit terminals next, and control circuit terminals last.

1. Move the front cover to connect the hooks at the top of the front cover to the drive.

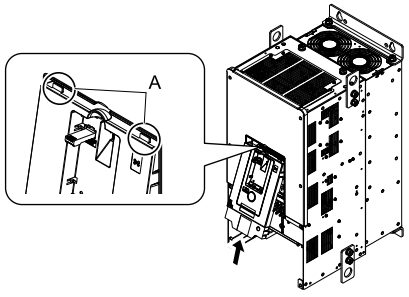

A - Hooks

Figure 2.26 Reattach the Front Cover

2. Move the front cover until it clicks into position while pushing on the hooks on the left and right sides of the front cover.

Note:
Make sure that you do not pinch wires or signal lines between the front cover and the drive before you reattach the cover.

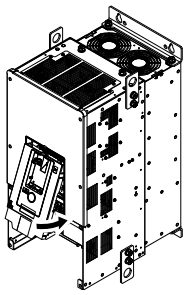

Figure 2.27 Reattach the Front Cover

3. Reattach the keypad to the original position.

◆ Remove the Terminal Cover (Models: 2269 to 2519 and 4225 to 4380)

1. Loosen the screws on the terminal cover, then pull down on the cover.

⚠ CAUTION Crush Hazard
Loosen the cover screws. Do not fully remove them.
If you fully remove the cover screws, the terminal cover can fall and cause moderate injury.

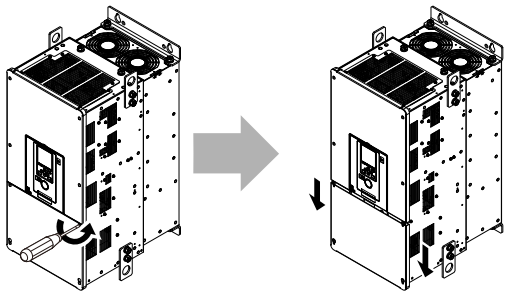

Figure 2.28 Loosen the Terminal Cover Mounting Screws

2. Pull the terminal cover away from the drive.

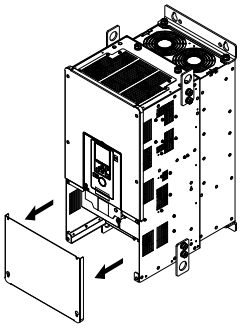

Figure 2.29 Remove the Terminal Cover

◆ Reattach the Terminal Cover (Models: 2269 to 2519 and 4225 to 4380)

Wire the drive and other peripheral devices then reattach the terminal cover.

Note:
- Wire the grounding terminals first, main circuit terminals next, and control circuit terminals last.
- Make sure that you do not pinch wires or signal lines between the wiring cover and the drive before you reattach the cover.
- Tighten the screws to a tightening torque of 0.98 N·m to 1.33 N·m (8.67 lbf·in to 11.77 lbf·in).

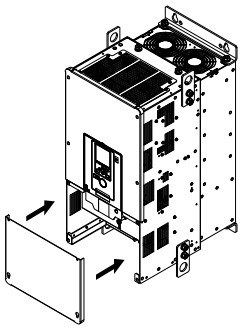

Figure 2.30 Reattach the Terminal Cover

2.9 Installation Methods

The drive installation methods include standard installation and external heatsink installation.

◆ Standard Installation

Refer to *Drive Exterior and Mounting Dimensions on page 407* for more information about external dimensions and installation methods.

◆ External Heatsink Installation

Refer to Table 2.7 and Table 2.8 for the panel cut-out dimensions for external heatsink installations. An attachment is necessary to install drive models smaller than 2094 (200 V class) and 4056 (400 V class) with the heatsink outside of the panel.

Note:
- The exterior mounting dimensions and installation dimensions for a standard installation are different than the dimensions for an external heatsink installation.
- The shaded parts of the panel cut-out dimensions are the gasket dimensions. Make sure that the gasket is not smaller than the specified dimension.

Table 2.6 External Heatsink Installation Kit

Drive Model	Model
2022 - 2041 4012 - 4023	900-193-209-001
2059 4030, 4039	900-193-209-002
2075, 2094 4049, 4056	900-193-209-003
2110 - 2519 4075 - 4380	-

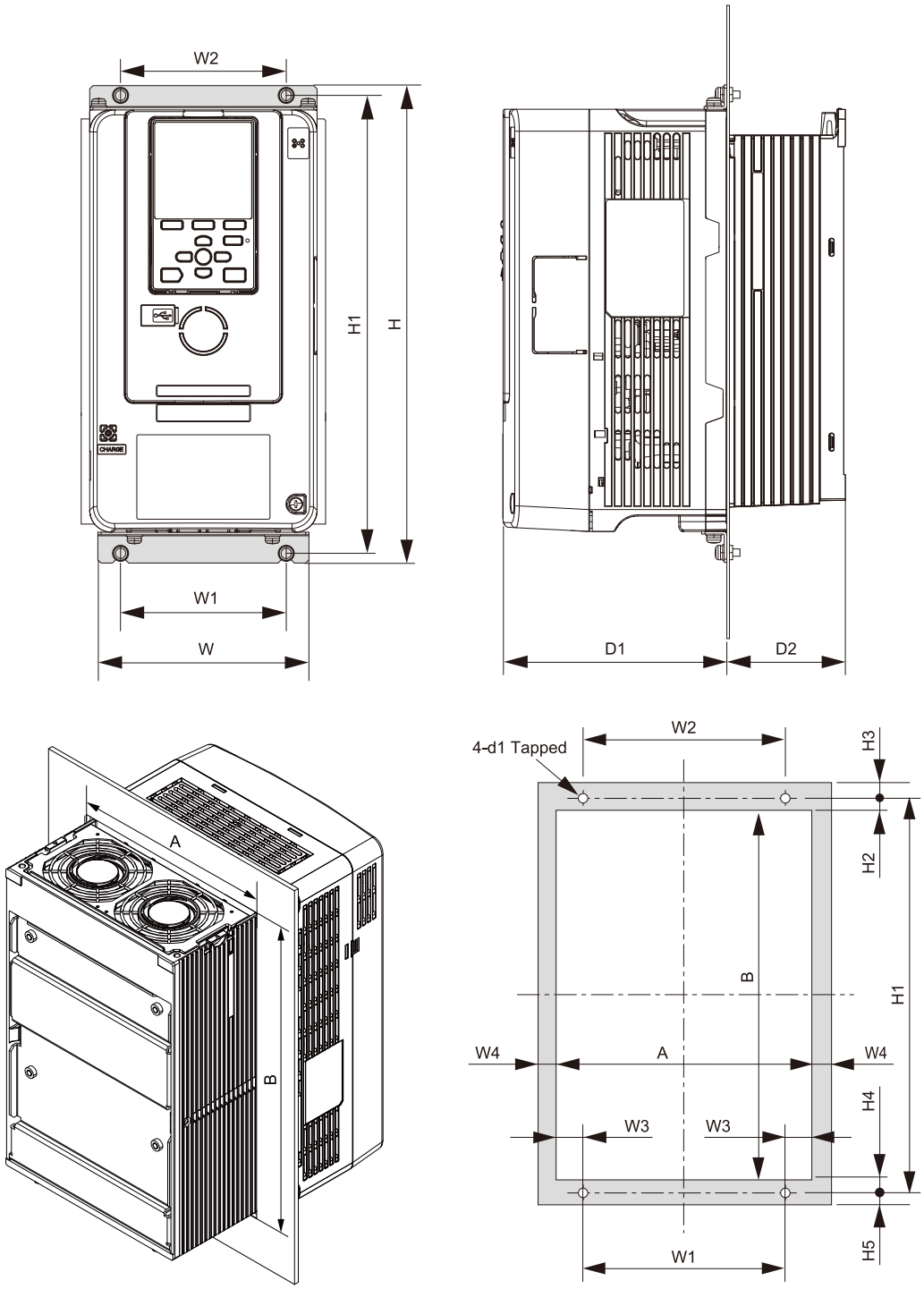

Figure 2.31 Panel Cut-Out Dimensions

Table 2.7 Panel Cut-Out Dimensions (200 V Class)

Model	Dimensions mm (in)															
	W	H	D1	D2	W1	W2	W3	W4	H1	H2	H3	H4	H5	A	B	d1
2022 *1*	140 (5.51)	294 (11.57)	138 (5.43)	73 (2.87)	102 (4.02)	102 (4.02)	16 (0.63)	3 (0.12)	282 (11.10)	23 (0.91)	6 (0.24)	26 (1.02)	6 (0.24)	134 (5.28)	233 (9.17)	M5
2031 *1*	140 (5.51)	294 (11.57)	138 (5.43)	73 (2.87)	102 (4.02)	102 (4.02)	16 (0.63)	3 (0.12)	282 (11.10)	23 (0.91)	6 (0.24)	26 (1.02)	6 (0.24)	134 (5.28)	233 (9.17)	M5
2041 *1*	140 (5.51)	294 (11.57)	138 (5.43)	73 (2.87)	102 (4.02)	102 (4.02)	16 (0.63)	3 (0.12)	282 (11.10)	23 (0.91)	6 (0.24)	26 (1.02)	6 (0.24)	134 (5.28)	233 (9.17)	M5
2059 *1*	180 (7.09)	329 (12.95)	134 (5.28)	68 (2.68)	140 (5.51)	140 (5.51)	17 (0.67)	3 (0.12)	318 (12.52)	23.5 (0.93)	5 (0.20)	24.5 (0.97)	6 (0.24)	174 (6.85)	270 (10.63)	M5
2075 *1*	220 (8.66)	384 (15.12)	140 (5.51)	87 (3.43)	192 (7.56)	192 (7.56)	11 (0.43)	3 (0.12)	371 (14.61)	27 (1.06)	7 (0.28)	25 (0.98)	6 (0.24)	214 (8.43)	319 (12.56)	M6

Model	Dimensions mm (in)															
	W	H	D1	D2	W1	W2	W3	W4	H1	H2	H3	H4	H5	A	B	d1
2094 *1	220 (8.66)	384 (15.12)	140 (5.51)	87 (3.43)	192 (7.56)	192 (7.56)	11 (0.43)	3 (0.12)	371 (14.61)	27 (1.06)	7 (0.28)	25 (0.98)	6 (0.24)	214 (8.43)	319 (12.56)	M6
2110	240 (9.45)	400 (15.75)	166 (6.54)	114 (4.49)	195 (7.68)	204 (8.03)	14.5 (0.57)	8 (0.32)	385 (15.16)	19.5 (0.77)	7.5 (0.30)	19.5 (0.77)	7.5 (0.30)	224 (8.82)	346 (13.62)	M6
2144	255 (10.04)	450 (17.72)	166 (6.54)	114 (4.49)	170 (6.69)	210 (8.27)	34.5 (1.36)	8 (0.32)	436 (17.17)	20 (0.79)	8 (0.32)	20 (0.79)	6 (0.24)	239 (9.41)	396 (15.59)	M6
2181	264 (10.39)	543 (21.38)	186 (7.32)	149 (5.87)	190 (7.48)	220 (8.66)	29 (1.14)	8 (0.32)	527 (20.75)	19.5 (0.77)	8.5 (0.34)	20.5 (0.81)	7.5 (0.30)	248 (9.76)	487 (19.17)	M8
2225	264 (10.39)	543 (21.38)	186 (7.32)	149 (5.87)	190 (7.48)	220 (8.66)	29 (1.14)	8 (0.32)	527 (20.75)	19.5 (0.77)	8.5 (0.34)	20.5 (0.81)	7.5 (0.30)	248 (9.76)	487 (19.17)	M8
2269	312 (12.28)	700 (27.56)	260 (10.24)	160 (6.30)	218 (8.58)	263 (10.35)	39 (1.54)	8 (0.32)	675 (26.56)	33 (1.30)	12 (0.47)	32 (1.26)	13 (0.51)	296 (11.65)	610 (24.02)	M10
2354	312 (12.28)	700 (27.56)	260 (10.24)	160 (6.30)	218 (8.58)	263 (10.35)	39 (1.54)	8 (0.32)	675 (26.56)	33 (1.30)	12 (0.47)	32 (1.26)	13 (0.51)	296 (11.65)	610 (24.02)	M10
2432	440 (17.32)	800 (31.50)	254 (10.00)	218 (8.58)	370 (14.57)	310 (12.20)	23 (0.91)	12 (0.47)	773 (30.43)	31.5 (1.24)	14 (0.55)	31.5 (1.24)	13 (0.51)	416 (16.38)	710 (27.95)	M12
2519	440 (17.32)	800 (31.50)	254 (10.00)	218 (8.58)	370 (14.57)	310 (12.20)	23 (0.91)	12 (0.47)	773 (30.43)	31.5 (1.24)	14 (0.55)	31.5 (1.24)	13 (0.51)	416 (16.38)	710 (27.95)	M12

*1 The external heatsink installation kit is necessary.

Table 2.8 Panel Cut-Out Dimensions (400 V Class)

Model	Dimensions mm (in)															
	W	H	D1	D2	W1	W2	W3	W4	H1	H2	H3	H4	H5	A	B	d1
4012 *1	140 (5.51)	294 (11.57)	138 (5.43)	73 (2.87)	102 (4.02)	102 (4.02)	16 (0.63)	3 (0.12)	282 (11.10)	23 (0.91)	6 (0.24)	26 (1.02)	6 (0.24)	134 (5.28)	233 (9.17)	M5
4019 *1	140 (5.51)	294 (11.57)	138 (5.43)	73 (2.87)	102 (4.02)	102 (4.02)	16 (0.63)	3 (0.12)	282 (11.10)	23 (0.91)	6 (0.24)	26 (1.02)	6 (0.24)	134 (5.28)	233 (9.17)	M5
4023 *1	140 (5.51)	294 (11.57)	138 (5.43)	73 (2.87)	102 (4.02)	102 (4.02)	16 (0.63)	3 (0.12)	282 (11.10)	23 (0.91)	6 (0.24)	26 (1.02)	6 (0.24)	134 (5.28)	233 (9.17)	M5
4030 *1	180 (7.09)	329 (12.95)	134 (5.28)	68 (2.68)	140 (5.51)	140 (5.51)	17 (0.67)	3 (0.12)	318 (12.52)	23.5 (0.93)	5 (0.20)	24.5 (0.97)	6 (0.24)	174 (6.85)	270 (10.63)	M5
4039 *1	180 (7.09)	329 (12.95)	134 (5.28)	68 (2.68)	140 (5.51)	140 (5.51)	17 (0.67)	3 (0.12)	318 (12.52)	23.5 (0.93)	5 (0.20)	24.5 (0.97)	6 (0.24)	174 (6.85)	270 (10.63)	M5
4049 *1	220 (8.66)	384 (15.12)	140 (5.51)	87 (3.43)	192 (7.56)	192 (7.56)	11 (0.43)	3 (0.12)	371 (14.61)	27 (1.06)	7 (0.28)	25 (0.98)	6 (0.24)	214 (8.43)	319 (12.56)	M6
4056 *1	220 (8.66)	384 (15.12)	140 (5.51)	106 (4.17)	192 (7.56)	192 (7.56)	11 (0.43)	3 (0.12)	371 (14.61)	27 (1.06)	7 (0.28)	25 (0.98)	6 (0.24)	214 (8.43)	319 (12.56)	M6
4075	240 (9.45)	400 (15.75)	166 (6.54)	114 (4.49)	195 (7.68)	204 (8.03)	14.5 (0.57)	8 (0.32)	385 (15.16)	19.5 (0.77)	7.5 (0.30)	19.5 (0.77)	7.5 (0.30)	224 (8.82)	346 (13.62)	M6
4094	255 (10.04)	450 (17.72)	166 (6.54)	114 (4.49)	170 (6.69)	210 (8.27)	34.5 (1.36)	8 (0.32)	436 (17.17)	20 (0.79)	8 (0.32)	20 (0.79)	6 (0.24)	239 (9.41)	396 (15.59)	M6
4114	255 (10.04)	450 (17.72)	166 (6.54)	114 (4.49)	170 (6.69)	210 (8.27)	34.5 (1.36)	8 (0.32)	436 (17.17)	20 (0.79)	8 (0.32)	20 (0.79)	6 (0.24)	239 (9.41)	396 (15.59)	M6
4140	264 (10.39)	543 (21.38)	186 (7.32)	149 (5.87)	190 (7.48)	220 (8.66)	29 (1.14)	8 (0.32)	527 (20.75)	19.5 (0.77)	8.5 (0.34)	20.5 (0.81)	7.5 (0.30)	248 (9.76)	487 (19.17)	M8
4188	264 (10.39)	543 (21.38)	186 (7.32)	149 (5.87)	190 (7.48)	220 (8.66)	29 (1.14)	8 (0.32)	527 (20.75)	19.5 (0.77)	8.5 (0.34)	20.5 (0.81)	7.5 (0.30)	248 (9.76)	487 (19.17)	M8
4225	312 (12.28)	700 (27.56)	260 (10.24)	160 (6.30)	218 (8.58)	263 (10.35)	39 (1.54)	8 (0.32)	675 (26.56)	33 (1.30)	12 (0.47)	32 (1.26)	13 (0.51)	296 (11.65)	610 (24.02)	M10
4270	312 (12.28)	700 (27.56)	260 (10.24)	160 (6.30)	218 (8.58)	263 (10.35)	39 (1.54)	8 (0.32)	675 (26.56)	33 (1.30)	12 (0.47)	32 (1.26)	13 (0.51)	296 (11.65)	610 (24.02)	M10
4325	312 (12.28)	700 (27.56)	260 (10.24)	160 (6.30)	218 (8.58)	263 (10.35)	39 (1.54)	8 (0.32)	675 (26.56)	33 (1.30)	12 (0.47)	32 (1.26)	13 (0.51)	296 (11.65)	610 (24.02)	M10
4380	440 (17.32)	800 (31.50)	254 (10.00)	218 (8.58)	370 (14.57)	310 (12.20)	23 (0.91)	12 (0.47)	773 (30.43)	31.5 (1.24)	14 (0.55)	31.5 (1.24)	13 (0.51)	416 (16.38)	710 (27.95)	M12

*1 The external heatsink installation kit is necessary.

3

Electrical Installation

This chapter gives how to wire the control circuit terminals, motor, and power supply of the drive.

3.1 Section Safety 52
3.2 Standard Connection Diagram 55
3.3 Main Circuit Wiring 58
3.4 Main Circuit Terminal Block Wiring Procedure 75
3.5 Control Circuit Wiring 81
3.6 Control I/O Connections 92
3.7 Connect the Drive to a PC 95
3.8 Braking Resistor Installation 96
3.9 Drive Wiring Protection 102
3.10 Dynamic Braking Option, Motor Protection 103
3.11 Improve the Power Factor 105
3.12 Prevent Switching Surge 106
3.13 Decrease Noise 107
3.14 Protect the Drive during Failures 109
3.15 Wiring Checklist 111
3.16 Motor Application Precautions 113

3.1 Section Safety

⚠DANGER

Electrical Shock Hazard

Do not examine, connect, or disconnect wiring on an energized drive. Before servicing, disconnect all power to the equipment and wait for the time specified on the warning label at a minimum. The internal capacitor stays charged after the drive is de-energized. The charge indicator LED extinguishes when the DC bus voltage decreases below 50 Vdc. When all indicators are OFF, remove the covers before measuring for dangerous voltages to make sure that the drive is safe.

If you do work on the drive when it is energized, it will cause serious injury or death from electrical shock.

⚠WARNING

Electrical Shock Hazard

Do not operate the drive when covers are missing. Replace covers and shields before you operate the drive. Use the drive only as specified by the instructions.

Some figures in this section include drives without covers or safety shields to more clearly show the inside of the drive. If covers or safety shields are missing from the drive, it can cause serious injury or death.

Ground the neutral point on the power supply of drive models 4xxxC to comply with the EMC Directive before you turn on the EMC filter.

If you turn ON the EMC filter, but you do not ground the neutral point, it can cause serious injury or death.

Make sure that the protective ground wire aligns with IEC/EN 61800-5-1 and local safety regulations. As specified in IEC/EN 61800-5-1, wire the power supply to automatically de-energize when the protective ground wire disconnects. You can also connect a protective ground wire that has a minimum cross-sectional area of 10 mm^2 (copper wire) or 16 mm^2 (aluminum wire). The leakage current of the drive will be more than 3.5 mA in drive models 4012C to 4056C (with built-in EMC filter turned ON).

If the protective ground wire does not align with IEC/EN 61800-5-1 and local safety regulations, it can cause death or serious injury from electrical shock.

When there is a DC component in the protective earthing conductor, the drive can cause a residual current. When a residual current operated protective or monitoring device prevents direct or indirect contact, always use a type B Earth Leakage Circuit Breaker (ELCB) as specified by IEC/EN 60755.

If you do not use the correct ELCB, it can cause serious injury or death.

Do not wear loose clothing or jewelry when you do work on the drive. Tighten loose clothing and remove all metal objects, for example watches or rings.

Loose clothing can catch on the drive and jewelry can conduct electricity and cause serious injury or death.

Do not remove covers or touch circuit boards while the drive is energized.

If you touch the internal components of an energized drive, it can cause serious injury or death.

Only let approved personnel install, wire, maintain, examine, replace parts, and repair the drive.

If personnel are not approved, it can cause serious injury or death.

Do not modify the drive body or drive circuitry.

Modifications to drive body and circuitry can cause serious injury or death, will cause damage to the drive, and will void the warranty. Yaskawa is not responsible for modifications of the product made by the user.

Fire Hazard

Remove the insulation from the connection wire ends to the length shown in “Wire Stripping Length”.

If you pinch the insulation in the wire terminals, it can cause serious injury or death from fire.

⚠WARNING

Make sure that there are no loose stranded wires or frayed wires in the wire core after wiring is complete.

Loose stranded wires or frayed wires in the wire core can create a short circuit and cause serious injury or death from electrical shock or fire.

Tighten all terminal screws to the correct tightening torque.

Connections that are too loose or too tight can cause incorrect operation and damage to the drive. Incorrect connections can also cause death or serious injury from fire.

Tighten screws at an angle in the specified range shown in this manual.

If you tighten the screws at an angle not in the specified range, you can have loose connections that can cause damage to the terminal block or start a fire and cause serious injury or death.

Damage to Equipment

Do not apply incorrect voltage to the main circuit of the drive. Operate the drive in the specified range of the input voltage on the drive nameplate.

Voltages that are higher than the permitted nameplate tolerance can cause damage to the drive.

Fire Hazard

When you install a dynamic braking option, wire the components as specified by the wiring diagrams.

Incorrect wiring can cause damage to braking components or serious injury or death.

NOTICE

Do not let unwanted objects, for example metal shavings or wire clippings, fall into the drive during drive installation. Put a temporary cover over the drive during installation. Remove the temporary cover before start-up.

Unwanted objects inside of the drive can cause damage to the drive.

Damage to Equipment

When you touch the drive and circuit boards, make sure that you observe correct electrostatic discharge (ESD) procedures.

If you do not follow procedures, it can cause ESD damage to the drive circuitry.

Select a motor that is compatible with the load torque and speed range. When 100% continuous torque is necessary at low speed, use an inverter-duty motor or vector-duty motor. When you use a standard fan-cooled motor, decrease the motor torque in the low-speed range.

If you operate a standard fan-cooled motor at low speed and high torque, it will decrease the cooling effects and can cause heat damage.

Obey the speed range specification of the motor as specified by the manufacturer. When you must operate the motor outside of its specifications, contact the motor manufacturer.

If you continuously operate oil-lubricated motors outside of the manufacturer specifications, it can cause damage to the motor bearings.

When the input voltage is 440 V or higher, make sure that the motor insulation voltage is sufficient or use an inverter-duty motor or vector-duty motor with reinforced insulation.

Motor winding and insulation failure can occur.

NOTICE

Before you connect a dynamic braking option to the drive, make sure that qualified personnel read and obey the Braking Unit and Braking Resistor Unit Installation Manual (TOBPC72060001).

If you do not read and obey the manual or if personnel are not qualified, it can cause damage to the drive and braking circuit.

Make sure that all connections are correct after you install the drive and connect peripheral devices.

Incorrect connections can cause damage to the drive.

Note:

- Torque characteristics are different than when you operate the motor directly from line power. Make sure that you understand the load torque characteristics for the application.
- Make sure that the 50% ED output current of the drive is equal to or more than the current rating of the motor.
- Do not use unshielded wire for control wiring. Use shielded, twisted-pair wires and ground the shield to the ground terminal of the drive. Unshielded wire can cause electrical interference and unsatisfactory system performance.

3.2 Standard Connection Diagram

◆ Section Safety

⚠ DANGER Electrical Shock Hazard
Do not examine, connect, or disconnect wiring on an energized drive. Before servicing, disconnect all power to the equipment and wait for the time specified on the warning label at a minimum. The internal capacitor stays charged after the drive is de-energized. The charge indicator LED extinguishes when the DC bus voltage decreases below 50 Vdc. When all indicators are OFF, remove the covers before measuring for dangerous voltages to make sure that the drive is safe.
If you do work on the drive when it is energized, it will cause serious injury or death from electrical shock.

⚠ WARNING Electrical Shock Hazard
De-energize the drive and wait 5 minutes minimum until the Charge LED turns off. Remove the front cover and terminal cover to do work on wiring, circuit boards, and other parts. Use terminals for their correct function only.
Incorrect wiring, incorrect ground connections, and incorrect repair of protective covers can cause death or serious injury.

⚠ WARNING Electrical Shock Hazard
Correctly ground the drive before you turn on the EMC filter switch.
If you touch electrical equipment that is not grounded, it can cause serious injury or death.

⚠ WARNING Electrical Shock Hazard
Use the terminals for the drive only for their intended purpose. Refer to the technical manual for more information about the I/O terminals.
Wiring and grounding incorrectly or modifying the cover may damage the equipment or cause injury.

◆ Drive Connection Diagram

Wire the drive as specified by Figure 3.1.

⚠ WARNING Sudden Movement Hazard
Set the MFDI parameters before you close control circuit switches.
Incorrect Run/Stop circuit sequence settings can cause serious injury or death from moving equipment.

⚠ WARNING Fire Hazard
Install sufficient branch circuit short circuit protection as specified by applicable codes and this manual. The drive is suitable for circuits that supply not more than 100,000 RMS symmetrical amperes, 240 Vac maximum (200 V Class), 480 Vac maximum (400 V Class).
Incorrect branch circuit short circuit protection can cause serious injury or death.

NOTICE Damage to Equipment
When the input voltage is 440 V or higher, make sure that the motor insulation voltage is sufficient or use an inverter-duty motor or vector-duty motor with reinforced insulation.
Motor winding and insulation failure can occur.

Note:
Do not connect the AC control circuit ground to the drive enclosure. Failure to obey can cause incorrect control circuit operation.

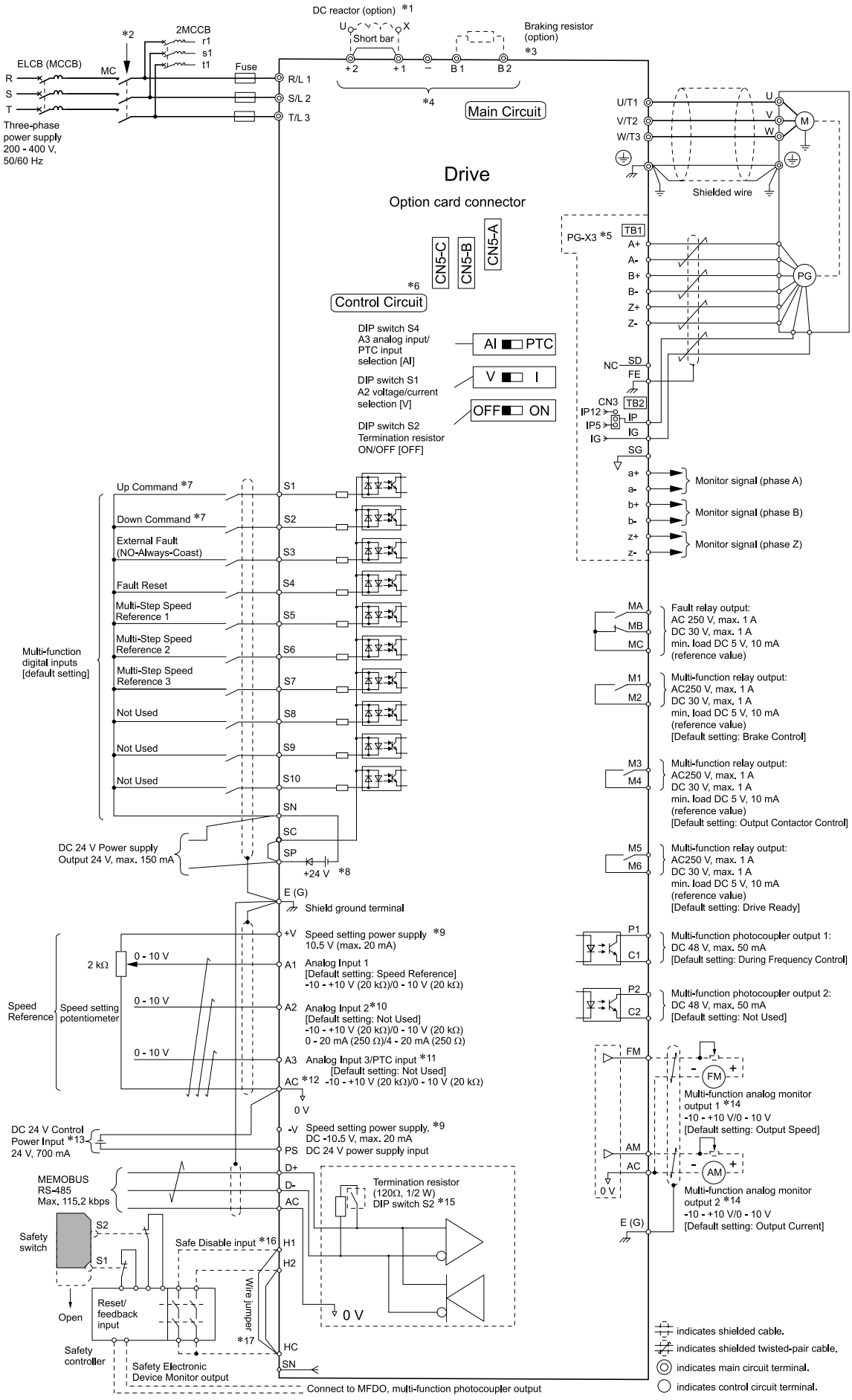

Figure 3.1 Standard Drive Connection Diagram

*1 When you install a DC reactor, you must remove the jumper between terminals +1 and +2. Ground the DC reactor (option) on the back of the mounting base. Remove all paint from the mounting surface of the control panel.
*2 Set the wiring sequence to use a fault relay output to de-energize the drive. When you set *L5-02 = 1 [Fault Output during Auto Reset = Fault output is set]*, the drive outputs a fault signal during Automatic Fault Reset and de-energizes. Be careful when you use a cut-off sequence. The default setting is *L5-02 = 0 [No fault output]*.
*3 When you use a regenerative converter, regenerative unit, or braking unit, set *L8-55 = 0 [Internal DB TransistorProtection = RF Disabled/BOL Disabled]*. If *L8-55 = 1 [RF Enabled/BOL Enabled]*, the drive will detect *rF [Braking Resistor Fault]*.
*4 Connect peripheral options to terminals -, +1, +2, B1, and B2.

⚠ WARNING Fire Hazard
Only connect factory-recommended devices or circuits to drive terminals B1, B2, -, +1, +2, and +3. Do not connect AC power supply lines to these terminals.
Incorrect wiring can cause damage to the drive and serious injury or death from fire.

*5 Encoder circuit wiring (wiring to PG-X3 option) is not necessary for applications that do not use motor speed feedback.
*6 Connect a 24 V power supply to terminals PS-AC to operate the control circuit while the main circuit power supply is OFF.
*7 Set up the wiring to rotate the motor forward (FWD) when an elevator car moves upward, and to rotate the motor reverse (REV) when an elevator car moves downward in all control methods.
*8 To set the MFDI power supply (Sinking/Sourcing Mode or internal/external power supply), install or remove a jumper between terminals SC-SP or SC-SN depending on the application.

NOTICE Damage to Equipment
Do not close the circuit between terminals SP-SN.
If you close the circuits between terminals SC-SP and terminals SC-SN at the same time, it will cause damage to the drive.

- Sinking Mode, Internal power supply: Install the jumper to close the circuit between terminals SC-SP.

NOTICE Damage to Equipment
Do not close the circuit between terminals SC-SN.
If you close the circuits between terminals SC-SP and terminals SC-SN at the same time, it will cause damage to the drive.

- Sourcing Mode, Internal power supply: Install the jumper to close the circuit between terminals SC-SN.

NOTICE Damage to Equipment
Do not close the circuit between terminals SC-SP.
If you close the circuits between terminals SC-SP and terminals SC-SN at the same time, it will cause damage to the drive.

- External power supply: Remove the jumper from the MFDI terminals. It is not necessary to close the circuit between terminals SC-SP and terminals SC-SN.

*9 The maximum output current capacity for terminals +V and -V on the control circuit is 20 mA.

NOTICE
Do not install a jumper between terminals +V, -V, and AC.
A closed circuit between these terminals will cause damage to the drive.

*10 DIP switch S1 sets terminal A2 for voltage or current input. The default setting for S1 is voltage input (“V” side).
*11 DIP switch S4 sets terminal A3 for analog or PTC input.
*12 Do not ground the control circuit terminals AC or connect them to the drive chassis.

NOTICE
Do not ground the AC control circuit terminals and only connect the AC terminals as specified by the product instructions.
If you connect the AC terminals incorrectly, it can cause damage to the drive.

*13 Connect the positive lead from an external 24 Vdc power supply to terminal PS and the negative lead to terminal AC.

NOTICE
Connect terminals PS and AC correctly for the 24 V power supply.
If you connect the wires to the incorrect terminals, it will cause damage to the drive.

*14 Use multi-function analog monitor outputs with analog frequency meters, ammeters, voltmeters, and wattmeters. Do not use monitor outputs with feedback-type signal devices.
*15 Set DIP switch S2 to “ON” to enable the termination resistor in the last drive in a MEMOBUS/Modbus network.
*16 Use only Sourcing Mode for Safe Disable input.
*17 Disconnect the wire jumpers between H1 and HC and H2 and HC to use the Safe Disable input.

3.3 Main Circuit Wiring

This section gives information about the functions, specifications, and procedures necessary to safely and correctly wire the main circuit in the drive.

NOTICE **Damage to Equipment**

Do not energize and de-energize the drive more frequently than one time each 5 minutes (48 times/day maximum).
If you frequently energize and de-energize the drive, it can cause drive failure.

Note:
Soldered wire connections can become loose over time and cause unsatisfactory drive performance.

◆ Motor and Main Circuit Connections

⚠ WARNING **Electrical Shock Hazard**

Do not connect terminals R/L1, S/L2, T/L3, U/T1, V/T2, W/T3, -, +1, +2, +3, B1, or B2 to the ground terminal.
If you connect these terminals to earth ground, it can cause damage to the drive or serious injury or death.

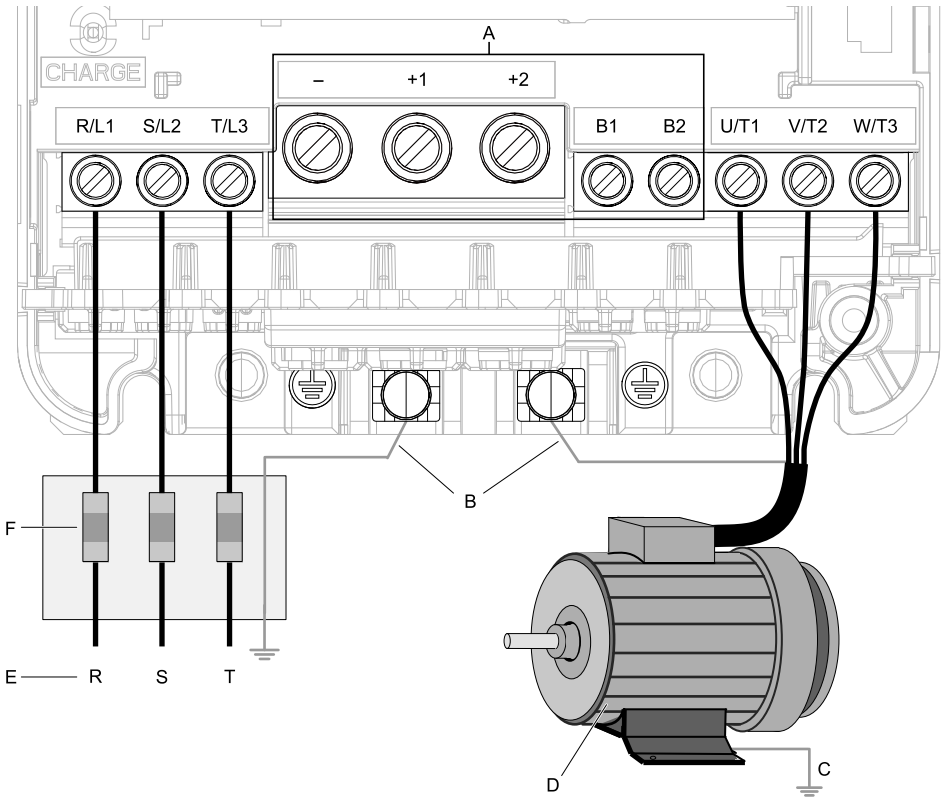

Note:
The location of terminals are different for different drive models.

A - DC bus terminal
B - Connect to the drive ground terminal.
C - Ground the motor case.
D - Three-phase motor
E - Use R, S, T for input power supply.
F - Input protection (fuses or circuit breakers)

Figure 3.2 Wiring the Main Circuit and Motor

◆ Configuration of Main Circuit Terminal Block

Use Table 3.1 to find the correct main circuit terminal block figure for your drive.

Table 3.1 Configuration of Main Circuit Terminal Block

Model	Shape of Terminal *1
2022 - 2225, 4012 - 4188	European terminal
2269 - 2519, 4225 - 4380	Screw terminal

*1 The ground terminal is a screw terminal.

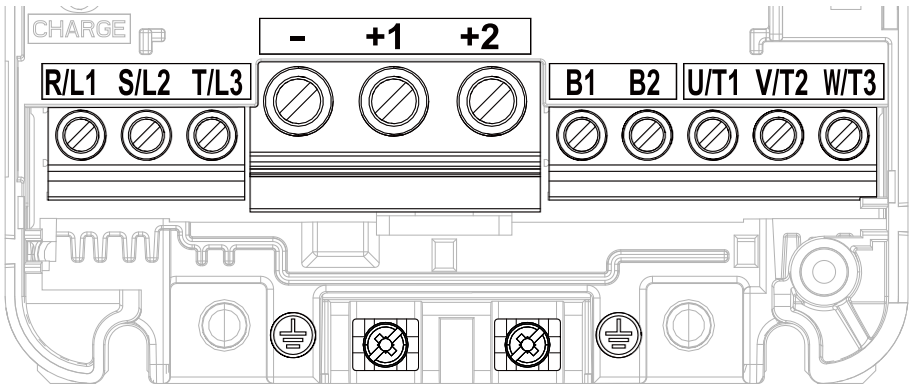

Figure 3.3 Configuration of Main Circuit Terminal Block (2022 - 2041, 4012 - 4023)

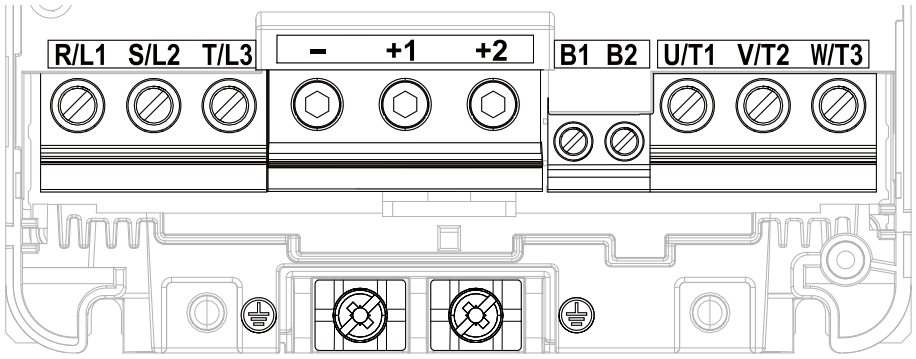

Figure 3.4 Configuration of Main Circuit Terminal Block (2059, 4030, 4039)

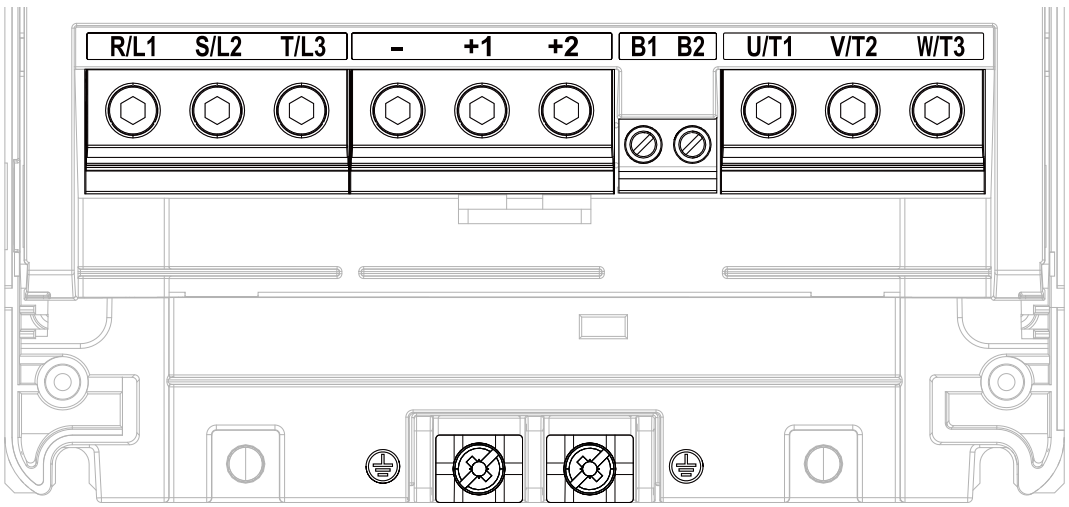

Figure 3.5 Configuration of Main Circuit Terminal Block (2075, 2094)

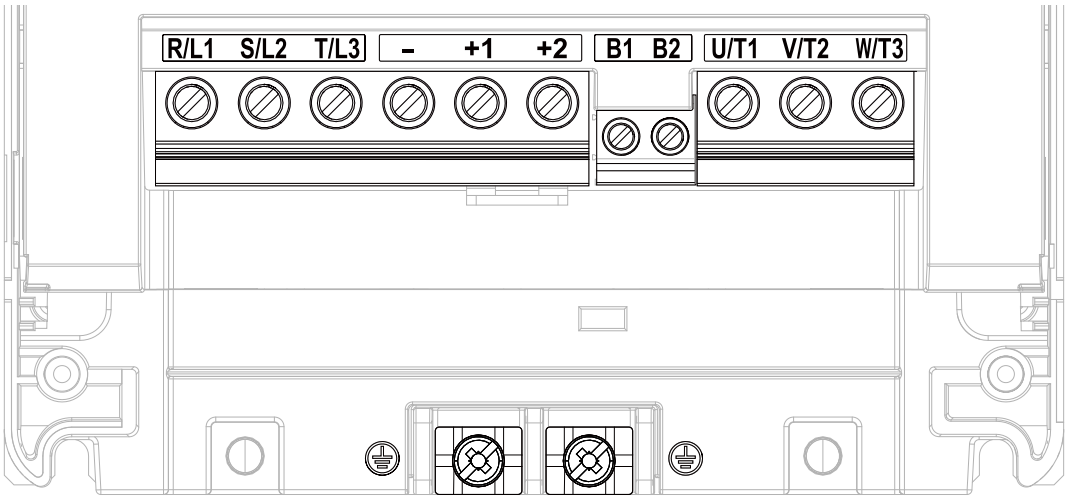

Figure 3.6 Configuration of Main Circuit Terminal Block (4049)

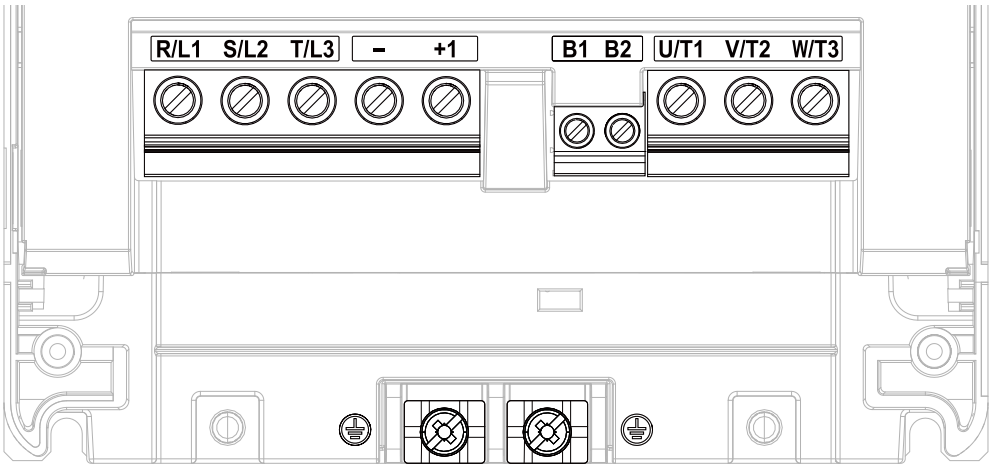

Figure 3.7 Configuration of Main Circuit Terminal Block (4056)

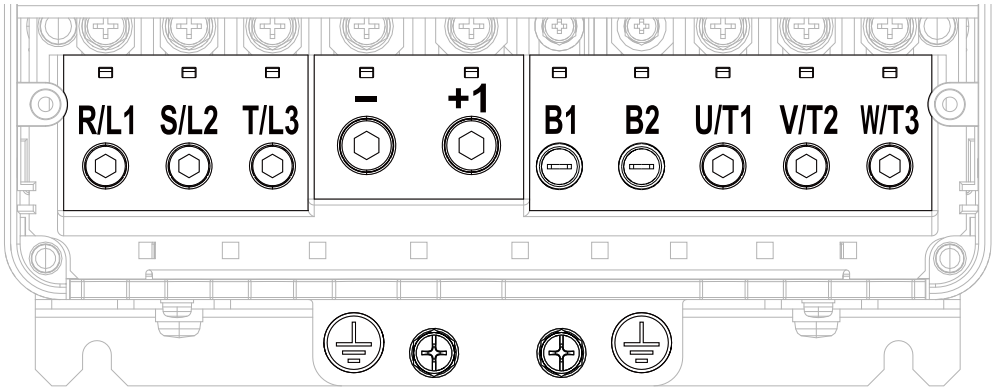

Figure 3.8 Configuration of Main Circuit Terminal Block (2110)

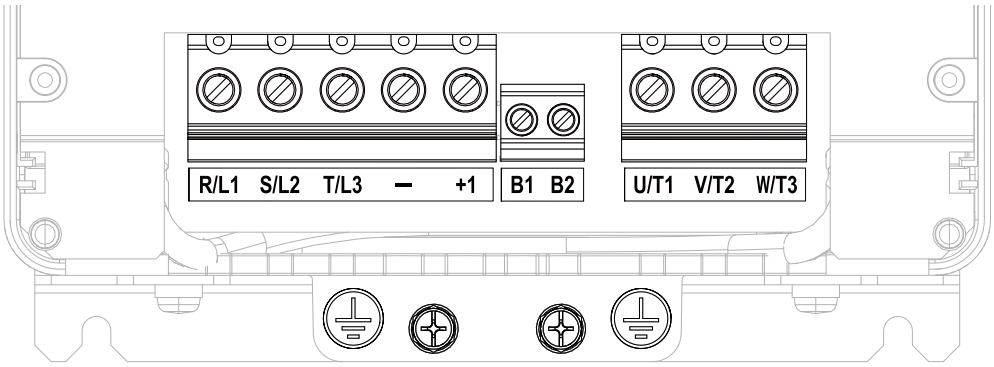

Figure 3.9 Configuration of Main Circuit Terminal Block (4075)

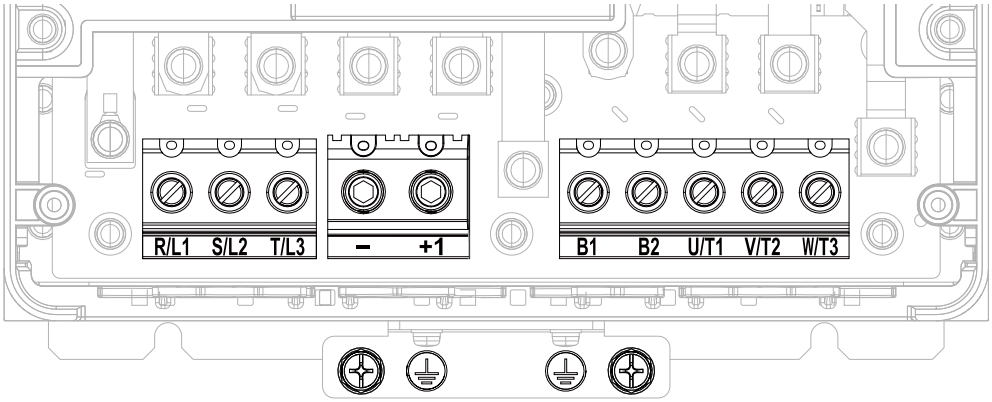

Figure 3.10 Configuration of Main Circuit Terminal Block (4094)

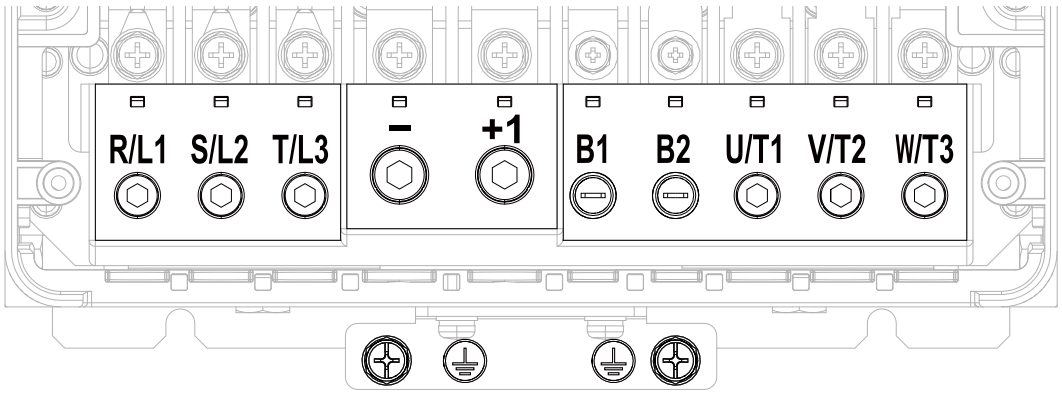

Figure 3.11 Configuration of Main Circuit Terminal Block (2144, 4114)

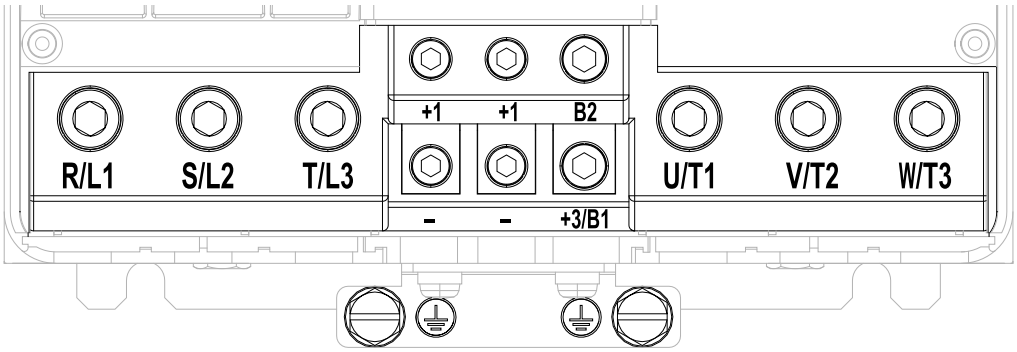

Note:

The terminals are different for different models:

- 2181, 2225: You cannot use terminal B2. Terminal symbol display "+3/B1" shows terminal +3.
- 4140, 4188: Terminal symbol display "+3/B1" shows terminal B1.

Figure 3.12 Configuration of Main Circuit Terminal Block (2181, 2225, 4140, 4188)

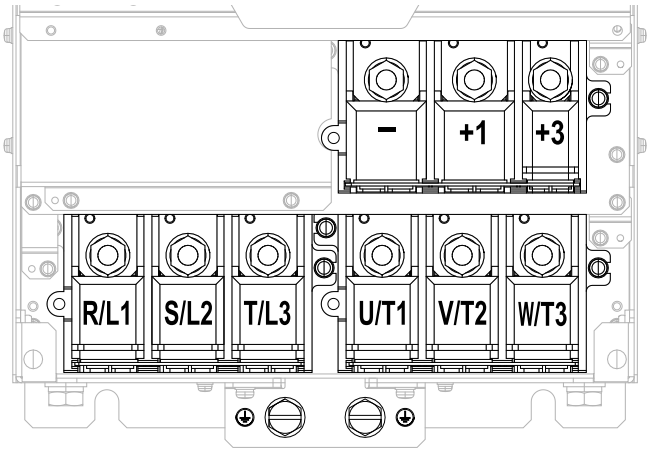

Figure 3.13 Configuration of Main Circuit Terminal Block (2269, 2354, 4225 - 4325)

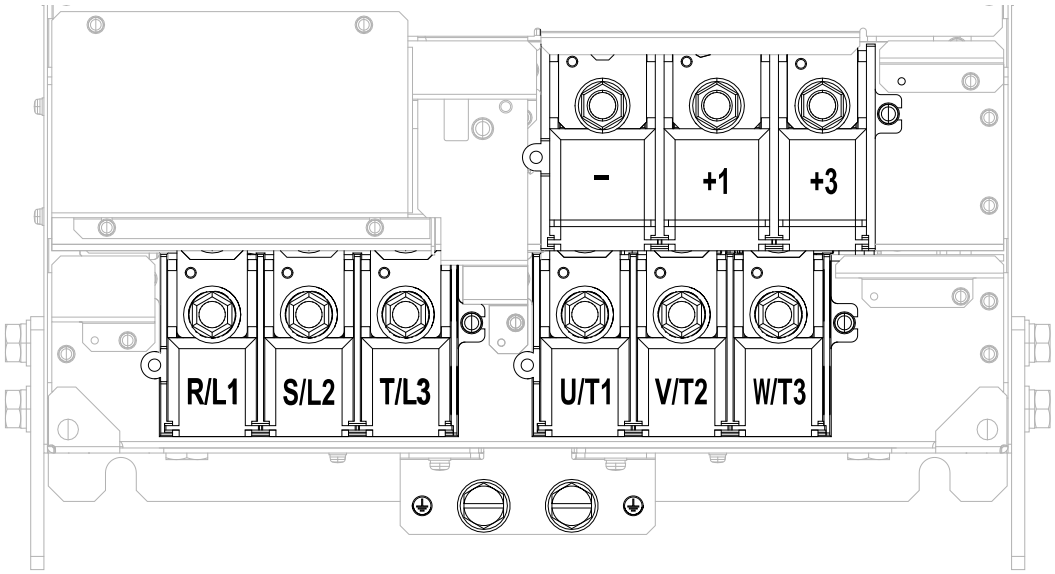

Figure 3.14 Configuration of Main Circuit Terminal Block (2432, 2519, 4380)

◆ Main Circuit Terminal Functions

Refer to Table 3.2 for the functions of drive main circuit terminals.

Table 3.2 Main Circuit Terminal Functions

<table>
<tr><th>Terminal</th><th colspan="3">Name</th><th rowspan="2">Function</th></tr>
<tr><th rowspan="2">Model</th><th>2022 - 2094</th><th>2110 - 2144</th><th>2181 - 2519</th></tr>
<tr><th>4012 - 4049</th><th>4056 - 4188</th><th>4225 - 4380</th></tr>
<tr><td>R/L1</td><td colspan="3" rowspan="3">Main circuit power supply input</td><td rowspan="3">To connect a commercial power supply.</td></tr>
<tr><td>S/L2</td></tr>
<tr><td>T/L3</td></tr>
<tr><td>U/T1</td><td colspan="3" rowspan="3">Drive output</td><td rowspan="3">To connect a motor.</td></tr>
<tr><td>V/T2</td></tr>
<tr><td>W/T3</td></tr>
<tr><td>B1</td><td colspan="2" rowspan="2">Braking resistor connection</td><td rowspan="2">-</td><td rowspan="2">To connect a braking resistor or braking resistor unit.</td></tr>
<tr><td>B2</td></tr>
<tr><td>+2</td><td rowspan="3">• DC power supply input (+1 and -)
• DC reactor connection (+1 and +2)</td><td colspan="2">-</td><td rowspan="4">To connect peripheral devices, for example:
• DC power input
• Braking unit
• DC reactor
Note:
Remove the jumper between terminals +1 and +2 to connect a DC reactor.</td></tr>
<tr><td>+1</td><td rowspan="2">DC power supply input (+1 and -)</td><td rowspan="3">• DC power supply input (+1 and -)
• Braking unit connection (+3 and -)</td></tr>
<tr><td>-</td></tr>
<tr><td>+3</td><td colspan="2">-</td></tr>
<tr><td>⏚</td><td colspan="3">• 200 V: D class grounding (ground to 100 Ω or less)
• 400 V: C class grounding (ground to 10 Ω or less)</td><td>To ground the drive.</td></tr>
</table>

Note:
Use terminals - and B1 to connect a CDBR-type control unit to drive models 2022 to 2144 and 4012 to 4188 that have built-in braking transistors.

◆ Wire Selection

Select the correct wires for main circuit wiring.

Refer to *Main Circuit Wire Gauges and Tightening Torques for CE Compliance on page 216* for wire gauges and tightening torques as specified by European standards.

Refer to *Main Circuit Wire Gauges and Tightening Torques for UL Compliance on page 235* for wire gauges and tightening torques as specified by UL standards.

■ Wire Selection Precautions

⚠ WARNING Electrical Shock Hazard

Make sure that the protective ground wire aligns with IEC/EN 61800-5-1 and local safety regulations. As specified in IEC/EN 61800-5-1, wire the power supply to automatically de-energize when the protective ground wire disconnects. You can also connect a protective ground wire that has a minimum cross-sectional area of 10 mm² (copper wire) or 16 mm² (aluminum wire). The leakage current of the drive will be more than 3.5 mA in drive models 4012C to 4056C (with built-in EMC filter turned ON).
If the protective ground wire does not align with IEC/EN 61800-5-1 and local safety regulations, it can cause death or serious injury from electrical shock.

Think about line voltage drop before you select wire gauges. Select wire gauges that drop the voltage by 2% or less of the rated voltage. Increase the wire gauge and the cable length when the risk of voltage drops increases. Use this formula to calculate line voltage drop:

Line voltage drop (V) = $\sqrt{3}$ × wire resistance (Ω/km) × wiring distance (m) × motor rated current (A) × 10^{-3}.

■ Precautions during Wiring

- Use terminals B1 and - to connect braking units to drives that have built-in braking transistors.

- Refer to “Yaskawa AC Drive Option Braking Unit, Braking Resistor Unit Instruction Manual (TOBPC72060001)” for information about wire gauges and tightening torques to connect braking resistor units or braking units.
- Use terminals +1 and - to connect a regenerative converter or regenerative unit.

⚠ WARNING Fire Hazard

Do not connect a braking resistor to terminals +1 or -. Use terminals B1 and B2 for the braking resistor connections.
If you connect a braking resistor to the incorrect terminals, it can cause damage to the drive and braking circuit and serious injury or death.

■ Main Circuit Wire Gauges and Tightening Torques

⚠ WARNING Electrical Shock Hazard

Make sure that the protective ground wire aligns with IEC/EN 61800-5-1 and local safety regulations. As specified in IEC/EN 61800-5-1, wire the power supply to automatically de-energize when the protective ground wire disconnects. You can also connect a protective ground wire that has a minimum cross-sectional area of 10 mm² (copper wire) or 16 mm² (aluminum wire). The leakage current of the drive will be more than 3.5 mA in drive models 4012C to 4056C (with built-in EMC filter turned ON).
If the protective ground wire does not align with IEC/EN 61800-5-1 and local safety regulations, it can cause death or serious injury from electrical shock.

Note:
- The recommended wire gauges are based on drive continuous current ratings with 75 °C (167 °F) 600 V class 2 heat-resistant indoor PVC wire. Assume these conditions:
  – Ambient temperature: 40 °C (104 °F) maximum
  – Wiring distance: 15 m (49 ft) maximum
  – Continuous rated output current
- Use terminals +1, +2, +3, -, B1, and B2 to connect a peripheral option such as a DC reactor or a braking resistor. Do not connect other items to these terminals.
- Refer to the instruction manual for each device for recommended wire gauges to connect peripheral devices or options to terminals +1, +2, +3, -, B1, and B2. Contact Yaskawa or your nearest sales representative if the recommended wire gauges for the peripheral devices or options are out of the range of the applicable gauges for the drive.

Three-Phase 200 V Class

Model	Terminal	Recomm. Gauge mm²	Applicable Gauge (IP20 Applicable Gauge *1) mm²	Wire Stripping Length *2 mm	Terminal Screw Size and Shape	Tightening Torque N·m (lbf·in)
2022	R/L1, S/L2, T/L3	2.5	2.5 - 4 (2.5 - 4)	10	M4 ⊖	1.5 - 1.7 (13.5 - 15)
	U/T1, V/T2, W/T3	2.5	2.5 (2.5)	10	M4 ⊖	1.5 - 1.7 (13.5 - 15)
	-, +1, +2	2.5	2.5 - 6 (2.5 - 6)	18	M5 ⊖	2.3 - 2.5 (19.8 - 22)
	B1, B2	2.5	2.5 (2.5)	10	M4 ⊖	1.5 - 1.7 (13.5 - 15)
	⏚	6	4 - 6 (-)	-	M4 ⊕	1.2 - 1.5 (10.6 - 13.3)
2031	R/L1, S/L2, T/L3	4	2.5 - 6 (2.5 - 6)	10	M4 ⊖	1.5 - 1.7 (13.5 - 15)
	U/T1, V/T2, W/T3	2.5	2.5 - 6 (2.5 - 6)	10	M4 ⊖	1.5 - 1.7 (13.5 - 15)
	-, +1, +2	6	2.5 - 6 (2.5 - 6)	18	M5 ⊖	2.3 - 2.5 (19.8 - 22)
	B1, B2	2.5	2.5 - 6 (2.5 - 6)	10	M4 ⊖	1.5 - 1.7 (13.5 - 15)
	⏚	10	4 - 10 (-)	-	M5 ⊕	2.0 - 2.5 (17.7 - 22.1)

Model	Terminal	Recomm. Gauge mm²	Applicable Gauge (IP20 Applicable Gauge *1) mm²	Wire Stripping Length *2 mm	Terminal Screw Size and Shape	Tightening Torque N·m (lbf·in)
2041	R/L1, S/L2, T/L3	6	2.5 - 10 (2.5 - 10)	10	M4	1.5 - 1.7 (13.5 - 15)
	U/T1, V/T2, W/T3	4	2.5 - 10 (2.5 - 10)	10	M4	1.5 - 1.7 (13.5 - 15)
	-, +1, +2	10	4 - 16 (4 - 16)	18	M5	2.3 - 2.5 (19.8 - 22)
	B1, B2	2.5	2.5 - 6 (2.5 - 6)	10	M4	1.5 - 1.7 (13.5 - 15)
	⏚	10	6 - 10 (-)	-	M5	2.0 - 2.5 (17.7 - 22.1)
2059	R/L1, S/L2, T/L3	10	4 - 16 (10 - 16)	18	M5	2.3 - 2.5 (19.8 - 22)
	U/T1, V/T2, W/T3	10	4 - 16 (6 - 16)	18	M5	2.3 - 2.5 (19.8 - 22)
	-, +1, +2	16	6 - 16 (10 - 16)	20	M6	5 - 5.5 (45 - 49)
	B1, B2	4	2.5 - 10 (2.5 - 10)	10	M4	1.5 - 1.7 (13.5 - 15)
	⏚	16	6 - 16 (-)	-	M6	5.4 - 6.0 (47.8 - 53.1)
2075	R/L1, S/L2, T/L3	25	10 - 25 (25)	20	M6	5 - 5.5 (45 - 49)
	U/T1, V/T2, W/T3	16	6 - 16 (16)	20	M6	5 - 5.5 (45 - 49)
	-, +1, +2	35	16 - 35 (35)	20	M6	5 - 5.5 (45 - 49)
	B1, B2	6	2.5 - 16 (2.5 - 16)	10	M4	1.5 - 1.7 (13.5 - 15)
	⏚	16	10 - 25 (-)	-	M6	5.4 - 6.0 (47.8 - 53.1)
2094	R/L1, S/L2, T/L3	25	10 - 25 (25)	20	M6	5 - 5.5 (45 - 49)
	U/T1, V/T2, W/T3	16	6 - 16 (16)	20	M6	5 - 5.5 (45 - 49)
	-, +1, +2	35	16 - 35 (35)	20	M6	5 - 5.5 (45 - 49)
	B1, B2	10	4 - 10 (4 - 10)	10	M4	1.5 - 1.7 (13.5 - 15)
	⏚	16	16 - 25 (-)	-	M6	5.4 - 6.0 (47.8 - 53.1)
2110	R/L1, S/L2, T/L3	25	16 - 35 (25 - 35)	27	M6	8 - 9 (71 - 80)
	U/T1, V/T2, W/T3	25	16 - 35 (25 - 35)	27	M6	8 - 9 (71 - 80)
	-, +1	25	25 - 50 (25 - 50)	27	M8	10 - 12 (89 - 107)
	B1, B2	10	4 - 35 (6 - 35)	21	M6	3 - 3.5 (27 - 31)
	⏚	16	16 - 25 (-)	-	M6	5.4 - 6.0 (47.8 - 53.1)

Model	Terminal	Recomm. Gauge mm²	Applicable Gauge (IP20 Applicable Gauge *1) mm²	Wire Stripping Length *2 mm	Terminal Screw Size and Shape	Tightening Torque N·m (lbf·in)
2144	R/L1, S/L2, T/L3	50	25 - 50 (50)	27	M6 ⑤	8 - 9 (71 - 80)
	U/T1, V/T2, W/T3	50	25 - 50 (50)	27	M6 ⑤	8 - 9 (71 - 80)
	-, +1	50	35 - 50 (50)	27	M8 ⑥	10 - 12 (89 - 107)
	B1, B2	16	6 - 35 (6 - 35)	21	M6 ⊖	3 - 3.5 (27 - 31)
	⏚	25	16 - 25 (-)	-	M6 ⊕	5.4 - 6.0 (47.8 - 53.1)
2181	R/L1, S/L2, T/L3	95	50 - 95 (95)	37	M10 ⑧	12 - 14 (107 - 124)
	U/T1, V/T2, W/T3	95	50 - 95 (95)	37	M10 ⑧	12 - 14 (107 - 124)
	-, -, +1, +1 *3 *4	50	25 - 50 (50)	28	M6 ⑤	8 - 9 (71 - 80)
	+3 *4	50	25 - 50 (50)	28	M8 ⑥	8 - 9 (71 - 80)
	⏚	35	25 - 35 (-)	-	M8 ⊖	9.0 - 11 (79.7 - 97.4)
2225	R/L1, S/L2, T/L3	95	50 - 95 (95)	37	M10 ⑧	12 - 14 (107 - 124)
	U/T1, V/T2, W/T3	95	50 - 95 (95)	37	M10 ⑧	12 - 14 (107 - 124)
	-, -, +1, +1 *3 *4	50	25 - 50 (50)	28	M6 ⑤	8 - 9 (71 - 80)
	+3 *4	50	25 - 50 (50)	28	M8 ⑥	8 - 9 (71 - 80)
	⏚	50	25 - 50 (-)	-	M8 ⊖	9.0 - 11 (79.7 - 97.4)
2269	R/L1, S/L2, T/L3	70 × 2P	35 - 95 × 2P (70 - 95 × 2P)	-	M10 ⬡	20 (177)
	U/T1, V/T2, W/T3	70 × 2P	35 - 95 × 2P (70 - 95 × 2P)	-	M10 ⬡	20 (177)
	-, +1	120 × 2P	70 - 120 × 2P (120 × 2P)	-	M10 ⬡	20 (177)
	+3	70 × 2P	35 - 70 × 2P (70 × 2P)	-	M10 ⬡	20 (177)
	⏚	95	25 - 150 (-)	-	M10 ⊖	18 - 23 (159 - 204)
2354	R/L1, S/L2, T/L3	70 × 2P	35 - 95 × 2P (70 - 95 × 2P)	-	M10 ⬡	20 (177)
	U/T1, V/T2, W/T3	70 × 2P	35 - 95 × 2P (70 - 95 × 2P)	-	M10 ⬡	20 (177)
	-, +1	120 × 2P	70 - 120 × 2P (120 × 2P)	-	M10 ⬡	20 (177)
	+3	70 × 2P	35 - 70 × 2P (70 × 2P)	-	M10 ⬡	20 (177)
	⏚	95	95 - 150 (-)	-	M10 ⊖	18 - 23 (159 - 204)

Model	Terminal	Recomm. Gauge mm²	Applicable Gauge (IP20 Applicable Gauge *1) mm²	Wire Stripping Length *2 mm	Terminal Screw Size and Shape	Tightening Torque N·m (lbf·in)
2432	R/L1, S/L2, T/L3	150 × 2P	95 - 150 × 2P (150 × 2P)	-	M12	35 (310)
	U/T1, V/T2, W/T3	150 × 2P	95 - 150 × 2P (150 × 2P)	-	M12	35 (310)
	-, +1	185 × 2P	120 - 185 × 2P (185 × 2P)	-	M12	35 (310)
	+3	150 × 2P	95 - 150 × 2P (150 × 2P)	-	M12	35 (310)
	⏚	120	95 - 240 (-)	-	M12	32 - 40 (283 - 354)
2519	R/L1, S/L2, T/L3	150 × 2P	95 - 150 × 2P (150 × 2P)	-	M12	35 (310)
	U/T1, V/T2, W/T3	150 × 2P	95 - 150 × 2P (150 × 2P)	-	M12	35 (310)
	-, +1	185 × 2P	120 - 185 × 2P (185 × 2P)	-	M12	35 (310)
	+3	150 × 2P	95 - 150 × 2P (150 × 2P)	-	M12	35 (310)
	⏚	120	120 - 240 (-)	-	M12	32 - 40 (283 - 354)

*1 For IP20 protection, use wires that are in the range of applicable gauges.
*2 Remove insulation from the ends of wires to expose the length of wire shown.
*3 Terminals - and +1 have two screws. The Recommended Gauge is the wire gauge for one terminal.
*4 A junction terminal is necessary to connect a braking unit (CDBR-series) to terminals - and +3.

Three-Phase 400 V Class

Model	Terminal	Recomm. Gauge mm²	Applicable Gauge (IP20 Applicable Gauge *1) mm²	Wire Stripping Length *2 mm	Terminal Screw Size and Shape	Tightening Torque N·m (lbf·in)
4012	R/L1, S/L2, T/L3	2.5	2.5 (2.5)	10	M4	1.5 - 1.7 (13.5 - 15)
	U/T1, V/T2, W/T3	2.5	2.5 (2.5)	10	M4	1.5 - 1.7 (13.5 - 15)
	-, +1, +2	2.5	2.5 (2.5)	18	M5	2.3 - 2.5 (20.3 - 22.1)
	B1, B2	2.5	2.5 (2.5)	10	M4	1.5 - 1.7 (13.5 - 15)
	⏚	2.5	2.5 - 6 (-)	-	M4	1.2 - 1.5 (10.6 - 13.3)
4019	R/L1, S/L2, T/L3	2.5	2.5 (2.5)	10	M4	1.5 - 1.7 (13.5 - 15)
	U/T1, V/T2, W/T3	2.5	2.5 (2.5)	10	M4	1.5 - 1.7 (13.5 - 15)
	-, +1, +2	2.5	2.5 - 16 (2.5 - 16)	18	M5	2.3 - 2.5 (20.3 - 22.1)
	B1, B2	2.5	2.5 - 6 (2.5 - 6)	10	M4	1.5 - 1.7 (13.5 - 15)
	⏚	2.5	2.5 - 6 (-)	-	M5	2.0 - 2.5 (17.7 - 22.1)

Model	Terminal	Recomm. Gauge mm²	Applicable Gauge (IP20 Applicable Gauge *1) mm²	Wire Stripping Length *2 mm	Terminal Screw Size and Shape	Tightening Torque N·m (lbf·in)
4023	R/L1, S/L2, T/L3	2.5	2.5 - 4 (2.5 - 4)	10	M4 ⊖	1.5 - 1.7 (13.5 - 15)
	U/T1, V/T2, W/T3	2.5	2.5 - 4 (2.5 - 4)	10	M4 ⊖	1.5 - 1.7 (13.5 - 15)
	-, +1, +2	4	2.5 - 4 (2.5 - 4)	18	M5 ⊖	2.3 - 2.5 (20.3 - 22.1)
	B1, B2	2.5	2.5 - 6 (2.5 - 6)	10	M4 ⊖	1.5 - 1.7 (13.5 - 15)
	⏚	6	2.5 - 6 (-)	-	M5 ⊕	2.0 - 2.5 (17.7 - 22.1)
4030	R/L1, S/L2, T/L3	10	4 - 10 (10)	18	M5 ⊖	2.3 - 2.5 (20.3 - 22.1)
	U/T1, V/T2, W/T3	6	2.5 - 6 (6)	18	M5 ⊖	2.3 - 2.5 (20.3 - 22.1)
	-, +1, +2	10	4 - 10 (10)	20	M6 ❺	5 - 5.5 (45 - 49)
	B1, B2	2.5	2.5 - 10 (2.5 - 10)	10	M4 ⊖	1.5 - 1.7 (13.5 - 15)
	⏚	10	4 - 10 (-)	-	M6 ⊕	5.4 - 6.0 (44.3 - 48.7)
4039	R/L1, S/L2, T/L3	10	4 - 10 (10)	18	M5 ⊖	2.3 - 2.5 (20.3 - 22.1)
	U/T1, V/T2, W/T3	6	2.5 - 6 (6)	18	M5 ⊖	2.3 - 2.5 (20.3 - 22.1)
	-, +1, +2	10	4 - 10 (10)	20	M6 ❺	5 - 5.5 (45 - 49)
	B1, B2	2.5	2.5 - 10 (2.5 - 10)	10	M4 ⊖	1.5 - 1.7 (13.5 - 15)
	⏚	10	6 - 16 (-)	-	M6 ⊕	5.4 - 6.0 (44.3 - 48.7)
4049	R/L1, S/L2, T/L3	10	4 - 16 (4 - 16)	18	M5 ⊖	2.3 - 2.5 (19.8 - 22)
	U/T1, V/T2, W/T3	6	2.5 - 16 (6 - 16)	18	M5 ⊖	2.3 - 2.5 (19.8 - 22)
	-, +1, +2	16	6 - 16 (6 - 16)	18	M5 ⊖	2.3 - 2.5 (19.8 - 22)
	B1, B2	4	2.5 - 10 (2.5 - 10)	10	M4 ⊖	1.5 - 1.7 (13.5 - 15)
	⏚	16	6 - 16 (-)	-	M6 ⊕	5.4 - 6.0 (47.8 - 53.1)
4056	R/L1, S/L2, T/L3	6	2.5 - 16 (4 - 16)	18	M5 ⊖	2.3 - 2.5 (19.8 - 22)
	U/T1, V/T2, W/T3	10	4 - 16 (6 - 16)	18	M5 ⊖	2.3 - 2.5 (19.8 - 22)
	-, +1, +2	10	4 - 35 (6 - 35)	18	M5 ⊖	2.3 - 2.5 (19.8 - 22) *3
	B1, B2	4	2.5 - 16 (2.5 - 16)	10	M4 ⊖	1.5 - 1.7 (13.5 - 15)
	⏚	16	10 - 16 (-)	-	M6 ⊕	5.4 - 6.0 (47.8 - 53.1)

Model	Terminal	Recomm. Gauge mm²	Applicable Gauge (IP20 Applicable Gauge *1) mm²	Wire Stripping Length *2 mm	Terminal Screw Size and Shape	Tightening Torque N·m (lbf·in)
4075	R/L1, S/L2, T/L3	10	4 - 16 (4 - 16)	18	M5	2.3 - 2.5 (19.8 - 22)
	U/T1, V/T2, W/T3	10	4 - 25 (4 - 25)	18	M5	2.3 - 2.5 (19.8 - 22)
	-, +1	16	6 - 35 (6 - 35)	18	M5	2.3 - 2.5 (19.8 - 22) *3
	B1, B2	6	2.5 - 16 (2.5 - 16)	10	M4	1.5 - 1.7 (13.5 - 15)
	⏚	16	10 - 25 (-)	-	M6	5.4 - 6.0 (47.8 - 53.1)
4094	R/L1, S/L2, T/L3	16	6 - 25 (10 - 25)	18	M5	2.3 - 2.5 (19.8 - 22)
	U/T1, V/T2, W/T3	16	6 - 25 (10 - 25)	18	M5	2.3 - 2.5 (19.8 - 22)
	-, +1	25	10 - 25 (16 - 25)	20	M6	5 - 5.5 (45 - 49)
	B1, B2	10	4 - 35 (4 - 35)	18	M5	2.3 - 2.5 (19.8 - 22) *3
	⏚	16	16 - 25 (-)	-	M6	5.4 - 6.0 (47.8 - 53.1)
4114	R/L1, S/L2, T/L3	50	25 - 50 (50)	27	M6	8 - 9 (71 - 80)
	U/T1, V/T2, W/T3	50	25 - 50 (50)	27	M6	8 - 9 (71 - 80)
	-, +1	50	35 - 50 (50)	27	M8	10 - 12 (89 - 107)
	B1, B2	16	6 - 35 (6 - 35)	21	M6	3 - 3.5 (27 - 31)
	⏚	16	16 - 25 (-)	-	M6	5.4 - 6.0 (47.8 - 53.1)
4140	R/L1, S/L2, T/L3	95	50 - 95 (95)	37	M10	12 - 14 (107 - 124)
	U/T1, V/T2, W/T3	95	50 - 95 (95)	37	M10	12 - 14 (107 - 124)
	-, -, +1, +1 *4	50	25 - 50 (50)	28	M6	8 - 9 (71 - 80)
	B1, B2 *5	50	25 - 50 (50)	28	M8	8 - 9 (71 - 80)
	⏚	25	16 - 25 (-)	-	M8	9.0 - 11 (79.7 - 97.4)
4188	R/L1, S/L2, T/L3	95	50 - 95 (95)	37	M10	12 - 14 (107 - 124)
	U/T1, V/T2, W/T3	95	50 - 95 (95)	37	M10	12 - 14 (107 - 124)
	-, -, +1, +1 *4	50	25 - 50 (50)	28	M6	8 - 9 (71 - 80)
	B1, B2 *5	50	25 - 50 (50)	28	M8	8 - 9 (71 - 80)
	⏚	35	25 - 35 (-)	-	M8	9.0 - 11 (79.7 - 97.4)

Model	Terminal	Recomm. Gauge mm²	Applicable Gauge (IP20 Applicable Gauge *1) mm²	Wire Stripping Length *2 mm	Terminal Screw Size and Shape	Tightening Torque N·m (lbf·in)
4225	R/L1, S/L2, T/L3	70 × 2P	35 - 95 × 2P (70 - 95 × 2P)	-	M10	20 (177)
	U/T1, V/T2, W/T3	70 × 2P	35 - 95 × 2P (70 - 95 × 2P)	-	M10	20 (177)
	-, +1	120 × 2P	70 - 120 × 2P (120 × 2P)	-	M10	20 (177)
	+3	70 × 2P	35 - 70 × 2P (70 × 2P)	-	M10	20 (177)
	⏚	50	25 - 150 (-)	-	M10	18 - 23 (159 - 204)
4270	R/L1, S/L2, T/L3	70 × 2P	35 - 95 × 2P (70 - 95 × 2P)	-	M10	20 (177)
	U/T1, V/T2, W/T3	70 × 2P	35 - 95 × 2P (70 - 95 × 2P)	-	M10	20 (177)
	-, +1	120 × 2P	70 - 120 × 2P (120 × 2P)	-	M10	20 (177)
	+3	70 × 2P	35 - 70 × 2P (70 × 2P)	-	M10	20 (177)
	⏚	70	50 - 240 (-)	-	M10	18 - 23 (159 - 204)
4325	R/L1, S/L2, T/L3	70 × 2P	35 - 95 × 2P (70 - 95 × 2P)	-	M10	20 (177)
	U/T1, V/T2, W/T3	70 × 2P	35 - 95 × 2P (70 - 95 × 2P)	-	M10	20 (177)
	-, +1	120 × 2P	70 - 120 × 2P (120 × 2P)	-	M10	20 (177)
	+3	70 × 2P	35 - 70 × 2P (70 × 2P)	-	M10	20 (177)
	⏚	95	70 - 240 (-)	-	M10	18 - 23 (159 - 204)
4380	R/L1, S/L2, T/L3	150 × 2P	95 - 150 × 2P (150 × 2P)	-	M12	35 (310)
	U/T1, V/T2, W/T3	150 × 2P	95 - 150 × 2P (150 × 2P)	-	M12	35 (310)
	-, +1	185 × 2P	120 - 185 × 2P (185 × 2P)	-	M12	35 (310)
	+3	150 × 2P	95 - 150 × 2P (150 × 2P)	-	M12	35 (310)
	⏚	120	95 - 240 (-)	-	M12	32 - 40 (283 - 354)

*1 For IP20 protection, use wires that are in the range of applicable gauges.
*2 Remove insulation from the ends of wires to expose the length of wire shown.
*3 For wire gauges more than 30 mm², tighten to a tightening torque of 4.1 N·m to 4.5 N·m (36 lbf·in to 40 lbf·in).
*4 Terminals - and +1 have two screws. The Recommended Gauge is the wire gauge for one terminal.
*5 A junction terminal is necessary to connect a braking resistor unit (LKEB-series) to terminals B1 and B2.

◆ Main Circuit Terminal and Motor Wiring

This section outlines the various steps, precautions, and checkpoints for wiring the main circuit terminals and motor terminals.

⚠ WARNING Fire Hazard

Do not connect main power supply wiring to drive motor terminals U/T1, V/T2, and W/T3. Connect main power supply wiring to main circuit input terminals R/L1, S/L2, and T/L3.
Incorrect wiring can cause serious injury or death from fire.

⚠ WARNING Sudden Movement Hazard
Make sure that you align the phase order for the drive and motor when you connect the motor to drive output terminals U/T1, V/T2, and W/T3.
If the phase order is incorrect, it can cause the motor to run in reverse. If the motor accidentally runs in reverse, it can cause serious injury or death.

NOTICE
Do not connect phase-advancing capacitors, LC/RC noise filters, or leakage breakers (ELCB) to the motor circuit.
If you connect these devices to the output circuits, it can cause damage to the drive and connected equipment.

■ Cable Length Between Drive and Motor

When the wiring between the drive and the motor is too long, voltage drop along the motor cable can decrease motor torque, usually at low frequency output. If you connect motors in parallel with long motor cable, this is also a problem. Drive output current increases when the leakage current from the cable increases. An increase in leakage current can cause overcurrent and decrease the precision of the current detection.

Use the values in Table 3.3 to adjust the drive carrier frequency.

Table 3.3 Carrier Frequency against Cable Length Between Drive and Motor

Wiring Distance Between the Drive and Motor	10 m (32 ft) Maximum for Internal EMC Filter	15 m (49 ft) Maximum for No Internal EMC Filter
Carrier Frequency	15 kHz or less	15 kHz or less

Note:
- To set the carrier frequency in a drive that is operating more than one motor, calculate the cable length as the total distance of wiring to all connected motors.
- When you connect to a PM motor, it can be necessary to adjust the overcurrent detection. Refer to *L8-27: Overcurrent Detection Gain on page 650* for more information.

■ Ground Wiring

Follow the precautions to wire the ground for one drive or a series of drives.

⚠ WARNING Electrical Shock Hazard
Make sure that the protective ground wire aligns with IEC/EN 61800-5-1 and local safety regulations. As specified in IEC/EN 61800-5-1, wire the power supply to automatically de-energize when the protective ground wire disconnects. You can also connect a protective ground wire that has a minimum cross-sectional area of 10 mm² (copper wire) or 16 mm² (aluminum wire). The leakage current of the drive will be more than 3.5 mA in drive models 4012C to 4056C (with built-in EMC filter turned ON).
If the protective ground wire does not align with IEC/EN 61800-5-1 and local safety regulations, it can cause death or serious injury from electrical shock.

⚠ WARNING Electrical Shock Hazard
Ground the neutral point on the power supply of drive models 4xxxC to comply with the EMC Directive before you turn on the EMC filter.
If you turn ON the EMC filter, but you do not ground the neutral point, it can cause serious injury or death.

⚠ WARNING Electrical Shock Hazard
Use a ground wire that complies with technical standards on electrical equipment and use the minimum length of ground wire.
Incorrect equipment grounding can cause serious injury or death from dangerous electrical potentials on the equipment chassis.

⚠ WARNING Electrical Shock Hazard
Correctly ground the ground terminals. Obey federal and local electrical wiring codes for correct grounding methods. The maximum grounding resistance is
- **200 V class: ground to 100 Ω or less**
- **400 V class: ground to 10 Ω or less**

If you touch electrical equipment that is not grounded, it can cause serious injury or death.

Note:
- Only use the drive grounding wire to ground the drive. Do not share the ground wire with other devices such as welding machines or large-current electrical equipment. Incorrect equipment grounding can cause drive or equipment malfunction from electrical interference.
- To connect more than one drive to the same grounding circuit, follow the instructions in the instruction manual. Incorrect equipment grounding can cause drive or equipment malfunction from electrical interference.

When you connect more than one drive, refer to Figure 3.15. Do not loop the grounding wire.

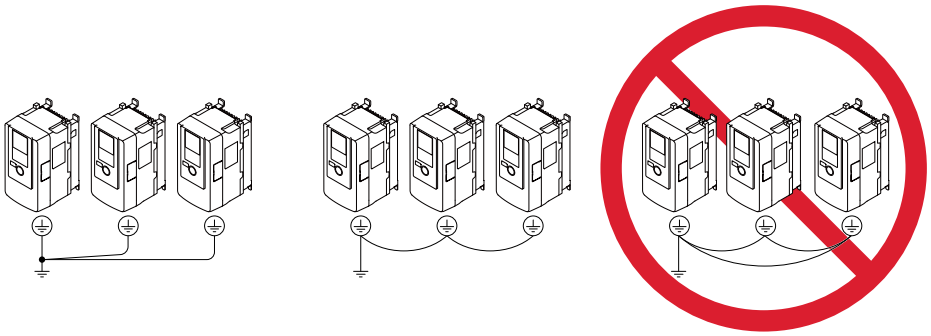

Figure 3.15 Wiring More than One Drive

■ Wiring the Main Circuit Terminal Block

⚠ WARNING Electrical Shock Hazard
Before you wire the main circuit terminals, make sure that MCCB and MC are OFF.
If you touch electrical equipment when MCCB and MC are ON, it can cause serious injury or death.

■ Main Circuit Configuration

The figures in this section show the schematic of the drive main circuit. The connections change when the drive capacity changes. The DC power supply for the main circuit also supplies power to the control circuit.

Note:
Drive models 2xxxA and 4xxxA do not have a built-in EMC filter.

⚠ WARNING Fire Hazard
Do not connect a braking resistor to terminals +1 or -. Use terminals B1 and B2 for the braking resistor connections.
If you connect a braking resistor to the incorrect terminals, it can cause damage to the drive and braking circuit and serious injury or death.

NOTICE
Do not use the negative DC bus terminal "-" as a ground terminal. This terminal is at high DC voltage potential.
Incorrect wiring connections can cause damage to the drive.

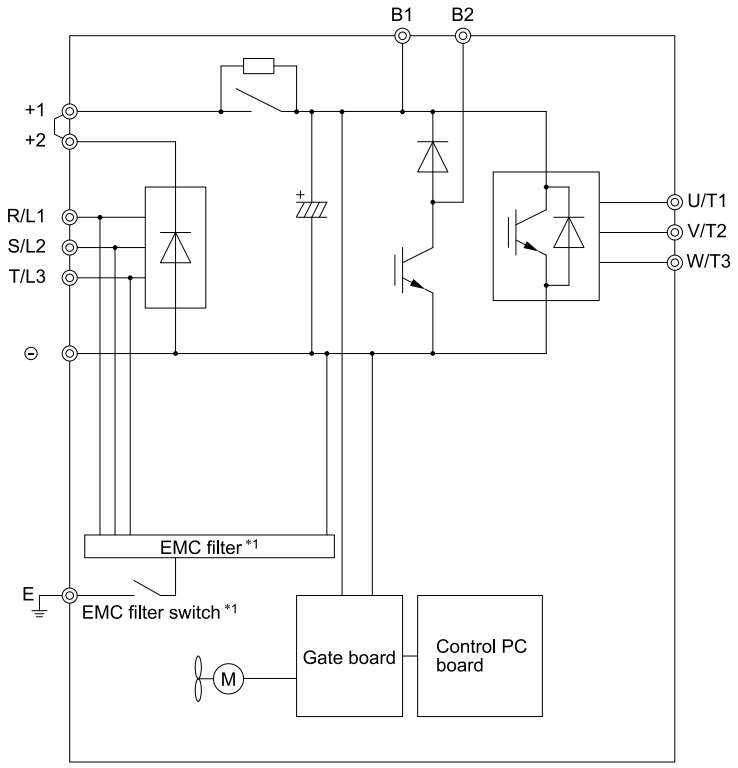

Figure 3.16 Drive Main Circuit Configuration (Models: 2022 to 2094, 4012 to 4049)

*1 Drive models 2xxx do not have EMC filter switches or EMC filters.

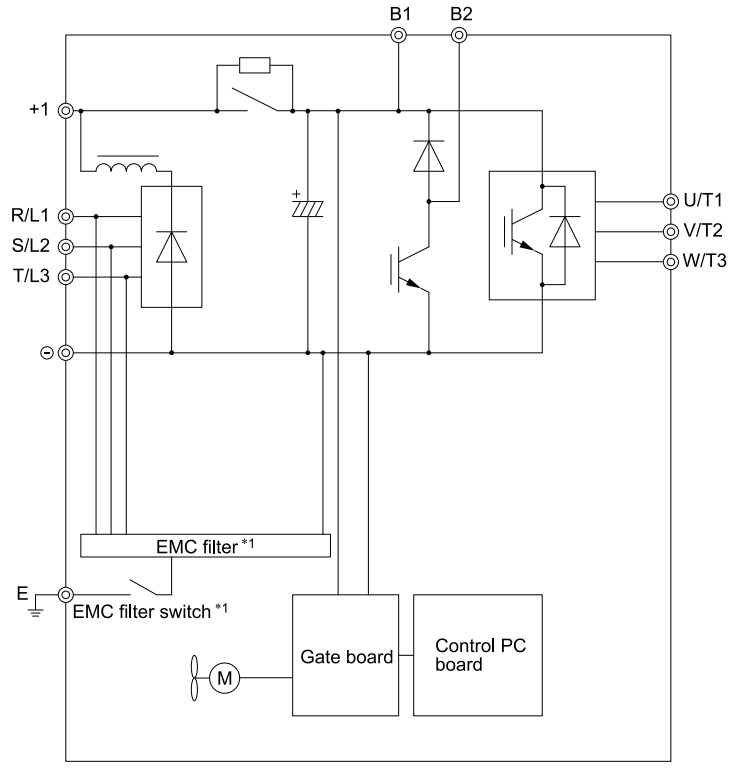

Figure 3.17 Drive Main Circuit Configuration (Models: 2110 to 2144, 4056 to 4188)

*1 Drive models 2xxx and 4075 to 4188 do not have EMC filter switches or EMC filters.

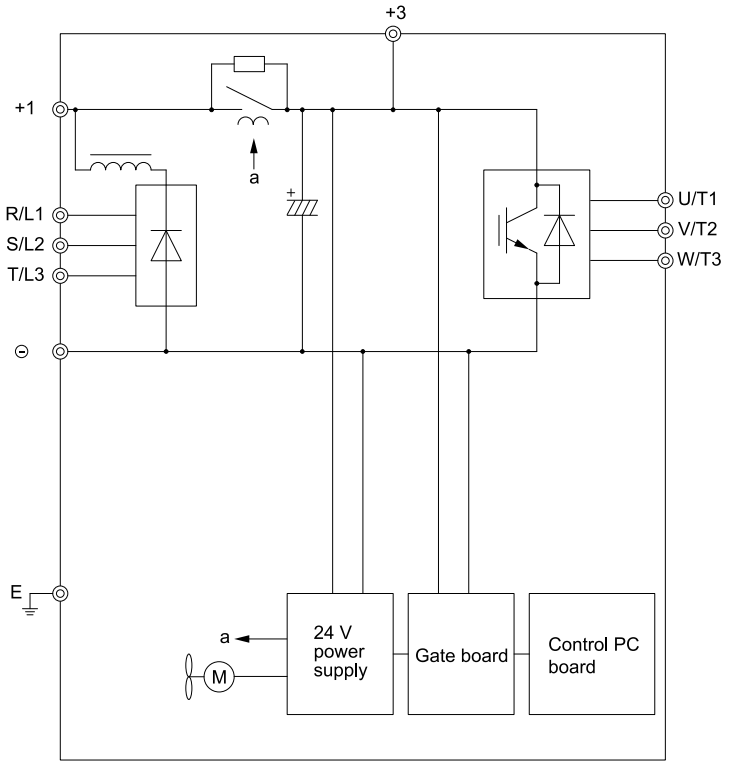

Figure 3.18 Drive Main Circuit Configuration (Models: 2181 to 2519, 4225 to 4380)

◆ Protection of Main Circuit Terminals

When you wire the main circuit terminals, do not let cable ends go near terminals or the drive. If you use crimped terminals, make sure that you also use insulation caps.

3.4 Main Circuit Terminal Block Wiring Procedure

⚠ DANGER Electrical Shock Hazard

Do not examine, connect, or disconnect wiring on an energized drive. Before servicing, disconnect all power to the equipment and wait for the time specified on the warning label at a minimum. The internal capacitor stays charged after the drive is de-energized. The charge indicator LED extinguishes when the DC bus voltage decreases below 50 Vdc. When all indicators are OFF, remove the covers before measuring for dangerous voltages to make sure that the drive is safe.
If you do work on the drive when it is energized, it will cause serious injury or death from electrical shock.

◆ Wire the Main Circuit Terminal Block

■ Notes on Wiring the Main Circuit Terminal Block

Read these notes before you wire the main circuit terminal block.

- Use UL-Listed, vinyl-coated insulated copper wires for operation with a continuous maximum permitted temperature of 75 °C at 600 V.
- Remove all unwanted objects that are near the terminal block connections.
- Remove the insulation from the connection wires to the wire stripping lengths shown in the manual.
- Do not use bent or crushed wires. Remove the damaged end of the wire before you use it. Incorrect connections can cause death or serious injury from fire.
- Do not solder stranded wire. Soldered wire connections can become loose over time and cause unsatisfactory drive performance.
- If you use stranded wire, make sure that all of the wire strands are in the connection. Also, do not twist the stranded wire too much. Incorrect connections can cause death or serious injury from fire.
- Put the wire all the way into the terminal block. Remove the insulation from the wire to the recommended wire stripping length to fit the wire with insulation in the plastic housing.
- Use a torque driver, torque ratchet, or torque wrench for the screws. A slotted driver or a hex tool will be necessary to wire the screw clamp terminal. Use applicable tools as specified by the recommended conditions in the product manual.
- If you use power tools to tighten the terminal screws, use a low speed setting (300 r/min to 400 r/min). Failure to obey can cause damage to the terminal screws.
- Users can purchase wiring tools from Yaskawa. Contact Yaskawa or your nearest sales representative for more information.
- Wire gauges on existing drive models to be replaced can be different than the wire gauge ranges on new drives. Contact Yaskawa or your nearest sales representative for more information about the connection procedures.
- Do not tighten the terminal screws at an angle of 5 degrees or more. Failure to obey can cause damage to the terminal screws.
- If you damage a terminal screw, contact Yaskawa or your nearest sales representative.

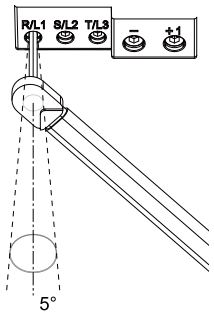

Figure 3.19 Permitted Angle

- Put the bit all the way into the hex socket to tighten the hex socket cap screw.
- When you tighten slotted screws, hold the straight-edge screwdriver perpendicularly to the screw. Make sure that you align the end of the straight-edge screwdriver with the screw groove.

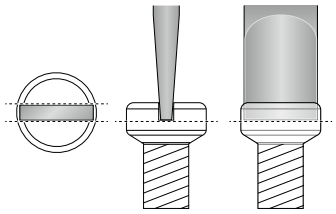

Figure 3.20 Tightening Slotted Screws

- After you connect the wires to the terminal block, lightly pull on the wires to make sure that they do not come out of the terminals.
- Remove the correct section of the wiring cover to make wiring easier.
- Do not let strain on the wiring cause damage. Use a strain relief near the wiring to release the tension. Refer to Figure 3.21 for an example.

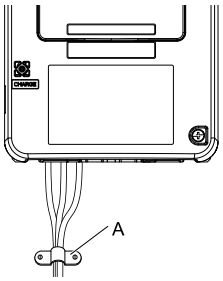

A - Cable clamp

Figure 3.21 Strain Relief Example

Table 3.4 Recommended Wiring Tools

Screw Size	Screw Shape	Adapter	Bit		Torque Driver Model (Tightening Torque)	Torque Wrench
			Model	Manufacturer		
M4	⊖	Bit	SF-BIT-SL 1,0X4,0-70	PHOENIX CONTACT	TSD-M 3NM (1.2 - 3 N·m (10.6 - 26.6 lbf·in))	N/A
M5 *1*	⊖	Bit	SF-BIT-SL 1,2X6,5-70	PHOENIX CONTACT	Wire Gauge ≤ 25 mm ² (AWG 10): TSD-M 3NM (1.2 - 3 N·m (10.6 - 26.6 lbf·in))	Wire Gauge ≤ 25 mm ² (AWG 10): N/A
					Wire Gauge ≥ 30 mm ² (AWG 8): N/A	Wire Gauge ≥ 30 mm ² (AWG 8): 4.1 - 4.5 N·m (36.3 - 39.8 lbf·in) *2 *3*
M6	⑤	Bit	SF-BIT-HEX 5-50	PHOENIX CONTACT	N/A	5 - 9 N·m (44.3 - 79.9 lbf·in) *2 *3*
	⊖	Bit	SF-BIT-SL 1,2X6,5-70	PHOENIX CONTACT	N/A	3 - 3.5 N·m (26.6 - 31.0 lbf·in) *2 *3*
M8	⑥	Bit	SF-BIT-HEX 6-50	PHOENIX CONTACT	N/A	8 - 12 N·m (70.8 - 106.2 lbf·in) *2 *3*
M10	⑧	Bit	SF-BIT-HEX 8-50	PHOENIX CONTACT	N/A	12 - 14 N·m (106.2 - 123.9 lbf·in) *2 *3*

*1 When wiring drive models 2059, 4094, and smaller, select the correct tools for the wire gauge.
*2 Use 6.35 mm (0.25 in) bit socket holder.
*3 Use a torque wrench that can apply this torque measurement range.

■ Main Circuit Terminal Block Wiring Procedure (Models: 2022 to 2225 and 4012 to 4188)

Remove the keypad and front cover before wiring the main circuit terminal block.

1. Pull the wiring cover away from the drive to remove it.

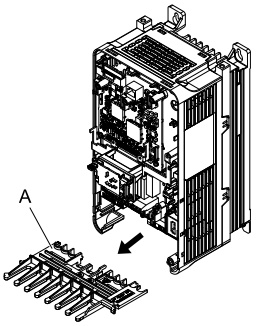

A - Wiring cover

Figure 3.22 Remove the Wiring Cover

2. Put the end of a prepared wire into the terminal block.

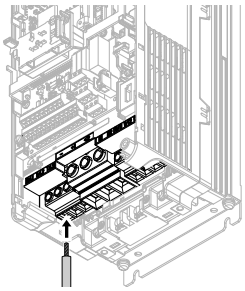

Figure 3.23 Install the Electrical Wire

Note:
If there is a jumper between terminals +1 and +2, loosen the terminal block screws and remove the jumper before wiring the terminals.

3. Tighten the screws to the specified torque.

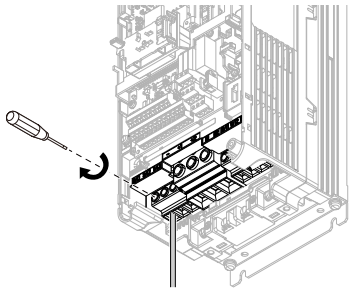

Figure 3.24 Tighten Terminal Block Screws

4. Examine the signal from the wired terminal and use a diagonal-cutting pliers to remove areas of the wiring cover cutaway section.
   To remove the wiring cover, cut off the portion shown in Figure 3.25.

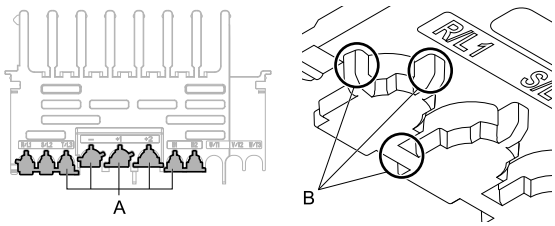

A - Cutaway sections

B - Cut this portion with a diagonal-cutting pliers

Figure 3.25 Clip the Cutaway Section of the Wiring Cover

Note:
- Different drive models have different wiring cover shapes.
- Only clip the section of the wiring cover that applies to the wired terminal. If you clip areas that do not apply to wired terminals, the protective enclosure will not keep its IP20 protective level.
- Tightly hold the cutaway section when removing pieces of the cutaway section. Pieces of the cutaway section can fly out and cause injury.
- Make sure that the clipped section does not cause damage to the wires.
- If you use wires that are not specified by Yaskawa, the protective enclosure could lose its IP20 protective level, although the wiring cover is correct. Contact Yaskawa or your nearest sales representative for more information.

5. Put the wiring cover in its initial position. Put the cables through the holes cut from the wiring cover.

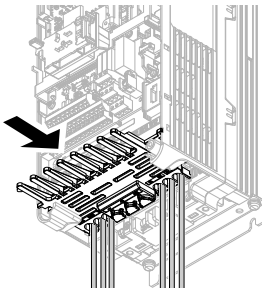

Figure 3.26 Reattach the Wiring Cover

6. Install the front cover and the keypad to their initial positions.

■ Main Circuit Terminal Block Wiring Procedure (Models: 2269 to 2519 and 4225 to 4380)

Note:
- Be sure to use only wires with the correct size, stripped wire length, and tightening torque as specified by Yaskawa.
- Use tools that fit the shape of the screw head to tighten and loosen the terminal block screws.
- After the wiring, do not twist or shake the electrical wires too much.
- Make sure that there are no loose stranded wires or frayed wires after wiring is complete.

Remove the terminal cover before you wire the main circuit terminal block.

1. Remove the screws on the terminal block cover and pull the terminal block cover away from the drive. Pull the wiring cover away from the drive to remove the wiring cover after removing the terminal block cover.

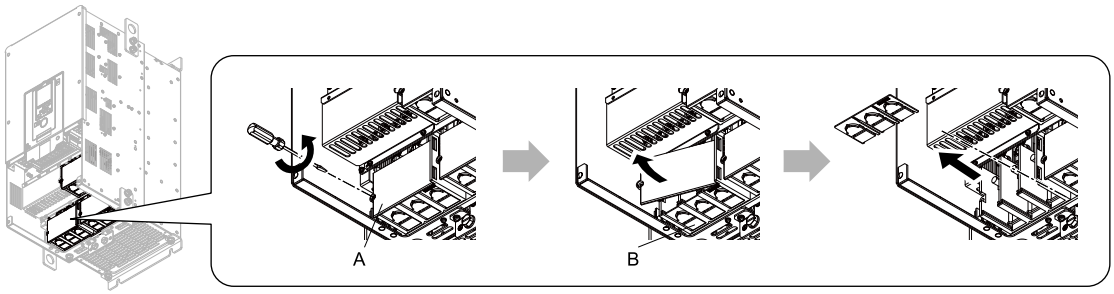

A - Terminal block cover **B - Wiring cover**

Figure 3.27 Remove the Wiring Cover

2. Remove the terminal block nut.

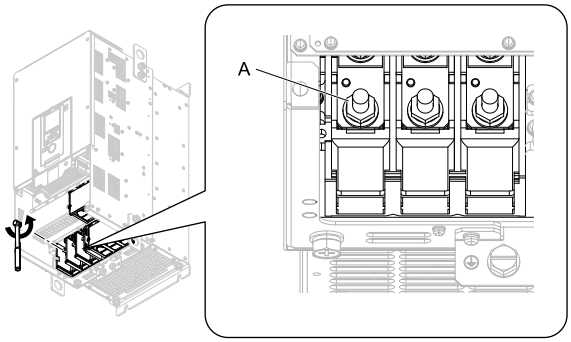

A - Nut

Figure 3.28 Remove the Terminal Block Nut

3. Wire the closed-loop crimp terminal to the main circuit terminal block.

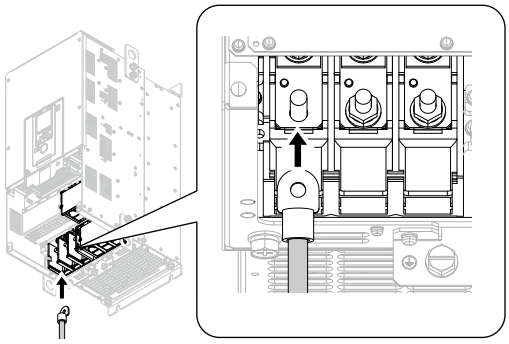

Figure 3.29 Install the Electrical Wire

4. Tighten the nut to the specified torque.

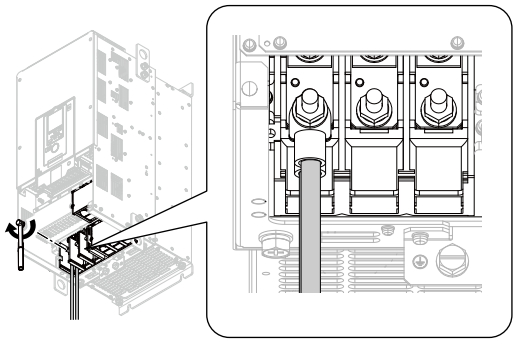

Figure 3.30 Tighten the Terminal Block Nut

5. Examine the signal from the wired terminal and use a diagonal-cutting pliers to remove areas of the wiring cover cutaway section.
   Cut the areas shown in Figure 3.31.

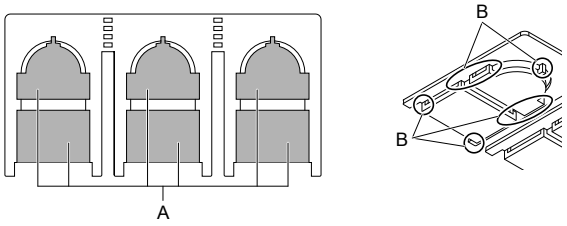

A - Cutaway sections

B - Use a diagonal-cutting pliers to clip this area.

Figure 3.31 Clip the Cutaway Section of the Wiring Cover

Note:
- Different drive models have different wiring cover shapes.
- Clip only the areas from the wiring cover that apply to the wired terminal. If you clip areas that do not apply to wired terminals, the drive will not keep its IP20 protective level.
- When you clip pieces of the cutaway section, tightly hold the cutaway section. Pieces of the cutaway section can fly out and cause injury.
- Make sure that the clipped section does not cause damage to the wires.
- Although the wiring cover is correct, if you use wires that are not specified by Yaskawa, the drive will not keep its IP20 protective level.
- When you use the recommended gauge for the electrical wires, it is not necessary to attach the wiring cover of the main circuit power input terminal and the drive output terminal. When you use the applicable gauge for the electrical wires, attach the wiring cover.

6. Attach the wiring cover and terminal block cover to their initial positions and tighten the screws on the terminal block cover.

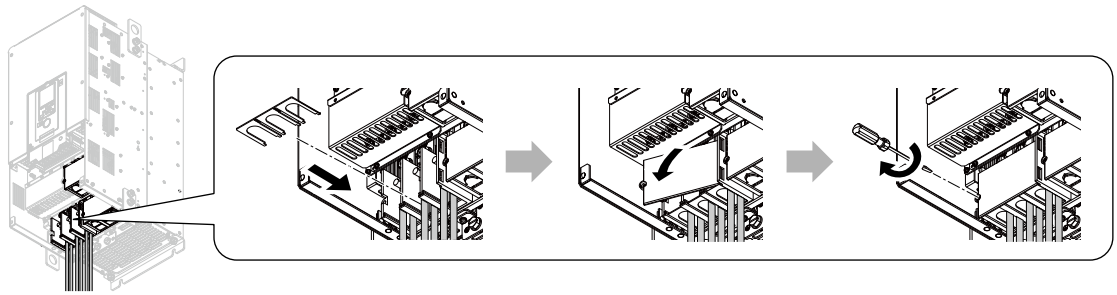

Figure 3.32 Reattach the Wiring Cover

7. Put the terminal cover back in its initial position.

3.5 Control Circuit Wiring

This section gives information about how to correctly wire the control circuit.

◆ Control Circuit Connection Diagram

Wire the drive control circuit as shown in Figure 3.33.

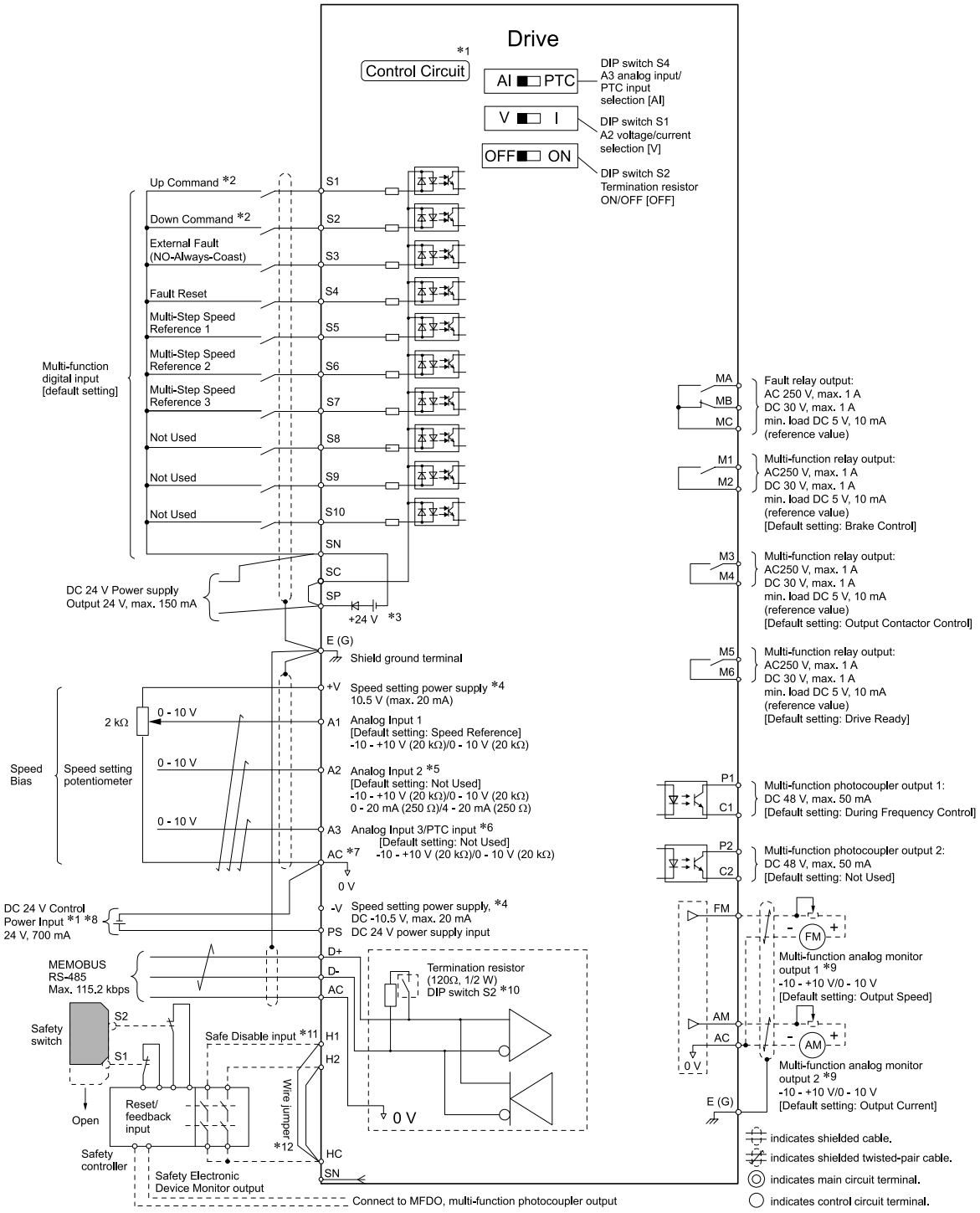

Figure 3.33 Control Circuit Connection Diagram

*1 Connect a 24 V Control power input supply to terminals PS-AC to operate the control circuit while the main circuit power supply is OFF.

*2 Set up the wiring to rotate the motor forward (FWD) when an elevator car moves upward, and to rotate the motor reverse (REV) when an elevator car moves downward in all control methods.

*3 To set the MFDI power supply (Sinking/Sourcing Mode or internal/external power supply), install or remove a jumper between terminals SC-SP or SC-SN depending on the application.

NOTICE **Damage to Equipment**
Do not close the circuit between terminals SP-SN.
If you close the circuits between terminals SC-SP and terminals SC-SN at the same time, it will cause damage to the drive.

- Sinking Mode, Internal power supply: Install the jumper to close the circuit between terminals SC-SP.

  NOTICE **Damage to Equipment**
  Do not close the circuit between terminals SC-SN.
  If you close the circuits between terminals SC-SP and terminals SC-SN at the same time, it will cause damage to the drive.

- Sourcing Mode, Internal power supply: Install the jumper to close the circuit between terminals SC-SN.

  NOTICE **Damage to Equipment**
  Do not close the circuit between terminals SC-SP.
  If you close the circuits between terminals SC-SP and terminals SC-SN at the same time, it will cause damage to the drive.

- External power supply: Remove the jumper from the MFDI terminals. It is not necessary to close the circuit between terminals SC-SP and terminals SC-SN.

*4 The output current capacity of the +V and -V terminals on the control circuit is 20 mA.

NOTICE
Do not install a jumper between terminals +V, -V, and AC.
A closed circuit between these terminals will cause damage to the drive.

*5 DIP switch S1 sets terminal A2 for voltage or current input. The default setting for S1 is voltage input (“V” side).
*6 DIP switch S4 sets terminal A3 for analog or PTC input.
*7 Do not ground the control circuit terminals AC or connect them to the drive chassis.

NOTICE
Do not ground the AC control circuit terminals and only connect the AC terminals as specified by the product instructions.
If you connect the AC terminals incorrectly, it can cause damage to the drive.

*8 Do not connect terminals PS and AC inversely. If you connect the wires to the incorrect terminals, it will cause damage to the drive.
*9 Use multi-function analog monitor outputs with analog frequency meters, ammeters, voltmeters, and wattmeters. Do not use monitor outputs with feedback-type signal devices.
*10 Set DIP switch S2 to the ON position to enable the termination resistor in the last drive when you use MEMOBUS/Modbus communications.
*11 To use the internal power supply with the Safe Disable input, use sourcing mode.
*12 Disconnect the wire jumpers between H1 and HC and H2 and HC to use the Safe Disable input.

◆ Control Circuit Terminal Block Functions

Hx-xx parameters set functions for the multi-function input and output terminals.

⚠ WARNING **Sudden Movement Hazard**
Correctly wire and test all control circuits to make sure that the control circuits operate correctly. If you use a drive that has incorrect control circuit wiring or operation, it can cause death or serious injury.

NOTICE **Damage to Equipment**
Do not energize and de-energize the drive more frequently than one time each 5 minutes (48 times/day maximum).
If you frequently energize and de-energize the drive, it can cause drive failure.

■ Input Terminals

Refer to Table 3.5 for a list of input terminals and functions.

Table 3.5 Multi-Function Input Terminals

Type	Terminal	Name (Default)	Function (Signal Level)
MFDI	S1	MFDI selection 1 (ON: Up Command, OFF: Stop)	• Photocoupler • 24 V, 6 mA **Note:** Install the wire jumpers between terminals SC-SP and SC-SN to set the MFDI power supply (sinking/sourcing mode or internal/external power supply). • Sinking Mode: Install a jumper between terminals SC and SP. **NOTICE** **Damage to Equipment** **Do not close the circuit between terminals SC-SN.** **If you close the circuits between terminals SC-SP and terminals SC-SN at the same time, it will cause damage to the drive.** • Sourcing Mode: Install a jumper between terminals SC and SN. **NOTICE** **Damage to Equipment** **Do not close the circuit between terminals SC-SP.** **If you close the circuits between terminals SC-SP and terminals SC-SN at the same time, it will cause damage to the drive.** • External power supply: No jumper necessary between terminals SC-SN and terminals SC-SP.
	S2	MFDI selection 2 (ON: Down Command, OFF: Stop)	
	S3	MFDI selection 3 (External Fault (NO-Always-Coast))	
	S4	MFDI selection 4 (Fault Reset)	
	S5	MFDI selection 5 (Multi-Step Speed Reference 1)	
	S6	MFDI selection 6 (Multi-Step Speed Reference 2)	
	S7	MFDI selection 7 (Multi-Step Speed Reference 3)	
	S8	MFDI selection 8 (Not Used)	
	S9	MFDI selection 9 (Not Used)	
	S10	MFDI selection 10 (Not Used)	
	SN	MFDI power supply 0 V	MFDI power supply, 24 V (maximum 150 mA)
	SC	MFDI selection common	**NOTICE** **Damage to Equipment** **Do not close the circuit between terminals SP-SN.** **If you close the circuits between terminals SC-SP and terminals SC-SN at the same time, it will cause damage to the drive.**
	SP	MFDI power supply +24 Vdc	
Safe Disable Input	H1	Safe Disable input 1	Remove the jumper between terminals H1-HC and H2-HC to use the Safe Disable input. • 24 V, 6 mA • ON: Normal operation • OFF: Coasting motor • Internal impedance: 4.7 kΩ • Minimum OFF time of 2 ms.
	H2	Safe Disable input 2	
	HC	Safe Disable function common	Safe Disable function common **NOTICE** **Do not close the circuit between terminals HC and SN.** **A closed circuit between these terminals will cause damage to the drive.**
Master Speed Reference	+V	Power supply for speed setting	10.5 V (allowable current: 20 mA maximum)
	-V	Power supply for speed setting	-10.5 V (allowable current: 20 mA maximum)
	A1	MFAI1 (Speed Reference)	Voltage input Select the signal level with *H3-01 [Terminal A1 Signal Level Select]*. • -10 V to +10 V/-100% to +100% (input impedance: 20 kΩ) • 0 V to 10 V/100% (input impedance: 20 kΩ)
	A2	MFAI2 (Not Used)	Voltage input or current input Select terminal A2 with DIP switch S1 and *H3-09 [Terminal A2 Signal Level Select]*. • -10 V to +10 V/-100% to +100% (input impedance: 20 kΩ) • 0 V to 10 V/100% (input impedance: 20 kΩ) • 4 mA to 20 mA/100%, 0 mA to 20 mA/100% (input impedance: 250 Ω)
	A3	MFAI3/PTC input (Not Used)	• Voltage input Select the signal level with *H3-05 [Terminal A3 Signal Level Select]*. – -10 V to +10 V/-100% to +100% (input impedance: 20 kΩ) – 0 V to 10 V/100% (input impedance: 20 kΩ) • PTC input (Motor Overheat Protection) Set DIP switch S4 to "PTC" to set terminal A3 for PTC input.
	AC	Speed reference common	0 V
	E (G)	Connecting shielded cable	-

■ Output Terminals

Refer to Table 3.6 and Table 3.7 for a list of output terminals and functions.

Table 3.6 Control Circuit Output Terminals

Type	Terminal	Name (Default)	Function (Signal Level)
Fault Relay Output	MA	N.O. output (Fault)	• Relay output • 30 Vdc, 10 mA to 1 A • 250 Vac, 10 mA to 1 A • Minimum load: 5 V, 10 mA (Reference value)
	MB	N.C. output (Fault)	
	MC	Digital output common	
MFDO	M1	MFDO (Brake Control)	• Relay output • 30 Vdc, 10 mA to 1 A • 250 Vac, 10 mA to 1 A • Minimum load: 5 V, 10 mA (Reference value) **Note:** Do not set functions that frequently switch ON/OFF to MFDO (M1 to M6) because this will decrease the performance life of the relay contacts. Yaskawa estimates switching life at 200,000 times (assumes 1 A, resistive load).
	M2		
	M3	MFDO (Output Contactor Control)	
	M4		
	M5	MFDO (Drive Ready)	
	M6		
Multi-Function Photocoupler Output	P1	Multi-function photocoupler output (During Frequency Output)	• Photocoupler output • 48 V, 2 mA to 50 mA **Note:** Connect a flywheel diode as shown in Figure 3.34 when you drive a reactive load, for example a relay coil. Make sure that the diode rating is larger than the circuit voltage.
	C1		
	P2	Multi-function photocoupler output (Not Used)	
	C2		

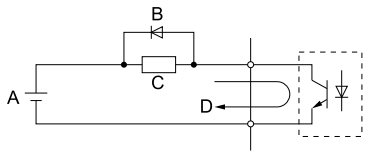

A - External power, 48 V maximum
B - Flywheel diode
C - Coil
D - 50 mA or less

Figure 3.34 Connecting a Flywheel Diode

Table 3.7 Control Circuit Monitor Output Terminals

Type	Terminal	Name (Default)	Function (Signal Level)
Monitor Output	FM	Analog monitor output 1 (Output Speed)	Voltage output • 0 V to 10 V/0% to 100% • -10 V to +10 V/-100% to +100% **Note:** Select with *H4-07 [Terminal FM Signal Level Select]* or *H4-08 [Terminal AM Signal Level Select]*.
	AM	Analog monitor output 2 (Output Current)	
	AC	Monitor common	0 V

■ External Power Supply Input Terminals

Refer to Table 3.8 for a list of the functions of the external power supply input terminals.

Table 3.8 External Power Supply Input Terminals

Type	Terminal	Name (Default)	Function
External Power Supply Input Terminals	PS	External 24 V power supply input	Supplies backup power to the drive control circuit, keypad, and option board. 21.6 Vdc to 26.4 Vdc, 700 mA
	AC	External 24 V power supply ground	0 V

Alarm Display When You Use External 24 V Power Supply

When you use an external 24 V power supply, the drive detects an alarm as shown in Table 3.9 if you set *o2-23 [External 24V Powerloss Detection]* and *o2-26 [Alarm Display at Ext. 24V Power]* for the main circuit power supply. Set the alarm display as necessary.

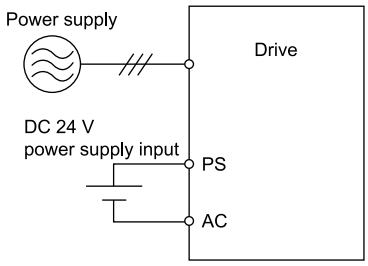

Table 3.9 Power Supply and Alarm Display

Main Circuit Power Supply	External 24 V Power Supply	o2-23 [External 24V Powerloss Detection]	o2-26 [Alarm Display at Ext. 24V Power]	Alarm Display
ON	ON	-	-	-
ON	OFF	0 [Disabled]	-	-
		1 [Enabled]	-	*L24v [Loss of External Power 24 Supply]*
OFF	ON	-	0 [Disabled]	"Ready" LED light flashes quickly
		-	1 [Enabled]	*EP24v [External Power 24V Supply]*

Operation When Using External 24 V Power Supply

To operate the drive, de-energize the main circuit power supply and connect an external 24 V power supply to terminals PS-AC.

Function	Operation	Solution
Keypad	The keypad operates the same as when the main circuit power supply is ON. The drive will not detect *oPr [Keypad Connection Fault]*.	-
Data Log	The data log function operates the same as when the main circuit power supply is ON.	-
Communications by Communication Option or MEMOBUS/Modbus Communication Terminals	Communication operates the same as when the main circuit power supply is ON.	-
MFAI	MFAI operates the same as when the main circuit power supply is ON.	-
MFAO	MFAO operates the same as when the main circuit power supply is ON.	-
MFDI	MFDI does not operate when the main circuit power supply of the drive is OFF.	Connect the external 24 V power supply to the MFDI selection common terminal (SC). *1
MFDO Multi-Function Photocoupler Output Fault Relay Output Terminal	MFDO operates the same as when the main circuit power supply is ON. *2	-
Encoder Option Speed Detection (PG-B3, PG-X3, PG-F3, PG-E3)	Encoder options do not operate when the main circuit power supply of the drive is OFF.	When you use an encoder, make sure that the drive main circuit power supply is ON. *3
Analog Output Option (AO-A3)	Analog output options operate the same as when the main circuit power supply is ON.	-
Digital Input Option (DI-A3)	Digital input options do not operate when the main circuit power supply of the drive is OFF.	Connect the external 24 V power supply to the input signal common terminal (SC). *1
Digital Output Option (DO-A3)	Digital output options operate the same as when the main circuit power supply is ON.	-

*1 When you use MFDI and a Digital Input option (DI-A3), wire the terminals as shown in *Wiring MFDI Terminals on page 86* or *Wiring Digital Input Option (DI-A3) on page 86*.

*2 When the main circuit power supply of the drive turns off, and you remove the cause of a fault and do a fault reset from the keypad, the fault relay output terminals and the MFDO terminals set for *H2-xx = E, 10E [Fault]* will change status.

*3 If the motor shaft can rotate while the 24 V control power supply is energized and the main circuit power supply is de-energized, re-energize the 24 V control power supply and energize the main circuit power supply.

When you use an external 24 V power supply, if you de-energize the main circuit power supply, the encoder option will not operate, even when you connect the external 24 V power supply to terminals PS-AC. When you use an encoder option, energize the drive main circuit power supply.

When the drive is receiving only 24 V power in Standby Mode, make sure that you lock the mechanical brake on the motor shaft.

Note:

Yaskawa recommends that you use different external power supplies for the external power supply input terminals (PS-AC) and MFDI selection common terminal (SC) / Input signal common terminal (SC).

Wiring MFDI Terminals

If you de-energize the main circuit power supply, the MFDI terminals will not operate, even when you connect the external 24 V power supply to terminals PS-AC. When you set N.O. functions to *H1-xx [MFDI Function Selection]*, MFDI terminals always deactivate. When you set N.C. functions, MFDI terminals always activate. Connect the external 24 V power supply to the MFDI selection common terminal (SC).

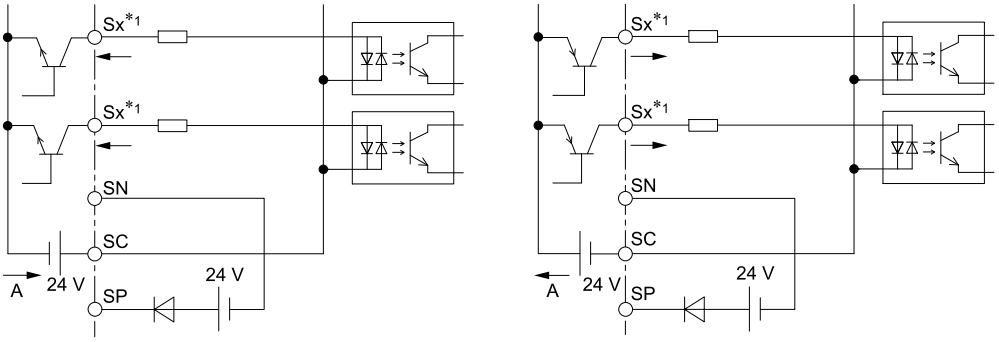

A - External power supply

Figure 3.35 Wiring MFDI Terminals

*1 The terminal Sx is one of the MFDI terminals S1 to S10.

Wiring Digital Input Option (DI-A3)

If you de-energize the main circuit power supply, the Digital Input Option terminals will not operate, even when you connect the external 24 V power supply to terminals PS-AC. When you set N.O. functions to *F3-xx [Terminal Dx Function Selection]*, the input terminals on the digital input option always deactivate. When you set N.C. functions, the input terminals on the digital input option always activate. Connect the external 24 V power supply to the Input signal common terminal (SC).

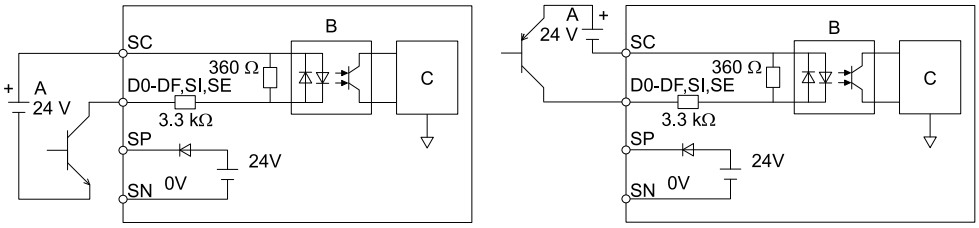

A - External power supply
B - Photocoupler
C - Signal processor

Figure 3.36 Wiring Digital Input Option (DI-A3)

■ Serial Communication Terminals

Refer to Table 3.10 for a list of serial communication terminals and functions.

Table 3.10 Serial Communication Terminals

Type	Terminal	Terminal Name	Function (Signal Level)	
Modbus Communication	D+	Communication input/output (+)	MEMOBUS/Modbus communications Use an RS-485 cable to connect the drive. **Note:** Set DIP switch S2 to ON to enable the termination resistor in the last drive in a MEMOBUS/Modbus network.	• RS-485 • MEMOBUS/Modbus communication protocol • Maximum 115.2 kbps
	D-	Communication output (-)		
	AC	Shield ground	0 V	

◆ Control Circuit Terminals

■ Terminal Configuration

The control circuit terminals are in the positions shown in Figure 3.37

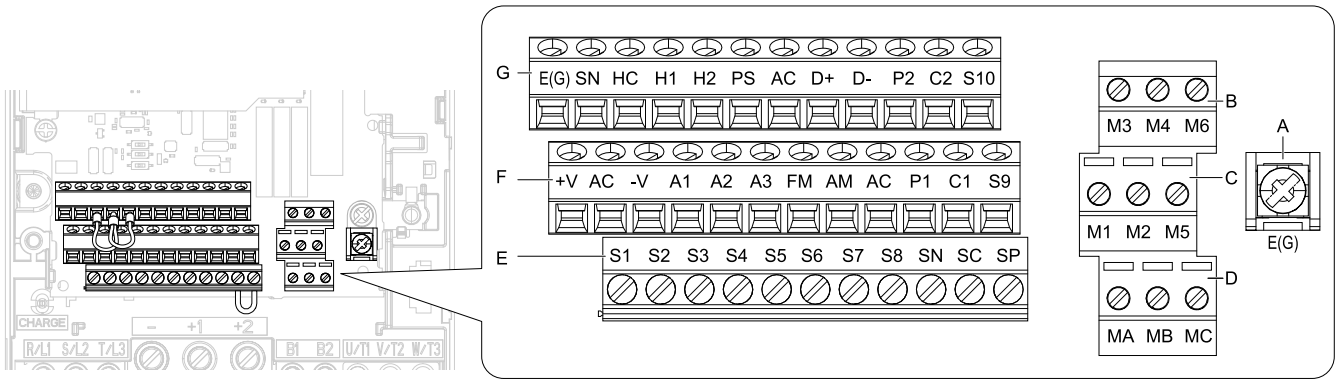

Figure 3.37 Control Circuit Terminal Arrangement

The tightening torque for the terminal screws is shown on the reverse side or the lower front side of the front cover.

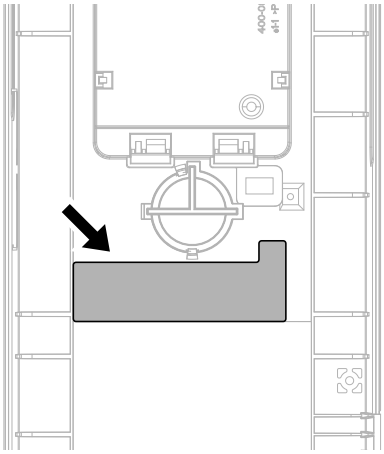

Figure 3.38 Tightening Torque Display Location (Reverse Side of the Front Cover)

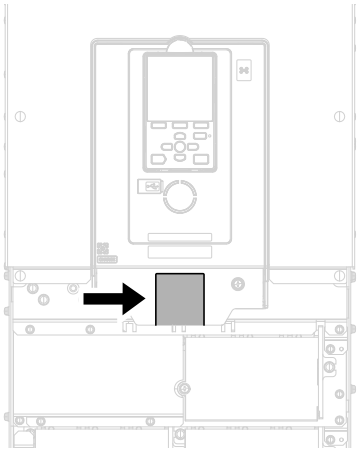

Figure 3.39 Tightening Torque Display Location (Lower Front Side of the Front Cover)

■ Wire Gauges and Tightening Torques

Use the tables in this section to select the correct wires. Use shielded wire to wire the control circuit terminal block. Use crimp ferrules on the wire ends to make the wiring procedure easier and more reliable.

Table 3.11 Control Circuit Wire Gauges and Tightening Torques

Terminal Block	Terminal	Screw Size	Tightening Torque N·m (lbf·in)	Bare Wire		Crimp Ferrule	
				Recomm. Gauge mm² (AWG)	Applicable Gauge mm² (AWG)	Recomm. Gauge mm² (AWG)	Applicable Gauge mm² (AWG)
TB1	S1 - S8, SN, SC, SP	M3	0.5 - 0.6 (4.4 - 5.3)	0.75 (18)	• Stranded wire 0.2 - 1.0 (24 - 18) • Solid wire 0.2 - 1.5 (24 - 16)	0.5 (20)	0.25 - 0.5 (24 - 20)
TB2-1	MA, MB, MC						
TB2-2	M1, M2, M5						
TB2-3	M3, M4, M6						
TB3	+V, AC, -V, A1, A2, A3, FM, AM, AC, P1, C1, S9						
TB4	E (G), SN, HC, H1, H2, PS, AC, D+, D-, P2, C2, S10						
TB5	E (G)	M3.5	0.5 - 1.0 (4.4 - 8.9)	0.5 - 2 (20 - 14)	1.25 (12)	-	-

■ Crimp Ferrules

Attach an insulated sleeve when you use crimp ferrules. Refer to Table 3.12 for the recommended external dimensions and model numbers of crimp ferrules.

Use the CRIMPFOX 6, a crimping tool made by PHOENIX CONTACT.

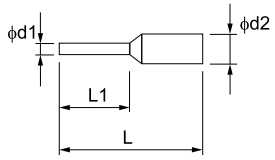

Figure 3.40 External Dimensions of Crimp Ferrules

Table 3.12 Crimp Ferrule Models and Sizes

Wire Gauge mm² (AWG)	Model	L (mm)	L1 (mm)	φd1 (mm)	φd2 (mm)
0.25 (24)	AI 0.25-8YE	12.5	8	0.8	2.0
0.34 (22)	AI 0.34-8TQ	12.5	8	0.8	2.0
0.5 (20)	AI 0.5-8WH, AI 0.5-8OG	14	8	1.1	2.5

◆ Wiring the Control Circuit Terminal

⚠ WARNING Electrical Shock Hazard

Do not remove covers or touch circuit boards while the drive is energized.
If you touch the internal components of an energized drive, it can cause serious injury or death.

NOTICE

Do not let wire shields touch other signal lines or equipment. Insulate the wire shields with electrical tape or shrink tubing.
If you do not insulate the wire shields, it can cause a short circuit and damage the drive.

Note:

- Isolate control circuit wiring from main circuit wiring (terminals R/L1, S/L2, T/L3, B1, B2, U/T1, V/T2, W/T3, -, +1, +2, +3) and other high-power wiring. If control circuit wiring is adjacent to main circuit wiring, it can cause incorrect operation of the drive and equipment from electrical interference.
- Isolate wiring for contact output terminals MA, MB, MC and M1-M6 from other control circuit wiring. If contact output terminal wiring is adjacent to other control circuit wiring, it can cause incorrect operation of the drive and equipment from electrical interference.
- Use a Class 2 power supply to connect external power to the control terminals. If the power supply for peripheral devices is incorrect, it can cause a decrease in drive performance.
- Connect the shield of shielded cable to the applicable ground terminal. Incorrect equipment grounding can cause drive or equipment malfunction from electrical interference.

Correctly ground the drive terminals and complete main circuit wiring before you wire the control circuit. Remove the keypad and front cover.

1. Push in on the tabs on the both sides of the LED status ring board to release the board from the bracket. Pull the board forward to remove it.

NOTICE

When you remove the LED Status Board from the drive bracket, make sure that you temporarily install it in the holding position provided on the drive.
If you cause damage to the LED status ring board, the LEDs will not function correctly.

Note:
You can temporarily store the LED status ring board with the temporary placement holes on the drive. The location of the temporary placement holes is different on different drive models.

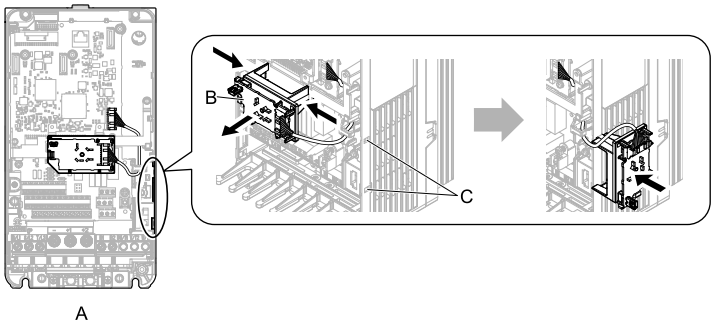

A - Drive front **C - Temporary placement holes**
B - LED status ring board

Figure 3.41 Remove the LED Status Ring Board

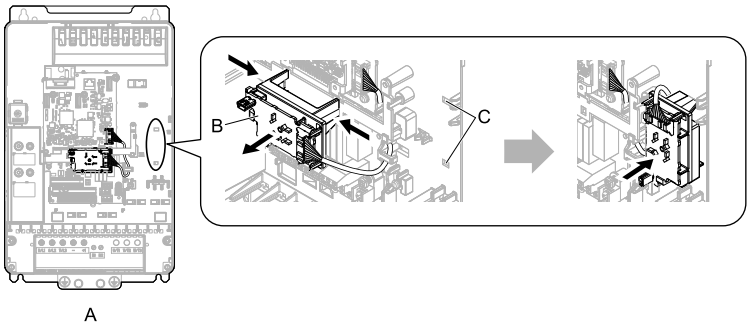

A - Drive front **C - Temporary placement holes**
B - LED status ring board

Figure 3.42 Remove the LED Status Ring Board

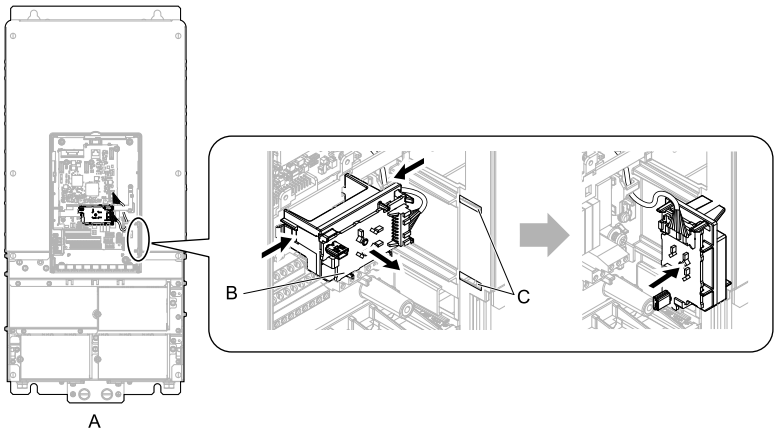

A - Drive front **C - Temporary placement holes**
B - LED status ring board

Figure 3.43 Remove the LED Status Ring Board

2. Refer to the figure and wire the control circuit.

⚠ WARNING Fire Hazard
Tighten all terminal screws to the correct tightening torque.
Connections that are too loose or too tight can cause incorrect operation and damage to the drive.
Incorrect connections can also cause death or serious injury from fire.

Note:
- Use shielded, twisted-pair wires and ground the shield to the ground terminal of the drive. Incorrect equipment grounding can cause drive or equipment malfunction from electrical interference.
- Do not use control circuit wiring that is longer than 50 m (164 ft) to supply the analog frequency reference from a remote source. If the control circuit wiring is too long, it can cause unsatisfactory system performance.

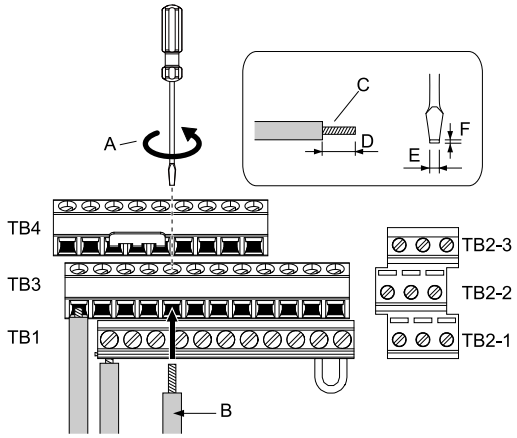

A - Loosen the screws and put the wire into the opening on the terminal block.
B - Wire with a crimp ferrule attached, or unsoldered wire with the core wires lightly twisted.
C - Pull back the shielding and lightly twist the end with your fingers to keep the ends from fraying.
D - When you do not use crimp ferrules, remove approximately 5.5 mm (0.21 in) of the covering at the end of the wire.
E - Blade width of 2.5 mm (0.1 in) or less
F - Blade thickness of 0.4 mm (0.01 in) or less

Figure 3.44 Wiring Procedure for the Control Circuit

Note:
- Do not solder the core wire. Soldered wiring connections can become loose and cause the drive to malfunction.
- Tighten all terminal screws to the correct tightening torque. Connections that are too loose or too tight can cause incorrect operation and damage to the drive. Incorrect connections can also cause death or serious injury from fire.
- Refer to Figure 3.45 for information to prepare terminal ends of the shielded wire.
- Prepare the wire ends of shielded twisted-pair wires as shown in Figure 3.45 to use an analog reference from an external frequency setting potentiometer to set the frequency. Connect the shield to terminal E (G) of the drive.

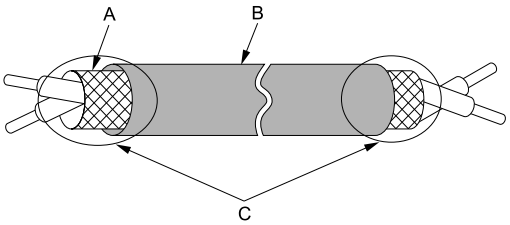

A - Connect the shield to terminal E (G) of the drive.
B - Sheath
C - Insulate with electrical tape or shrink tubing.

Figure 3.45 Prepare the Ends of Shielded Wire

3. Put the cable through the clearance in the wiring cover.

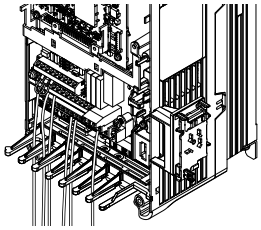

Figure 3.46 Control Circuit Wiring

4. Install the LED status ring board, front cover, and the keypad to their initial positions.

◆ Switches on the Terminal Board

The terminal board has switches to adapt the drive I/Os to the external control signals as shown in Figure 3.47. Set the switches to select the functions for each terminal.

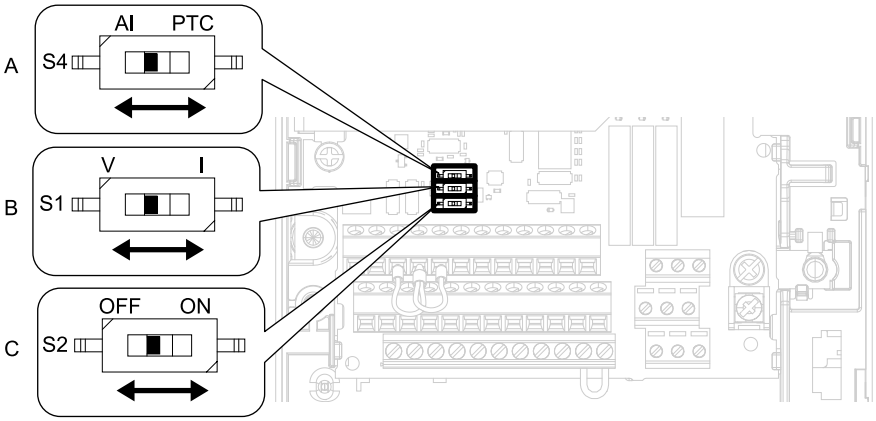

Figure 3.47 Locations of Switches

Table 3.13 I/O Terminals and Switches Functions

Position	Switch	Terminal	Function	Default
A	DIP switch S4	A3	Sets MFAI or PTC input.	AI (analog input)
B	DIP switch S1	A2	Sets the input signal type (voltage/current).	V (voltage input)
C	DIP switch S2	-	Enables and disables the MEMOBUS/Modbus communications termination resistor.	OFF

3.6 Control I/O Connections

This section gives information about the settings for the listed control circuit I/O signals.

- MFDI (terminals S1 to S10)
- MFAI (terminals A1 to A3)
- PTC input (terminal A3)
- MFAO (terminals FM, AM)
- MEMOBUS/Modbus communications (terminals D+, D-, AC)

◆ Set Sinking Mode/Sourcing Mode

Close the circuit between terminals SC-SP and SC-SN to set the sinking mode/sourcing mode and the internal/external power supply for the MFDI terminals. The default setting for the drive is internal power supply sinking mode.

NOTICE **Damage to Equipment**

Do not close the circuit between terminals SP-SN.
If you close the circuits between terminals SC-SP and terminals SC-SN at the same time, it will cause damage to the drive.

Mode	Internal Power Supply (Terminal SN-SP)	External 24 V Power Supply
Sinking Mode (NPN)	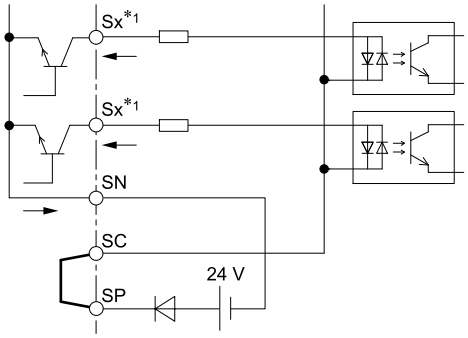	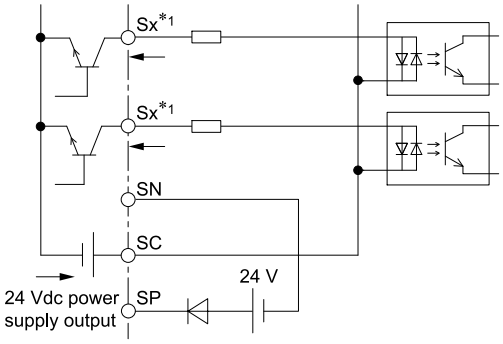
Sourcing Mode (PNP)	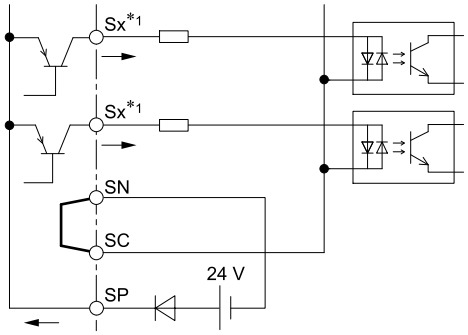	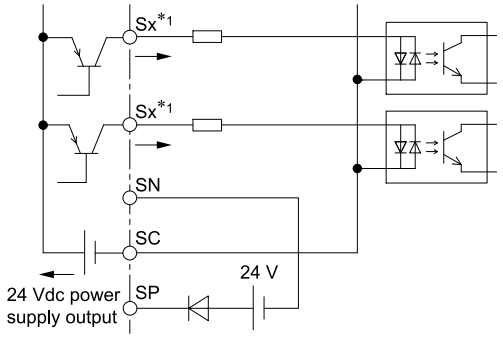

*1 The terminal Sx is one of the MFDI terminals S1 to S10.

◆ Set Input Signals for MFAI Terminals A1 to A3

Use terminals A1 and A3 to input a voltage signal, and use terminal A2 to input a voltage or a current signal. Set the signal type as shown in Table 3.14.

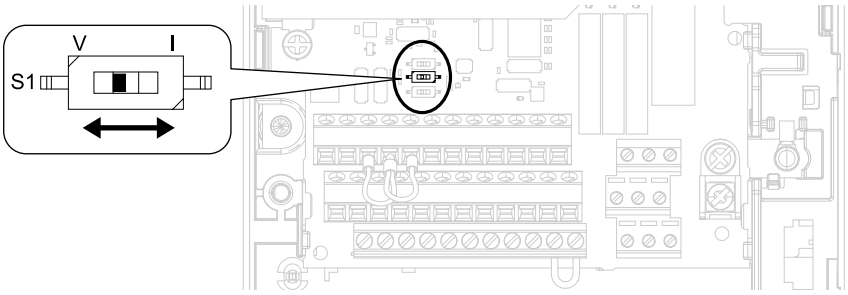

Figure 3.48 Location of DIP Switch S1

Table 3.14 MFAI Terminals A1 to A3 Signal Settings

Terminal	Input Signal	DIP Switch Settings		Parameter	
		Switch	Setting	No.	Signal Level
A1	Voltage input	-	-	H3-01	0: 0 V to 10 V/0% to 100% (input impedance: 20 kΩ) 1: -10 V to +10 V/-100% to 100% (input impedance: 20 kΩ)
A2	Voltage input	S1	V (Default)	H3-09	0: 0 V to 10 V/0% to 100% (input impedance: 20 kΩ) 1: -10 V to +10 V/-100% to 100% (input impedance: 20 kΩ)
	Current input		I		2: 4 mA to 20 mA/0% to 100% (input impedance: 250 Ω) 3: 0 mA to 20 mA/0% to 100% (input impedance: 250 Ω)
A3	Voltage input	S4	AI (Default)	H3-05	0: 0 V to 10 V/0% to 100% (input impedance: 20 kΩ) 1: -10 V to +10 V/-100% to 100% (input impedance: 20 kΩ)

Note:
- Set *H3-02, H3-10 = 0 [Terminal A1 Function Selection, Terminal A2 Function Selection = Speed Reference]* to set A1 and A2 to speed reference. The drive will add the analog input values together to make the speed reference.
- Use tweezers or a jig with a tip width of approximately 0.8 mm (0.03 in) to set DIP switches.
- Set DIP switch S4 to "AI" to use terminal A3 as a voltage input terminal. The default setting for DIP switch S4 is "AI".

◆ Set MFAI Terminal A3 to PTC Input

Set terminal A3 as an MFAI or as the PTC input for motor overload protection.
Use DIP switch S4 to set the input function.

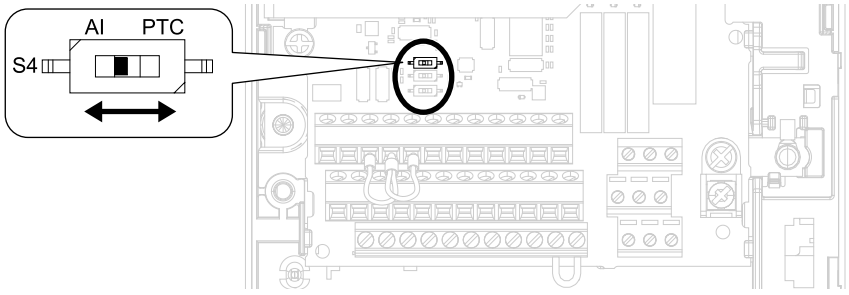

Figure 3.49 Location of DIP Switch S4

Terminal	DIP Switch S4	Description
A3	AI (Default)	Functions as an MFAI terminal. Set *H3-06 [Terminal A3 Function Selection]* to set the input function. Set the signal level with *H3-05 [Terminal A3 Signal Level Select]*: • 0: 0 V to 10 V/100% (input impedance: 20 kΩ) • 1: -10 V to +10 V/-100% to +100% (input impedance: 20 kΩ)
	PTC	Functions as the PTC input terminal. Set *H3-06 = E [Motor Temperature (PTC Input)]*. Set *H3-05 = 0 [0 to 10 V]*.

◆ Set Output Signals for MFAO Terminals FM, AM

Use *H4-07, H4-08 [Terminal FM Signal Level Select, Terminal AM Signal Level Select]* to set the signal level for the voltage output of terminals FM and AM.

Terminal	Types of Output Signals	Parameter	
		No.	Signal Level
FM	Voltage output	H4-07	0: 0 V to 10 V (default) 1: -10 V to +10 V
AM	Voltage output	H4-08	0: 0 V to 10 V (default) 1: -10 V to +10 V

◆ Switch ON Termination Resistor for MEMOBUS/Modbus Communications

When the drive is the last slave in a MEMOBUS/Modbus communications, set DIP switch S2 to the ON position. This drive has a built-in termination resistor for the RS-485 interface.

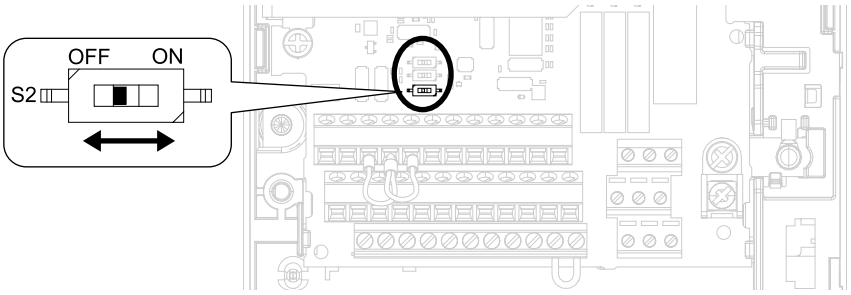

Figure 3.50 Location of DIP Switch S2

Table 3.15 MEMOBUS/Modbus Communications Termination Resistor Setting

DIP Switch S2	Description
ON	The built-in termination resistor is ON.
OFF (Default)	The built-in termination resistor is OFF.

3.7 Connect the Drive to a PC

The drive has a mini-B type USB port.

You can use a USB cable (USB 2.0, type: A - mini-B) to connect the drive to a type-A USB port on a PC. After you connect the drive to the PC, you can use Yaskawa DriveWizard software to monitor drive performance and manage parameter settings.

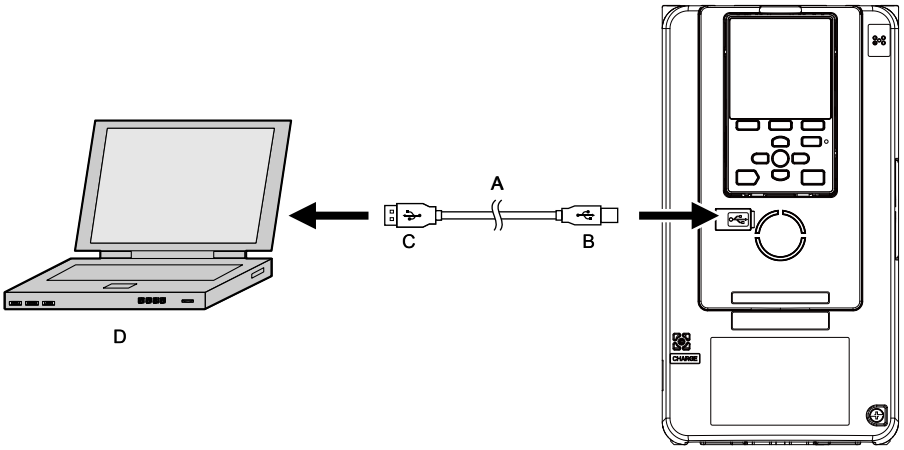

A - USB 2.0, type A - mini-B cable
B - Mini-B type connector
C - Type-A connector
D - PC

Figure 3.51 Connect to a PC (USB)

Yaskawa recommends that you use a USB cable with connectors connected with shielded wires.

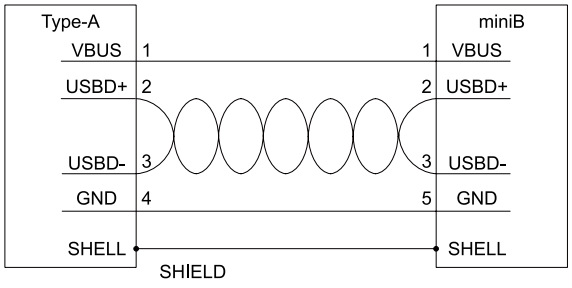

Figure 3.52 Recommended USB Cable

3.8 Braking Resistor Installation

A braking resistor or braking resistor unit (dynamic braking option) helps stop the motor quickly and smoothly when there is high load inertia. If you try to decelerate a motor in less time than usual for a coast to stop, the motor will rotate faster than the synchronous speed that aligns with the set frequency. This will cause the motor to become an induction generator. The inertia energy of the motor and regenerate to the drive and charge the drive DC bus capacitor and increase the voltage. If the voltage is more than the overvoltage level, it will trigger *ov [Overvoltage]*. To prevent these overvoltage faults, a dynamic braking option is necessary.

NOTICE **Damage to Equipment**

Before you connect a dynamic braking option to the drive, make sure that qualified personnel read and obey the Braking Unit and Braking Resistor Unit Installation Manual (TOBPC72060001). If you do not read and obey the manual or if personnel are not qualified, it can cause damage to the drive and braking circuit.

Note:

Select the correct braking circuit size to dissipate the power that is necessary to decelerate the load in the correct time. Before you run the drive, make sure that the braking circuit can dissipate the energy for the set deceleration time.

⚠ WARNING **Fire Hazard**

Do not connect a braking resistor to terminals +1 or -. Use terminals B1 and B2 for the braking resistor connections.
If you connect a braking resistor to the incorrect terminals, it can cause damage to the drive and braking circuit and serious injury or death.

NOTICE

Connect braking resistors to the drive as shown in the connection diagram examples.
If you wire the braking circuits incorrectly, it can cause damage to the drive or equipment.

To use a braking resistor, connect a thermal overload relay between the drive and the braking resistor, and set a circuit to de-energize the drive at the trip contacts of the thermal overload relay.

◆ Install a Braking Resistor Unit: LKEB-Type

Connect the braking resistor unit as shown in Figure 3.53.

Models 2022 to 2144 and 4012 to 4188 have a built-in braking transistor.

To prevent overheating the braking resistor unit, set a sequence to de-energize the drive at the trip contacts of the thermal overload relay.

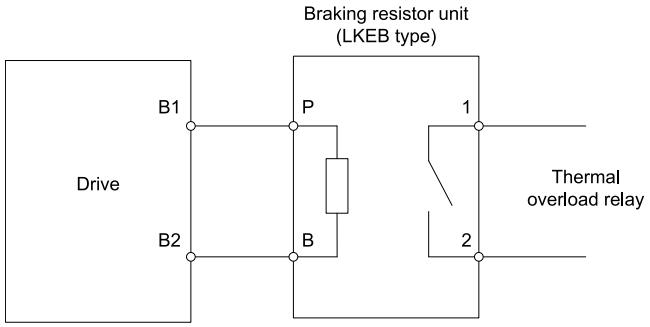

Figure 3.53 Install a Braking Resistor Unit: LKEB-Type

◆ Install a Braking Unit: CDBR-Type

To install a CDBR-type braking unit, connect terminal +3 on the drive to terminal + on the braking unit, and connect terminal - on the drive to terminal - on the braking unit. Terminal +2 on the drive is not necessary for CDBR-type braking unit connections.

Set *L8-55 = 0 [Internal DB TransistorProtection = RF Disabled/BOL Disabled]*.

Note:
- To install a CDBR-type braking unit to the drive models 2022 to 2144 and 4012 to 4188 that have a built-in braking transistor, connect drive terminal B1 to terminal + on the braking unit.
- A junction terminal is necessary to connect a braking unit (CDBR-series) to drive models 2181, 2225, 4140, or 4188. To wire the braking unit, install a junction terminal that can connect to wires in the range specified for the drive, peripheral devices, and options. This table shows recommended junction terminals. Contact Yaskawa or your nearest sales representative for more information about selection and installation of the junction terminal.

Drive Model	Junction Terminal Model Manufacturer: Mibu Denki Industrial Co., Ltd.
2181, 4140, 4188	DTK-200N × 2P *1
2225	DTK-300N × 2P *1

*1 The junction terminal must have two or more poles.

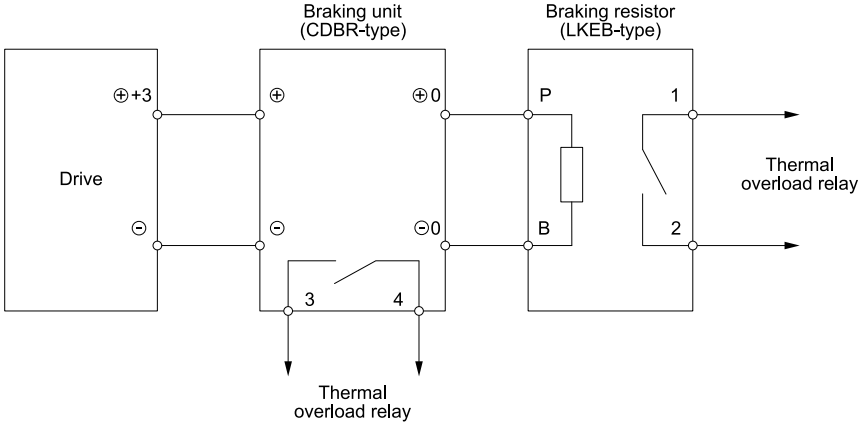

Figure 3.54 Install a Braking Unit: CDBR-Type/Braking Resistor Unit: LKEB-Type

■ Braking Unit Connection Wire Gauge (CDBR-Type)

To comply with IP20 when you connect the braking unit (CDBR-type) to drive models 2269 to 2519 or 4225 to 4380, refer to Table 3.16 and Table 3.17 to select the wires.

Table 3.16 200 V Class

Drive Model	Braking Unit (Qty)	Drive Terminals	Recomm. Gauge (mm²)	Applicable Gauge (mm²)	Ref.
2269	CDBR-2022D (× 2) Specified Wire Gauge	+3	6 × 2P	6 - 10 × 2P	Figure 3.55
		-	6 × 2P	6 - 10 × 2P	Figure 3.55
	Applicable Gauge *1	+3	35 × 2P	25 - 70 × 2P	Figure 3.56
		-	35 × 2P *2	25 - 70 × 2P *2	Figure 3.56
2354	CDBR-2110D (× 1) Specified Wire Gauge	+3	35	35	Figure 3.55
		-	35	35	Figure 3.55
	Applicable Gauge *1	+3	50 × 2P	25 - 70 × 2P	Figure 3.56
		-	50 × 2P *2	25 - 70 × 2P *2	Figure 3.56
2432	CDBR-2110D (× 1) Specified Wire Gauge	+3	35	35	Figure 3.57
		-	35	35	Figure 3.57
2519	CDBR-2110D (× 1) Specified Wire Gauge	+3	35	35	Figure 3.57
		-	35	35	Figure 3.57

*1 This is the applicable wire gauge when you use a braking unit that is not a Yaskawa braking unit (CDBR-type).
*2 This is the applicable wire gauge when you use the same wires for terminals - and +3.

Table 3.17 400 V Class

Drive Model	Braking Unit (Qty)	Drive Terminals	Recomm. Gauge (mm^2)	Applicable Gauge (mm^2)	Ref.
4225	CDBR-4045D (× 2) Specified Wire Gauge	+3	6 × 2P	6 - 10 × 2P	Figure 3.55
		-	6 × 2P	6 - 10 × 2P	Figure 3.55
	Applicable Gauge *1	+3	70 × 2P	25 - 70 × 2P	Figure 3.56
		-	70 × 2P *2	25 - 70 × 2P *2	Figure 3.56
4270	CDBR-4220D (× 1) Specified Wire Gauge	+3	35	35	Figure 3.55
		-	35	35	Figure 3.55
	Applicable Gauge *1	+3	70 × 2P	25 - 70 × 2P	Figure 3.56
		-	70 × 2P *2	25 - 70 × 2P *2	Figure 3.56
4325	CDBR-4220D (× 1) Specified Wire Gauge	+3	35	35	Figure 3.55
		-	35	35	Figure 3.55
	Applicable Gauge *1	+3	70 × 2P	25 - 70 × 2P	Figure 3.56
		-	70 × 2P *2	25 - 70 × 2P *2	Figure 3.56
4380	CDBR-4220D (× 1) Specified Wire Gauge	+3	35	35	Figure 3.57
		-	35	35	Figure 3.57

*1 This is the applicable wire gauge when you use a braking unit that is not a Yaskawa braking unit (CDBR-type).
*2 This is the applicable wire gauge when you use the same wires for terminals - and +3.

Cutaway Section of the Wiring Cover

Examine the terminal symbols on the braking unit and use a diagonal-cutting pliers to clip the cutaway section of the corresponding wiring cover.

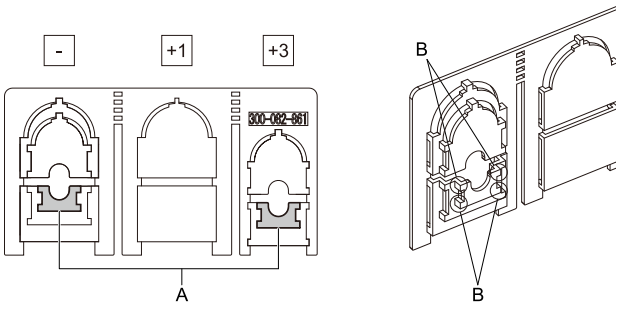

A - Cutaway sections

B - Use a diagonal-cutting pliers to clip this area.

Figure 3.55 Cutaway Sections

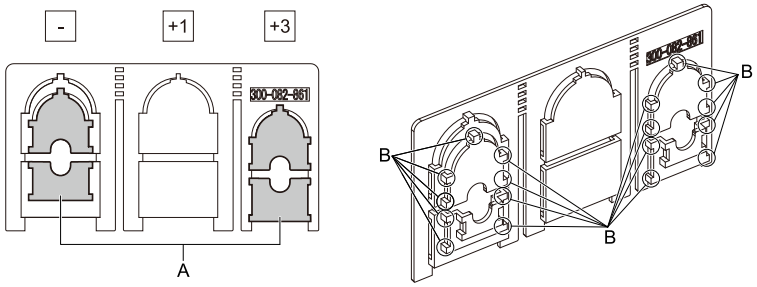

A - Cutaway sections

B - Use a diagonal-cutting pliers to clip this area.

Figure 3.56 Cutaway Sections

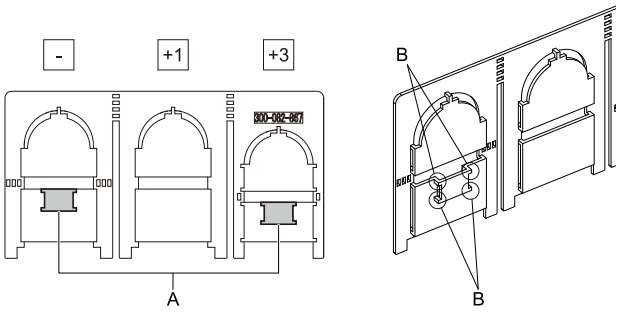

A - Cutaway sections **B - Use a diagonal-cutting pliers to clip this area.**

Figure 3.57 Cutaway Sections

■ Connect a Braking Unit (CDBR-Type)

Remove the terminal cover before you connect the braking unit (CDBR-type) to the drive.

1. Remove the screws on the terminal block cover and pull the terminal block cover away from the terminal block. Pull the wiring cover away from the drive to remove the wiring cover after removing the terminal block cover.

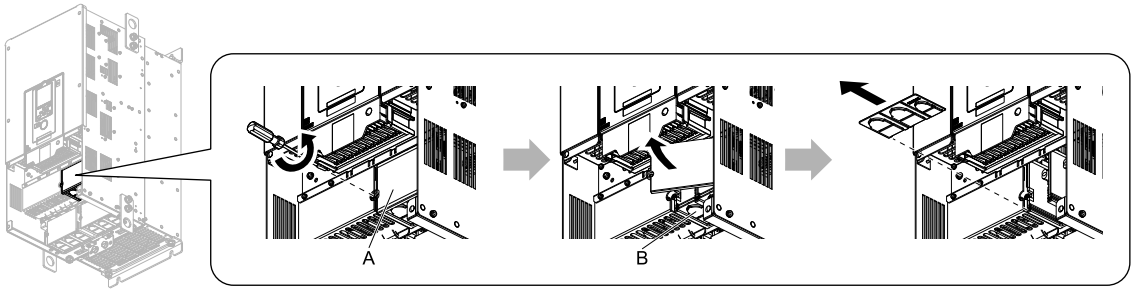

A - Terminal block cover **B - Wiring cover**

Figure 3.58 Remove the Wiring Cover

2. Examine the signal from the wired terminal and use a diagonal-cutting pliers to remove areas of the wiring cover cutaway section.
   Refer to *Cutaway Section of the Wiring Cover on page 98* for more information.

Note:
- Different drive models have different wiring covers.
- Only clip the section of the wiring cover that applies to the wired terminal. If you clip areas that do not apply to wired terminals, the protective enclosure will not keep its IP20 protective level.
- Make sure that you hold the cutaway section tightly when you remove pieces of the cutaway section. Pieces of the cutaway section can fly out and cause injury.
- Make sure that the clipped section does not cause damage to the wires.
- If you use wires that are not specified by Yaskawa, the protective enclosure could lose its IP20 protective level, although the wiring cover is correct. Contact Yaskawa or your nearest sales representative for more information.
- When you use the recommended gauge for the electrical wires, it is not necessary to attach the wiring cover of the main circuit power input terminal and the drive output terminal. If you use the applicable gauge for the electrical wires, you must attach the wiring cover.

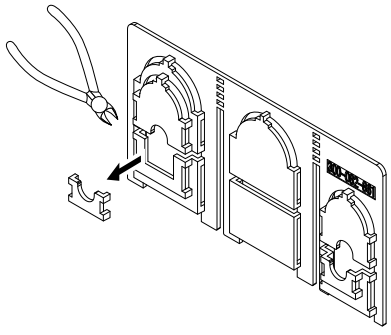

Figure 3.59 Clip the Cutaway Section of the Wiring Cover

3. Put the wires through the holes that you cut out of the wiring cover.

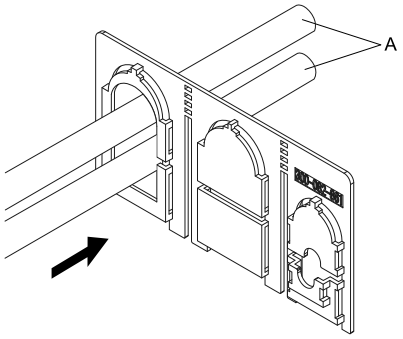

A - Wire

Figure 3.60 Lead the Wire through the Wiring Cover

4. Crimp the closed-loop crimp terminal to the wire.
5. Remove the main circuit terminal block nut.

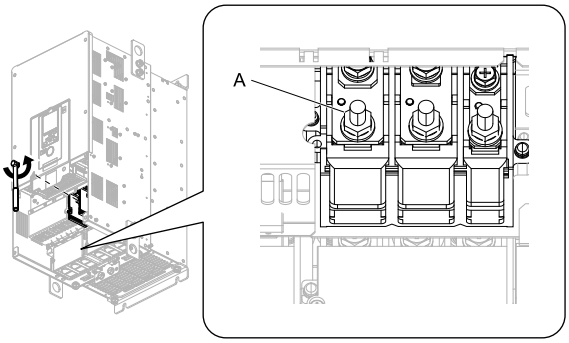

A - Nut

Figure 3.61 Remove the Terminal Block Nut

6. Wire the closed-loop crimp terminal to the main circuit terminal block.

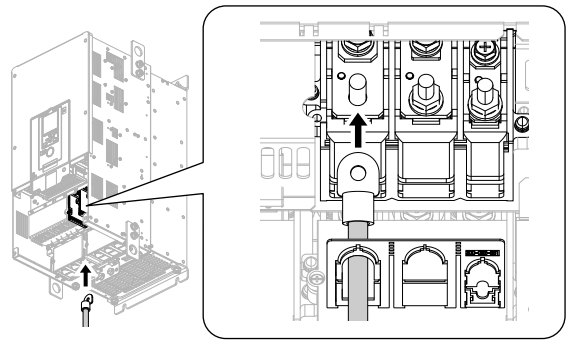

Figure 3.62 Connect the Wire

7. Tighten the nut to the specified torque.

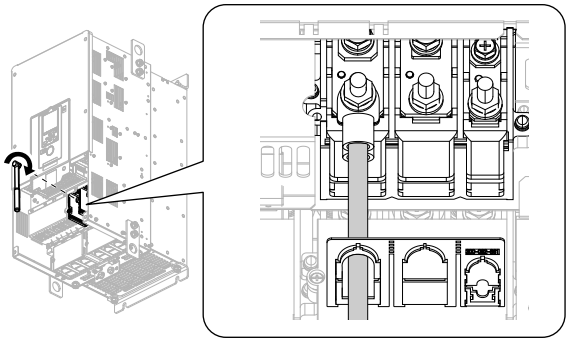

Figure 3.63 Tighten the Terminal Block Nut

8. Attach the wiring cover and terminal block cover to their initial positions and tighten the screws on the terminal block cover.

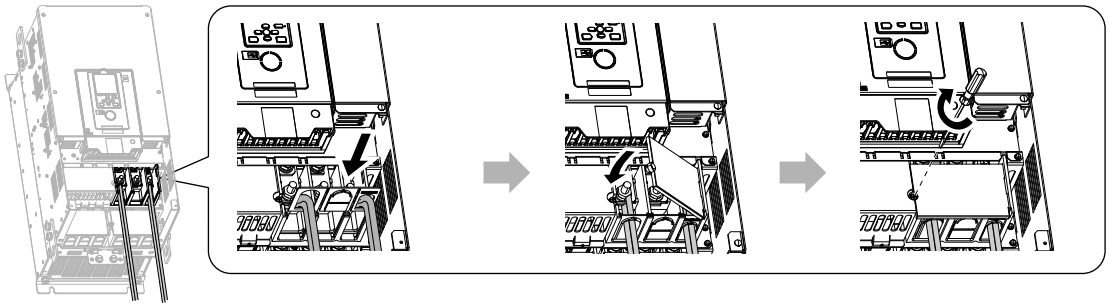

Figure 3.64 Reattach the Wiring Cover

9. Put the terminal cover back in its initial position.

◆ Connect Braking Units in Parallel

To connect two or more braking units in parallel, refer to Figure 3.65 for wiring and connector selections.

Braking units have connectors to select master or slave. On the first braking unit, select the master side. On the second unit and all subsequent units, select the slave side.

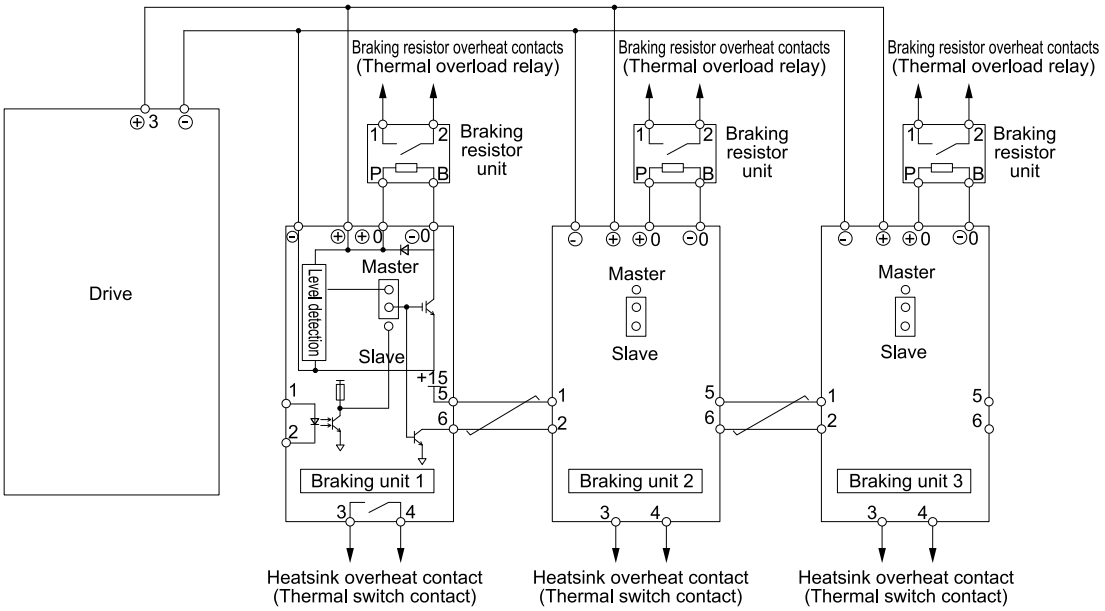

Figure 3.65 Connect Braking Units in Parallel

◆ Dynamic Braking Option Overload Protection

To prevent overheating the dynamic braking option, set a sequence to de-energize the drive at the trip contacts of the thermal overload relay.

⚠ WARNING Fire Hazard

When you use a braking unit, use a thermal relay on the braking resistors and set a fault contact output for the braking resistor unit to disconnect drive main power through an input contactor. Incorrect braking circuit protection can cause the resistors to become too hot and cause serious injury or death.

3.9 Drive Wiring Protection

◆ Installing an Earth Leakage Circuit Breaker (ELCB)

When the drive output switches at high speeds, it causes high frequency leakage current. To prevent electrical shock and fires caused by ground fault protection that is not sufficient, install an ELCB.

Use a high frequency ELCB at the power input side of the drive and make sure that each drive has a minimum cumulative sensitivity amperage of 30 mA. The specialized breaker only detects the leakage current from frequency bands that are dangerous to humans.

If a device does not have protection against high frequencies, high frequency leakage currents can cause the device to malfunction. If you have a malfunction on a device that does not have protection, decrease the carrier frequency of the drive, install a better breaker, or use an ELCB with a minimum cumulative sensitivity amperage of 200 mA for each drive.

These conditions can have an effect on leakage current:

- Drive capacity
- Carrier frequency
- Wiring distance and types of motor cables
- EMI/RFI filter

To prevent damage and injury to personnel and drives, use a high-frequency ELCB that is rated for AC and DC power supplies.

Note:

Yaskawa recommends these ELCBs, which are designed to operate with high frequencies:
- Mitsubishi Electric Corporation, NV series
- Schneider Electric, NS series

You can use a molded-case circuit breaker (MCCB) as a replacement for an ELCB that is upstream in the power supply system.

◆ Installing a Molded-Case Circuit Breaker (MCCB) or Earth Leakage Circuit Breaker (ELCB)

Install a molded-case circuit breaker (MCCB) or an earth leakage circuit breaker (ELCB) for line protection between the power supply and main circuit power supply input terminals R/L1, S/L2, and T/L3. The MCCB or ELCB gives overload protection and also prevent damage to the main circuit and the devices that are wired to the main circuit.

Use the information in this section to select the correct MCCB or ELCB and to safely connect the device.

- The capacity of the MCCB or ELCB must be 1.5 to 2 times the continuous rated output current of the drive. Select an MCCB or ELCB that has an operating time characteristic longer than the operating time characteristic of the drive for overheat protection (one minute at 150% of the continuous rated output current).
- When you connect more than one drive or the drive and other device to an MCCB or ELCB, refer to Figure 3.66, use a magnetic contactor (MC), and set a sequence that de-energizes the drive when it outputs errors.

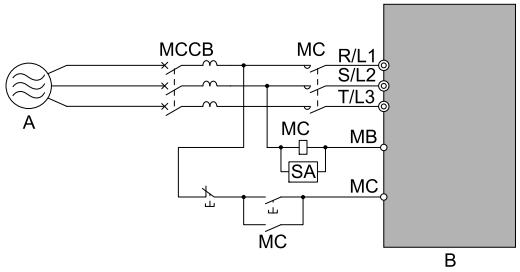

A - Power supply **B - Drive**

Figure 3.66 Connect an MCCB

⚠ WARNING Electrical Shock Hazard

Use an MCCB, ELCB, or Magnetic Contactor (MC) to de-energize the drive before you wire the main circuit terminal.

If the main circuit terminal is energized during wiring, it will cause serious injury or death.

3.10 Dynamic Braking Option, Motor Protection

◆ Installing an Electromagnetic Contactor (MC) at the Input Side of the Drive

You can use an MC as an alternative to a molded case circuit breaker (MCCB) when:

- The protective functions of the drive have been triggered
- An emergency stop occurred, and the sequence de-energizes the drive.

If an MC on the input side of the drive (primary side) stops the drive, regenerative braking will not operate, and the drive will coast to stop.

NOTICE

When you connect electromagnetic switches or magnetic contactors to the output motor circuits, make sure that you sequence them correctly.
If the output motor circuit sequence is incorrect, it can cause damage to the drive.

NOTICE **Damage to Equipment**

Do not energize and de-energize the drive more frequently than one time each 5 minutes (48 times/day maximum).
If you frequently energize and de-energize the drive, it can cause drive failure.

Note:

- When machinery must not restart after recovery from a momentary power loss that occurred during run, install an MC at the input side of the drive and set a sequence that does not automatically set the Run command to ON after recovery of power.
- When it is necessary to stop momentary power loss, for example to maintain a circuit that has momentary power loss, use a delayed-release MC.
- Use an MC (magnetic contactor) to make sure that you can fully remove power to the drive when necessary. Wire the MC to open when a fault output terminal is triggered.

■ Protect the Braking Resistor/Braking Resistor Unit

Use an MC on the input side (primary side) to prevent damage to the braking resistor/braking resistor unit.

⚠ WARNING **Fire Hazard**

When you use a braking unit, use a thermal relay on the braking resistors and set a fault contact output for the braking resistor unit to disconnect drive main power through an input contactor. Incorrect braking circuit protection can cause the resistors to become too hot and cause serious injury or death.

◆ Installing a Thermal Overload Relay on the Drive Output

A thermal overload relay disconnects the power line to the motor during a motor overload condition to prevent damage to the motor.

Install a thermal overload relay between the drive and motor in these conditions:

- When you operate more than one motor with one drive
- When you operate the motor directly from the power line with a power line bypass

When you operate one motor with one drive, it is not necessary to install a thermal overload relay. The drive has electronic motor overload protection in the drive software.

Note:

- When you install a thermal overload relay, set parameter *L1-01 = 0 [Motor Overload (oL1) Protection = Disabled]*.
- Set up a sequence that will trip an external fault (coast to stop) for the contacts of the thermal overload relay.

■ General Precautions When Using Thermal Overload Relays

When you use a motor thermal overload relay on the drive output to prevent nuisance trips and overheating of the motor at low speeds, be sure to think about these application precautions:

- Operation of a low speed motor
- When you operate more than one motor with one drive
- Length of the motor cables
- Nuisance tripping because of high drive carrier frequency

Operation of a Low Speed Motor

Usually, you use thermal overload relays on general-purpose motors (standard motors). When a drive operates a general-purpose motor, the motor current is approximately 5% to 10% more than with a commercial power supply. When a motor with a shaft-driven fan operates at low speeds, the cooling capacity decreases. This can cause the motor to overheat when the load current is in the motor rated value. Enable the electronic thermal protection in the drive when possible to prevent this problem.

The electronic thermal overload function uses the relation between the speed and heat characteristics in the variable speed control range to simulate the cooling ability of general-purpose motors and forced-vented motors to prevent damage to the motor.

When You Operate More than One Motor with One Drive

To disable the overload protection function of the electronic thermal protector of the drive, set *L1-01 = 0 [Motor Overload (oL1) Protection = Disabled]*.

Note:

If you operate more than one motor from one drive, you cannot use the electronic thermal protection of the drive.

Length of the Motor Cables

If you use long motor cables with a high carrier frequency, the increased leakage current can cause nuisance tripping of the thermal relay. To prevent this, decrease the carrier frequency or increase the tripping level of the thermal overload relay.

Nuisance Tripping Because of High Drive Carrier Frequency

High carrier frequency PWM drives make current waveforms that can increase the temperature in overload relays. It may be necessary to increase the trip level setting when encountering nuisance triggering of the relay.

⚠ WARNING Fire Hazard

Before you increase the detection level of the thermal relay, make sure that a secondary problem is not the cause of the overload. Make sure that you know the local codes for electrical wiring, then adjust the electrothermal settings.
Incorrect thermal relay adjustment and incorrect wiring can cause serious injury or death.

3.11 Improve the Power Factor

◆ Connect an AC Reactor or a DC Reactor

AC reactors and DC reactors decrease surges in current and improve the power factor on the input side of the drive.

Connect an AC reactor or a DC reactor to the input side (primary side) in these conditions:

- To decrease harmonic current or improve the power factor of the power supply
- When there is switching of phase advancing capacitor
- With a large capacity power supply transformer (600 kVA or more).

Note:

- You can use an AC reactor and DC reactor together.
- When you connect a thyristor converter (for example, a DC drive) to the same power supply system, use an AC reactor.
- Ground the AC and DC reactors (option) on the back of the mounting base. Remove all paint from the mounting surface of the control panel.

■ Connect an AC Reactor

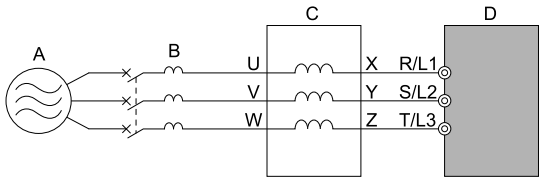

A - Power supply
B - MCCB
C - AC reactor
D - Drive

Figure 3.67 AC Reactor Connection Example

■ Connect a DC Reactor

When you install a DC reactor, remove the jumper between terminals +1 and +2. If you will not use a DC rector, do not remove the jumper. Refer to Figure 3.68 for an example of how to wire the DC reactor.

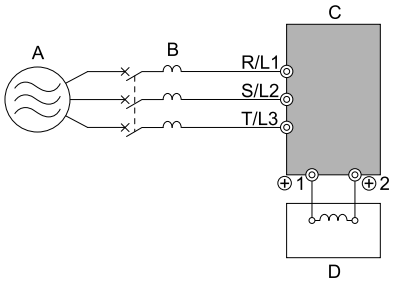

A - Power supply
B - MCCB
C - Drive
D - DC reactor

Figure 3.68 DC Reactor Connection Example

3.12 Prevent Switching Surge

◆ Connect a Surge Protective Device

A surge protective device decreases the surge voltage generated when you switch an inductive load near the drive. Inductive loads include:

- Magnetic contactors
- Electromagnetic relays
- Magnetic valves
- Solenoids
- Magnetic brakes.

Always use a surge protective device or diode with inductive loads.

Note:
Do not connect a surge protective device to the drive output side.

3.13 Decrease Noise

◆ Connect a Noise Filter to the Input Side (Primary Side)

High-speed switching makes noise in the drive output. This noise flows from the drive to the power supply, and can possibly have an effect on other equipment. Install a noise filter to the input side of the drive to decrease the quantity of noise that flows to the power supply. A noise filter also prevents noise from entering the drive from the power supply.

- Use a noise filter specially designed for drives.
- Install the noise filter as close as possible to the drive.

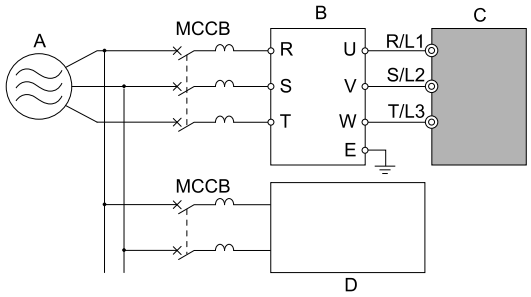

A - Power supply
B - Input side (primary side) noise filter
C - Drive
D - Other controller

Note:
The input side (primary side) noise filter model is LNFD-xx.

Figure 3.69 Example of Connecting the Noise Filter on the Input Side (Primary Side)

◆ Connect a Noise Filter to the Output Side (Secondary Side)

A noise filter on the output side of the drive decreases inductive noise and radio frequency interference.
Figure 3.70 shows an example of noise filter wiring.

NOTICE
Do not connect phase-advancing capacitors, LC/RC noise filters, or leakage breakers (ELCB) to the motor circuit.
If you connect these devices to the output circuits, it can cause damage to the drive and connected equipment.

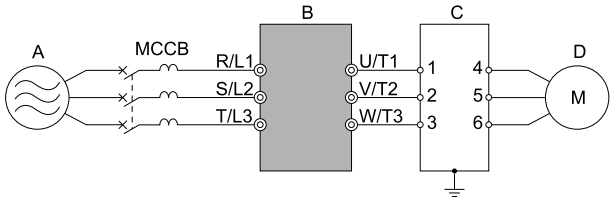

A - Power supply
B - Drive
C - Noise filter on output side (secondary side)
D - Motor

Figure 3.70 Example of Connecting the Noise Filter on the Output Side (Secondary Side)

Note:
Glossary
- Radio frequency interference:
  Electromagnetic waves radiated from the drive and cables make noise through the full radio bandwidth that can have an effect on nearby devices.
- Inductive noise:
  The noise from electromagnetic induction can have an effect on the signal line and can cause the controller to malfunction.

■ Prevent Inductive Noise

In addition to installing a noise filter, you can also run all wiring through a grounded metal conduit to decrease inductive noise occurring at the output side. Put the cables a minimum of 30 cm (11.8 in) away from the signal line to prevent induced noise. Ground the cables to metal conduits.

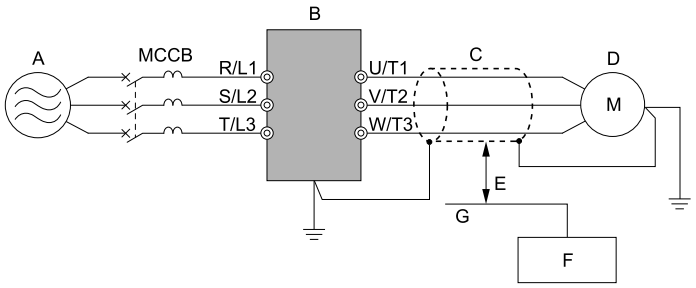

A - Power supply
B - Drive
C - Shielded motor cable
D - Motor
E - Minimum of 30 cm (11.8 in) apart
F - Controller
G - Signal line

Figure 3.71 Prevent Inductive Noise

■ Decrease Radio Frequency Interference

The drive, input lines, and output lines generate radio frequency interference. Use noise filters on input and output sides and install the drive in a steel box to decrease radio frequency interference.

Note:
Keep the cable between the drive and motor as short as possible.

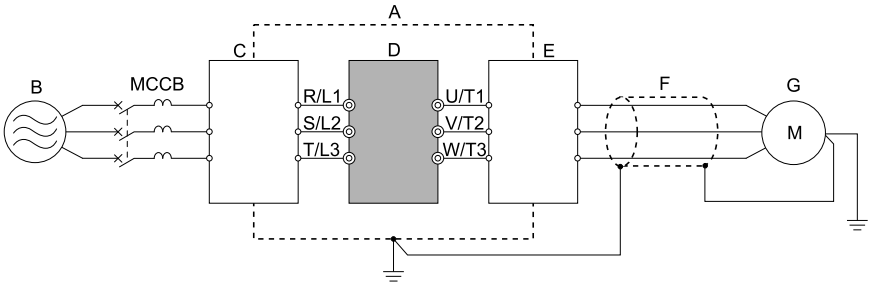

A - Steel box
B - Power supply
C - Noise filter
D - Drive
E - Noise filter
F - Shielded motor cable
G - Motor

Figure 3.72 Decrease Radio Frequency Interference

3.14 Protect the Drive during Failures

◆ Factory-Recommended Branch Circuit Protection for UL Listing

Use branch circuit protection to protect against short circuits and to maintain compliance with UL 61800-5-1. Yaskawa recommends connecting semiconductor protection fuses on the input side for branch circuit protection. Refer to Table 3.18 and Table 3.19 for more information about recommended fuses.

⚠ WARNING Electrical Shock Hazard

After the drive blows a fuse or trips an ELCB, do not immediately energize the drive or operate peripheral devices. Wait for the time specified on the warning label at a minimum and make sure that all indicators are OFF. Then check the wiring and peripheral device ratings to find the cause of the problem. If you do not know the cause of the problem, contact Yaskawa before you energize the drive or peripheral devices.
If you do not fix the problem before you operate the drive or peripheral devices, it can cause serious injury or death.

- 200 V Class
  Use the fuses specified in this document to prepare the drive for use on a circuit that supplies not more than 100,000 RMS and not more than 240 Vac when there is a short circuit in the power supply.
- 400 V Class
  Use the fuses specified in this document to prepare the drive for use on a circuit that supplies not more than 100,000 RMS and not more than 480 Vac when there is a short circuit in the power supply.

The built-in short circuit protection of the drive does not provide branch circuit protection. The user must provide branch circuit protection as specified by the National Electric Code (NEC), the Canadian Electric Code, Part I (CEC), and local codes.

■ Three-Phase 200 V Class

Table 3.18 Factory-Recommended Branch Circuit Protection: 200 V Class

Drive Model	Maximum Applicable Motor Output kW (HP)	Input Current Rating A	Semiconductor Protection Fuse Rated Current Manufacturer: EATON/Bussmann
2022	3.7 (5)	18.2	FWH-80B FWH-100B *1
2031	5.5 (7.5)	26.5	FWH-125B
2041	7.5 (10)	35.5	FWH-150B
2059	11 (15)	51.2	FWH-200B
2075	15 (20)	69	FWH-225A
2094	18.5 (25)	84.4	FWH-225A FWH-250A *1
2110	22 (30)	72	FWH-225A FWH-250A *1
2144	30 (40)	97.3	FWH-275A FWH-300A *1
2181	37 (50)	119.2	FWH-275A FWH-350A *1
2225	45 (60)	144.3	FWH-325A FWH-450A *1
2269	55 (75)	175.4	FWH-600A
2354	75 (100)	237.5	FWH-800A
2432	90 (125)	283.9	FWH-1000B
2519	110 (150)	345.6	FWH-1000B

*1 Yaskawa recommends a fuse with a large rated current for applications with repeated loads.

■ Three-Phase 400 V Class

Table 3.19 Factory-Recommended Branch Circuit Protection: 400 V Class

Drive Model	Maximum Applicable Motor Output kW (HP)	Input Current Rating A	Semiconductor Protection Fuse Rated Current Manufacturer: EATON/Bussmann
4012	3.7 (5)	10.3	FWH-60B
4019	5.5 (7.5)	13.9	FWH-80B
4023	7.5 (10)	18.7	FWH-90B
4030	11 (15)	26.9	FWH-150B
4039	15 (20)	36.3	FWH-200B
4049	18.5 (25)	44.4	FWH-200B
4056	22 (30)	37.9	FWH-225A
4075	30 (40)	51.2	FWH-250A
4094	37 (50)	62.8	FWH-275A
4114	45 (60)	75.9	FWH-275A
4140	55 (75)	92.3	FWH-300A
4188	75 (100)	125	FWH-325A FWH-400A *1
4225	90 (125)	149.4	FWH-500A
4270	110 (150)	181.9	FWH-600A
4325	132 (175)	217.5	FWH-700A
4380	160 (200)	262.7	FWH-800A

*1 Yaskawa recommends a fuse with a large rated current for applications with repeated loads.

3.15 Wiring Checklist

Wire the drive, examine these items, then do a test run.

Table 3.20 Power Supply Voltage

Checked	No.	Item to Check
	1	The power supply voltage must be in the input voltage specification range of the drive.

Table 3.21 Main Circuit Wiring

Checked	No.	Item to Check
	1	• Put the power supply through an earth leakage circuit breaker (ELCB) before it gets to the drive input. When you install an ELCB upstream in the power supply system, put the power supply through an ELCB or molded-case circuit breaker (MCCB) before it gets to the drive input. • Connect an applicable ELCB or MCCB.
	2	Correctly wire the power supply to drive terminals R/L1, S/L2, and T/L3.
	3	Correctly wire the drive and motor together. The motor lines and drive output terminals must align to make the correct phase order. **Note:** If the phase order is incorrect, the drive will rotate in the opposite direction.
	4	Use 600 V heat resistant indoor PVC wire for the power supply and motor lines. **Note:** Wire gauge recommendations assume use of 600 V class 2 heat-resistant indoor PVC wire.
	5	Use the correct wire gauges for the main circuit. **Note:** When the wiring distance between the drive and the motor is long, use this formula for the voltage drop in the wire: Motor rated voltage (V) × 0.02 ≥ √3 × wire resistance (Ω/km) × wiring distance (m) × motor rated current (A) × 10^{-3}
	6	Correctly ground the drive.
	7	Tighten the main circuit and grounding terminal screws of the drive to a correct tightening torque.
	8	When you will operate more than one motor from one drive, set up overload protection circuits. 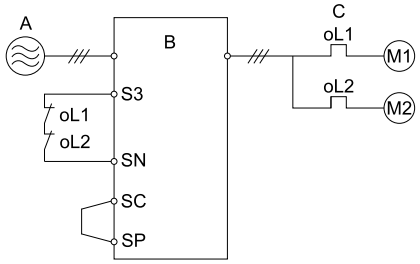 **A - Power supply** **B - Drive** **C - oL1, oL2: Thermal overload relay** **Note:** Set *H1-03 = 25 [Terminal S3 Function Selection = External Fault (NC-Always-Coast)]*.
	9	When you use a braking resistor or a braking resistor unit, install an electromagnetic contactor (MC). Correctly install the resistor and make sure that overload protection uses the MC to shut off the power supply.
	10	Make sure that you did not install phase advancing capacitors, input noise filters, ELCBs, GFCIs, or RCM/RCDs on the output side of the drive.

Table 3.22 Control Circuit Wiring

Checked	No.	Item to Check
	1	Use twisted-pair cables for all drive control circuit wiring.
	2	Ground the shields of shielded wiring to terminal E (G).
	3	Correctly install any options.
	4	Examine the drive for other wiring errors. Only use a multimeter to check wiring.
	5	Tighten the control circuit terminal screws of the drive to a correct tightening torque.
	6	Pick up all wire scraps and unnecessary screws.
	7	Make sure that the wires on the terminal block do not touch other terminals or connections.
	8	Make sure that you isolate the control circuit wiring from main circuit wiring in the control panel or in a duct.

Checked	No.	Item to Check
	9	Make sure that control circuit wiring is not longer than 50 m (164 ft).
	10	Make sure that Safe Disable input wiring is not longer than 30 m (98 ft).

3.16 Motor Application Precautions

◆ Precautions for Existing Standard Motors

■ Low-Speed Range

When a drive operates a standard motor, it will lose more power compared to operating the motor with a commercial power supply. In the low speed range, the temperature of the motor increases quickly because the motor cannot decrease its temperature when the speed decreases. In these conditions, decrease the load torque of the motor in the low-speed range. Figure 3.73 shows the permitted load characteristics for a Yaskawa standard motor. When 100% continuous torque is necessary at low speeds, use a motor designed to operate with a drive.

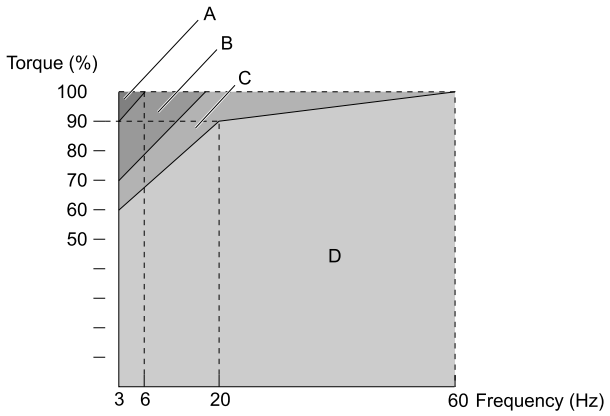

A - 25% ED (or 15 min)
B - 40% ED (or 20 min)
C - 60% ED (or 40 min)
D - Continuous operation

Figure 3.73 Permitted Load Characteristics for a Yaskawa Standard Motors

■ Insulation Withstand Voltage

Consider motor voltage tolerance levels and motor insulation in applications with an input voltage of over 440 V or particularly long wiring distances. Use an insulated drive motor.

NOTICE

Use an inverter-duty motor or vector-duty motor with reinforced insulation and windings applicable for use with an AC drive.
If the motor does not have the correct insulation, it can cause a short circuit or ground fault from insulation deterioration.

■ High-Speed Operation

If you operate a motor more than its rated speed, you can have problems with the motor bearing durability and dynamic balance of the machine. Contact the motor or machine manufacturer.

■ Torque Characteristics

When you operate a motor with a drive, the torque characteristics are different than when you operate the motor directly from line power. Make sure that you know about the load torque characteristics for your application.

■ Vibration

The drive allows selection of high carrier PWM control and low carrier PWM control in *C6-06 [PWM Modulation Method]*. Selecting high carrier PWM can help decrease motor oscillation.

Vibrations could occur in these conditions:

- Resonance with the natural frequency of machinery
  Use caution if you add a variable-speed drive to applications that operate the motor from line power at a constant speed. If there is resonance, install shock-absorbing rubber around the base of the motor.
- The motor is not balanced
  Use caution if the motor speed is more than the rated motor speed.

■ Audible Noise

The audible noise of the motor changes when the carrier frequency setting changes. When you use a high carrier frequency, audible noise from the motor is equivalent to the motor noise generated when you operate from line power. If you operate at speeds that are more than the rated rotation speed, the unwanted motor noise increases.

4

Startup Procedure and Test Run

4.1 Section Safety 116
4.2 Keypad Components and Functions 118
4.3 LED Indicator Status 124
4.4 Start-up Procedures 126
4.5 Items to Check before Starting Up the Drive 132
4.6 Keypad Operation 136
4.7 Auto-Tuning 163
4.8 Setup Procedure for Elevator Applications 169
4.9 Improve Ride Comfort 206
4.10 Test Run Checklist 209

4.1 Section Safety

⚠DANGER

Electrical Shock Hazard

Do not examine, connect, or disconnect wiring on an energized drive. Before servicing, disconnect all power to the equipment and wait for the time specified on the warning label at a minimum. The internal capacitor stays charged after the drive is de-energized. The charge indicator LED extinguishes when the DC bus voltage decreases below 50 Vdc. When all indicators are OFF, remove the covers before measuring for dangerous voltages to make sure that the drive is safe.

If you do work on the drive when it is energized, it will cause serious injury or death from electrical shock.

⚠WARNING

Electrical Shock Hazard

Do not operate the drive when covers are missing. Replace covers and shields before you operate the drive. Use the drive only as specified by the instructions.

Some figures in this section include drives without covers or safety shields to more clearly show the inside of the drive. If covers or safety shields are missing from the drive, it can cause serious injury or death.

Do not remove covers or touch circuit boards while the drive is energized.

If you touch the internal components of an energized drive, it can cause serious injury or death.

Sudden Movement Hazard

Remove all personnel and objects from the area around the drive, motor, and machine and attach covers, couplings, shaft keys, and machine loads before you energize the drive.

If personnel are too close or if there are missing parts, it can cause serious injury or death.

Sudden Equipment Movement Hazard

When you use a Safe Disable signal or Baseblock command with the drive in a lifting application, you must close the holding brake if an input terminal triggers the Safe Disable signal or Baseblock command to stop drive output. Set the holding brake and input the Safe Disable signal or Baseblock command to isolate the drive output before you make sure that the holding brake is closed.

If you do not test the holding brake before you operate the drive, it can cause death or serious injury from a sudden coasting motor or falling or slipping of the load when you input the Safe Disable signal or Baseblock command.

Sudden Movement Hazard

Make sure that the elevator is not occupied when you do elevator test operations or drive setup.

If the elevator test operations or drive setup are incorrect and the elevator does not stop accurately, it can cause serious injury or death.

Make sure that you correctly set and test these parameters before you operate an occupied elevator:

- **Speed ratio parameters (*o1-18 [Speed of Elevator Car]* and *o1-19 [Elevator Motor Speed]*) or mechanical parameters (*o1-20 [Sheave Diameter]*, *o1-21 [Roping Ratio]*, and *o1-22 [Mechanical Gear Ratio]*)**
- ***S5-11 [Deceleration Distance@High Speed]* and *S5-12 [Up Stopping Distance]***

If you do not set these parameters correctly and the elevator does not stop accurately, it can cause serious injury or death.

Use the MFDO signal set for *H2-xx = 61 [Pole Position Detection Complete]* to interlock the brake to make sure that the drive completes Pole Position Detection before it releases the brake.

If the drive releases the brake too soon, the pull of the counterweight can move the elevator and cause serious injury or death.

⚠WARNING

Verify the maximum drive output frequency before you apply an Up/Down command.

The drive can run the motor at high speeds. If the maximum drive output frequency is incorrect, it can cause serious injury or death.

Make sure that *b1-03 = 0 [Stopping Method Selection = Ramp to Stop]* before you apply an Up/Down command.

If *b1-03* ≠ *0* when you apply an Up/Down command, it can cause serious injury or death from elevator free-fall when you remove the Up/Down command.

Do not use the Automatic Fault Reset function when the application must not automatically recover after an error.

Incorrect application of the function can cause serious injury or death.

Crush Hazard

To use an elevator safely, you must install the external safety circuitry mentioned in this manual.

If you do not use external safety circuitry, the drive can drop the load and cause death or serious injury.

NOTICE

Damage to Equipment

Do not use the Rescue Operation function for long lengths of time.

The low DC bus voltage during Rescue Operation can stop the internal cooling fans of the drive. If you use the Rescue Operation function for a long length of time, it can trigger an *oH [Heatsink Overheat]* fault and can cause damage to the drive.

When the drive is using the Rescue Operation power supply, wait at least 5 seconds after you change parameter settings before you turn OFF the power supply.

If you turn OFF the power supply too soon, it can corrupt the parameter settings and cause incorrect drive performance. You must initialize the drive to resolve the problem.

4.2 Keypad Components and Functions

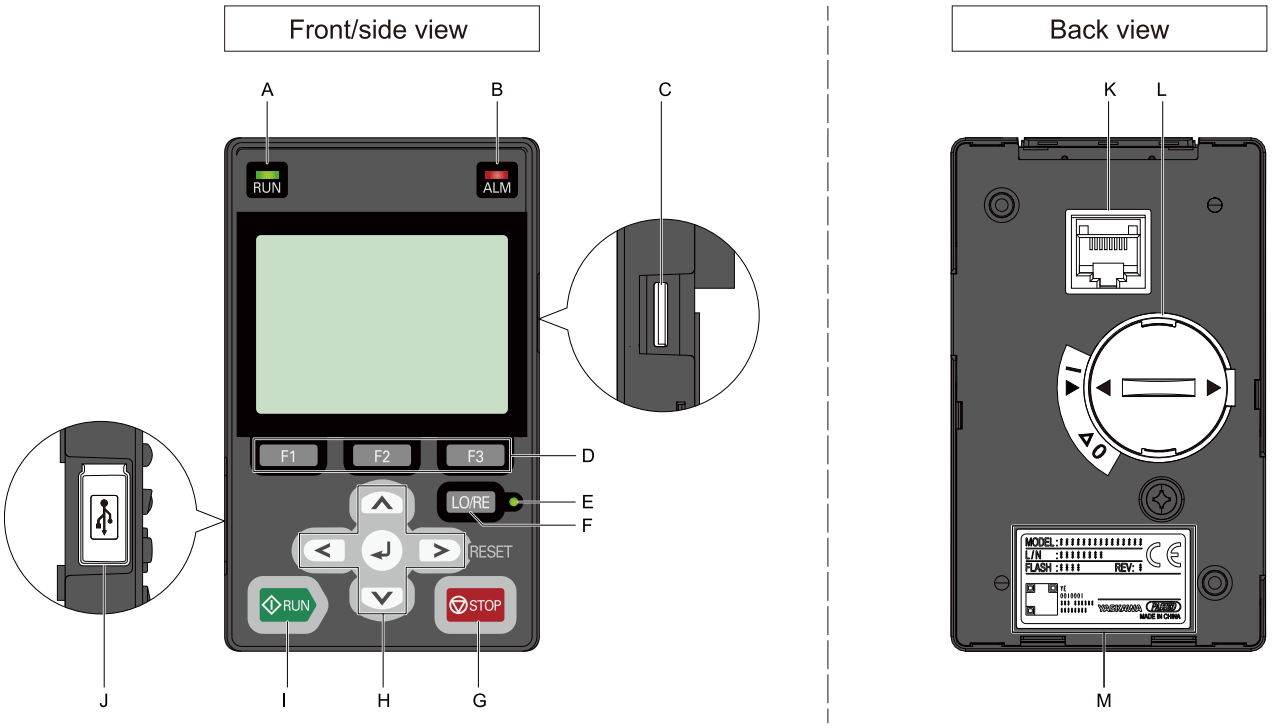

Figure 4.1 Keypad

Table 4.1 Keypad Components and Functions

Symbol	Name	Function
A	RUN LED 	Illuminates to show that the drive is operating the motor. The LED turns OFF when the drive stops. Flashes to show that: • The drive is decelerating to stop. • The drive received an Up/Down command with a speed reference of 0 Hz, but the drive is not set for zero speed control. Flashes quickly to show that: • The drive received an Up/Down command from the MFDI terminals and is switching to REMOTE Mode while the drive is in LOCAL Mode. • The drive received an Up/Down command from the MFDI terminals when the drive is not in Drive Mode. • The drive received an Emergency Stop command. • The safety function shut off the drive output. • You pushed  on the keypad while the drive is operating in REMOTE Mode.
B	ALM LED 	Illuminates when the drive detects a fault. Flashes when the drive detects: • Alarm • Operation Errors • A fault or alarm during Auto-Tuning The light turns off during regular drive operation. There are no alarms or faults.
C	microSD Card Slot	The insertion point for a microSD card.
D	Function Keys (F1, F2, F3) 	The menu shown on the keypad sets the functions for function keys. The name of each function is in the lower half of the display window.
E	LO/RE LED 	Illuminated: The keypad controls the Up/Down command (LOCAL Mode). OFF: The control circuit terminal or serial transmission device controls the Up/Down command (REMOTE Mode). **Note:** • LOCAL: Use the keypad to operate the drive. Use the keypad to enter Up/Down and Stop commands and the speed reference command. • REMOTE: Use the control circuit terminals or serial transmission to operate the drive. Use the speed reference source entered in *b1-01 [Speed Reference Selection 1]* and the Up/Down command source selected in *b1-02 [Up/Down Command Selection 1]*.

Symbol	Name	Function
F	LO/RE Selection Key LO/RE	Switches drive control for the Up/Down command and speed reference between the keypad (LOCAL) and an external source (REMOTE). **Note:** • The LOCAL/REMOTE Selection Key continuously stays enabled after the drive stops in Drive Mode. If the application must not switch from REMOTE to LOCAL because it will have a negative effect on system performance, set *o2-01 = 0 [LO/RE Key Function Selection = Disabled]* to disable LO/RE. • The drive will not switch between LOCAL and REMOTE when it is receiving an Up/Down command from an external source.
G	STOP Key STOP	Stops drive operation. **Note:** Push STOP to stop the motor. This will also apply when an Up/Down command (REMOTE Mode) is active at an external Up/Down command source. To disable STOP priority, set *o2-02 = 0 [STOP Key Function Selection = Disabled]*.
H	Left Arrow Key	• Moves the cursor to the left. • Goes back to the previous screen.
	Up Arrow Key/Down Arrow Key /	• Scrolls up or down to show the next item or the previous item. • Selects parameter numbers, and increments or decrements setting values.
	Right Arrow Key (RESET)	• Moves the cursor to the right. • Continues to the next screen. • Resets the drive to clear a fault.
	ENTER Key	• Enters parameter values and settings. • Selects menu items to move between keypad displays. • Selects each mode, parameter, and set value.
I	RUN Key RUN	Starts the drive in LOCAL Mode. Starts the operation in Auto-Tuning Mode. **Note:** Before you use the keypad to operate the motor, push LO/RE on the keypad to set the drive to LOCAL Mode.
J	USB Terminal	For factory adjustment
K	RJ-45 Connector	Connects to the drive using an RJ-45 8-pin straight through UTP CAT5e extension cable or keypad connector.
L	Clock Battery Cover	Remove this cover to install or replace the clock battery. **Note:** You must supply the clock battery *1. It is not included with the keypad.
M	Nameplate	Shows the model number of the keypad and other information **Note:** • "REV" identifies the hardware and software version of the keypad. • "FLASH" identifies the version of the flash memory.

*1 Refer to *Replace the Keypad Battery on page 390* for information about the correct clock battery and the installation procedure.

◆ LCD Display

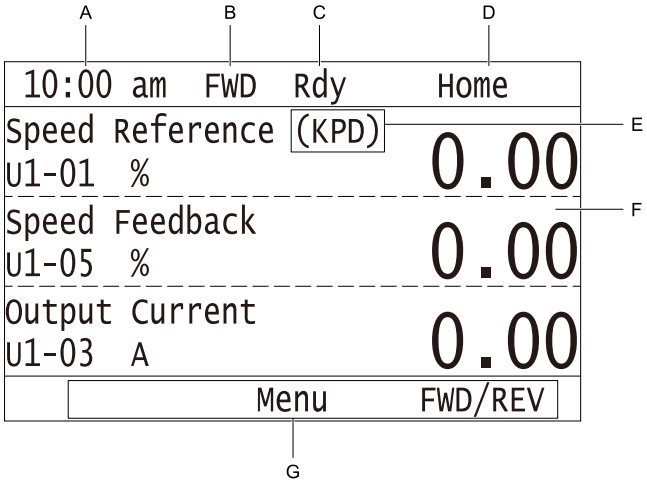

Figure 4.2 LCD Display Indications

Table 4.2 LCD Display Indications and Meanings

Symbol	Name	Description
A	Time display area	Shows the current time. Set the time on the default settings screen.
B	Up/Down command indication	Shows direction of motor rotation. • FWD: Shown when set to forward run (Up command). • REV: Shown when set to reverse run (Down command).
C	Ready	The screen will show Rdy when the drive is ready for operation or when the drive is running.
D	Mode display area	Shows the name of the current mode or screen.
E	Speed reference source indicator	Shows the current speed reference source. • KPD: keypad • AI: analog input terminal (terminals A1 to A3) • COM: MEMOBUS/Modbus communications • OPT: option card
F	Data display area	Shows parameter values, monitor values, and details of the results of operations.
G	Function keys 1 to 3 (F1 to F3)	The function names shown in this area will change when the selected screen changes. Push one of the function keys F1 to F3 on the keypad to do the function.

◆ Indicator LEDs and Drive Status

LED	Display	Drive Status
RUN LED 	Illuminated	The drive is operating the motor.
	Flashing	• The drive is decelerating to stop. • The drive received an Up/Down command with a speed reference of 0 Hz, but the drive is not set for zero speed control.
	Flashing Quickly	• The drive received an Up/Down command from the MFDI terminals and is switching to REMOTE Mode while the drive is in LOCAL Mode. • The drive received an Up/Down command from an external source and the drive is not in Drive Ready (READY) condition. • The drive received an Emergency Stop command. • The safety function shut off the drive output. • You pushed STOP on the keypad while the drive is operating in REMOTE Mode. • The drive is energized with an active Up/Down command. • The voltage of the main circuit power supply decreased, and the 24 V power supply is supplying power only to the drive.
	OFF	The motor is stopped.
ALM LED 	Illuminated	The drive detects a fault.
	Flashing	The drive detects: • An alarm • An *oPE* parameter setting error • A fault or error during Auto-Tuning **Note:** The digital characters displayed on the keypad will also flash.
	OFF	There are no drive faults or alarms.
LO/RE LED 	Illuminated	The keypad controls the Up/Down command (LOCAL Mode).
	OFF	The control circuit terminal or serial transmission device controls the Up/Down command (REMOTE Mode).

■ LED Flashing Statuses

Refer to Figure 4.3 for the difference between “flashing” and “flashing quickly”.

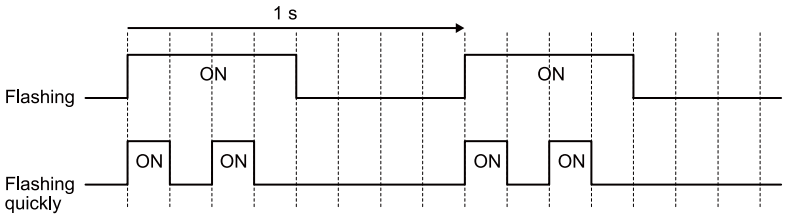

Figure 4.3 LED Flashing Statuses

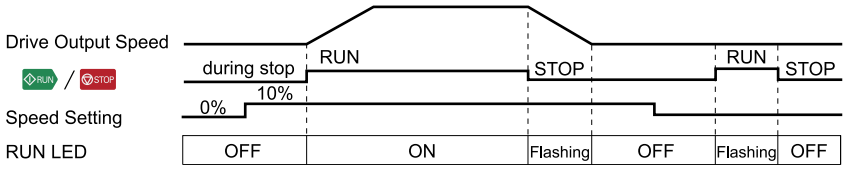

Figure 4.4 Relation between RUN indicator and Drive Operation

◆ Keypad Mode and Menu Displays

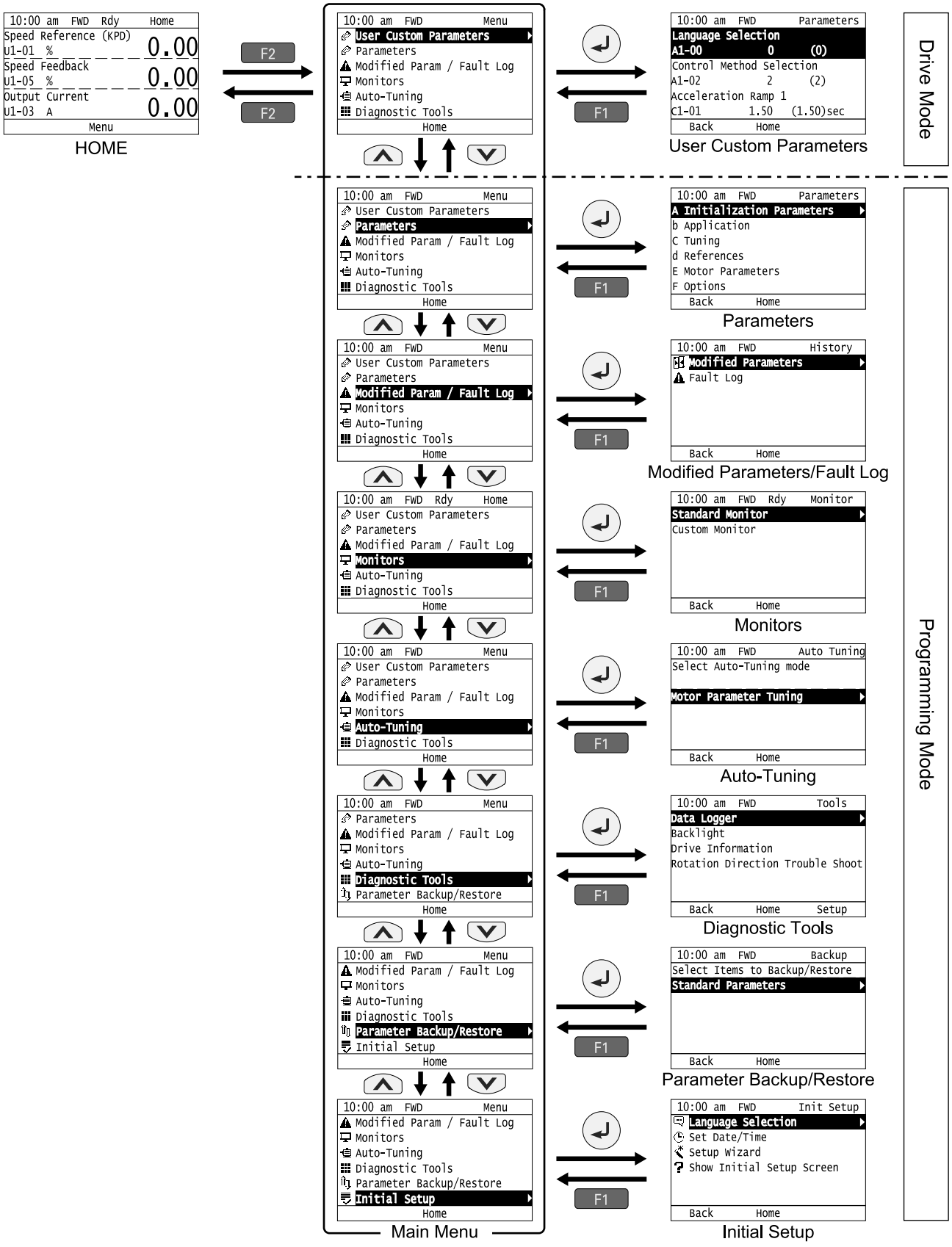

Figure 4.5 Keypad Functions and Display Levels

Note:

- Energize the drive with factory defaults to show the Initial Setup screen. Push F2 (Home) to show the Home screen.
  - Select [No] from the [Show Initial Setup Screen] setting not to display the Initial Setup screen.
- Push < from the Home screen to show drive monitors.
- Push ↵ to set *d1-01 [Reference 1]* when the Home screen shows *U1-01 [Speed Reference]* in LOCAL Mode.
- The keypad will show [Rdy] when the drive is in Drive Mode. The drive is prepared to accept an Up/Down command.
- Set *b1-08 [Up/Down Select in PRG Mode]* to accept or reject an Up/Down command from an external source while in Programming Mode.
  - Set *b1-08 = 0 [Disregard RUN while Programming]* to reject the Up/Down command from an external source while in Programming Mode (default).
  - Set *b1-08 = 1 [Accept RUN while Programming]* to accept the Up/Down command from an external source while in Programming Mode.
  - Set *b1-08 = 2 [Allow Programming Only at Stop]* to prevent changes from Drive Mode to Programming Mode while the drive is operating.

Table 4.3 Drive Modes, Menu Screens, and Functions

Mode	Menu Screen	Function
Programming Mode	User Custom Parameters	Shows the User Parameters.
	Parameters	Changes parameter settings.
	Modified Parameters/Fault Log	Shows modified parameters and fault history.
Drive Mode	Monitors	Sets monitor items to display.
Programming Mode	Auto-Tuning	Auto-Tunes the drive.
	Diagnostic Tools	• Sets data logs and backlight. • Does the Rotation Direction Trouble Shoot.
	Parameter Backup/Restore	Saves parameters to the keypad as backup.
	Initial Setup	• Changes initial settings. • Sets the basic parameters with the Setup Wizard.

4.3 LED Indicator Status

The LED Status Ring on the drive cover shows the drive operating status.

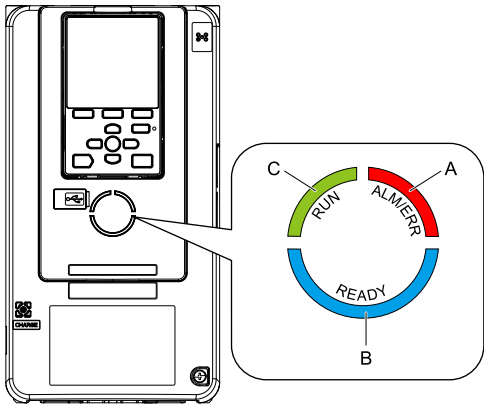

A - ALM/ERR **C - RUN**
B - READY

LED		Status	Description
A	ALM/ERR	Illuminated	The drive detects a fault.
		Flashing *1	The drive detects: • An alarm • An *oPE* parameter setting error • A fault or error during Auto-Tuning **Note:** The LED will illuminate to identify a fault if the drive detects a fault and an alarm at the same time.
		OFF	There are no drive faults or alarms.
B	READY	Illuminated	The drive is operating or is prepared for operation.
		Flashing *1	The drive is in *STo [Safe Torque OFF]* condition.
		Flashing Quickly *1	The voltage of the main circuit power supply decreased, and the 24 V power supply is supplying power only to the drive.
		OFF	• The drive detects a fault. • There is no fault and the drive received an Up/Down command, but the drive cannot operate. For example, in Programming Mode or when RUN is flashing.
C	RUN	Illuminated	The drive is in regular operation.
		Flashing *1	• The drive is decelerating to stop. • The drive received an Up/Down command with a speed reference of 0 Hz, but the drive is not set for zero speed control. • The drive received a DC Injection Braking command.
		Flashing Quickly *1	• The drive received an Up/Down command from the MFDI terminals and is switching to REMOTE Mode while the drive is in LOCAL Mode. • The drive received an Up/Down command from the MFDI terminals when the drive is not in Drive Mode. • The drive received an Emergency Stop command. • The safety function shuts off the drive output. • You pushed STOP on the keypad while the drive is operating in REMOTE Mode.
		OFF	The motor is stopped.

*1 Refer to Figure 4.6 for the difference between “flashing” and “flashing quickly”.

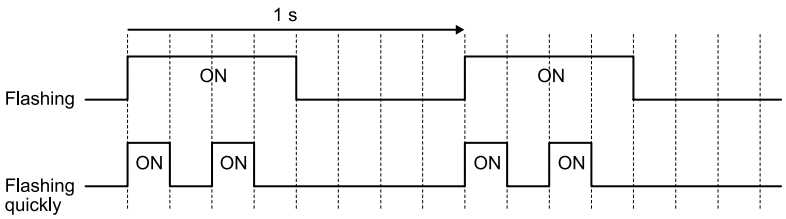

Figure 4.6 LED Flashing Statuses

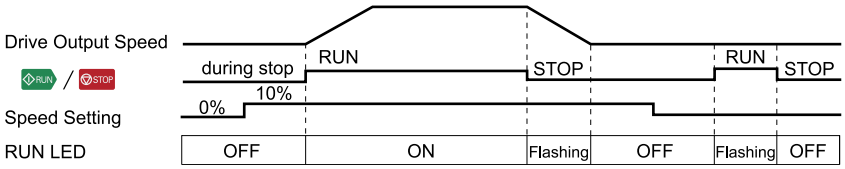

Figure 4.7 Relation between RUN LED and Drive Operation

4.4 Start-up Procedures

This section gives the basic steps necessary to start up the drive.

Use the flowcharts in this section to find the most applicable start-up method for your application.

This section gives information about only the most basic settings.

◆ Flowchart A: Connect and Run the Motor with Minimum Setting Changes

Flowchart A shows a basic start-up sequence to connect and run a motor with a minimum of setting changes. Settings can change when the application changes.

Use the drive default parameter settings for basic applications where high precision is not necessary.

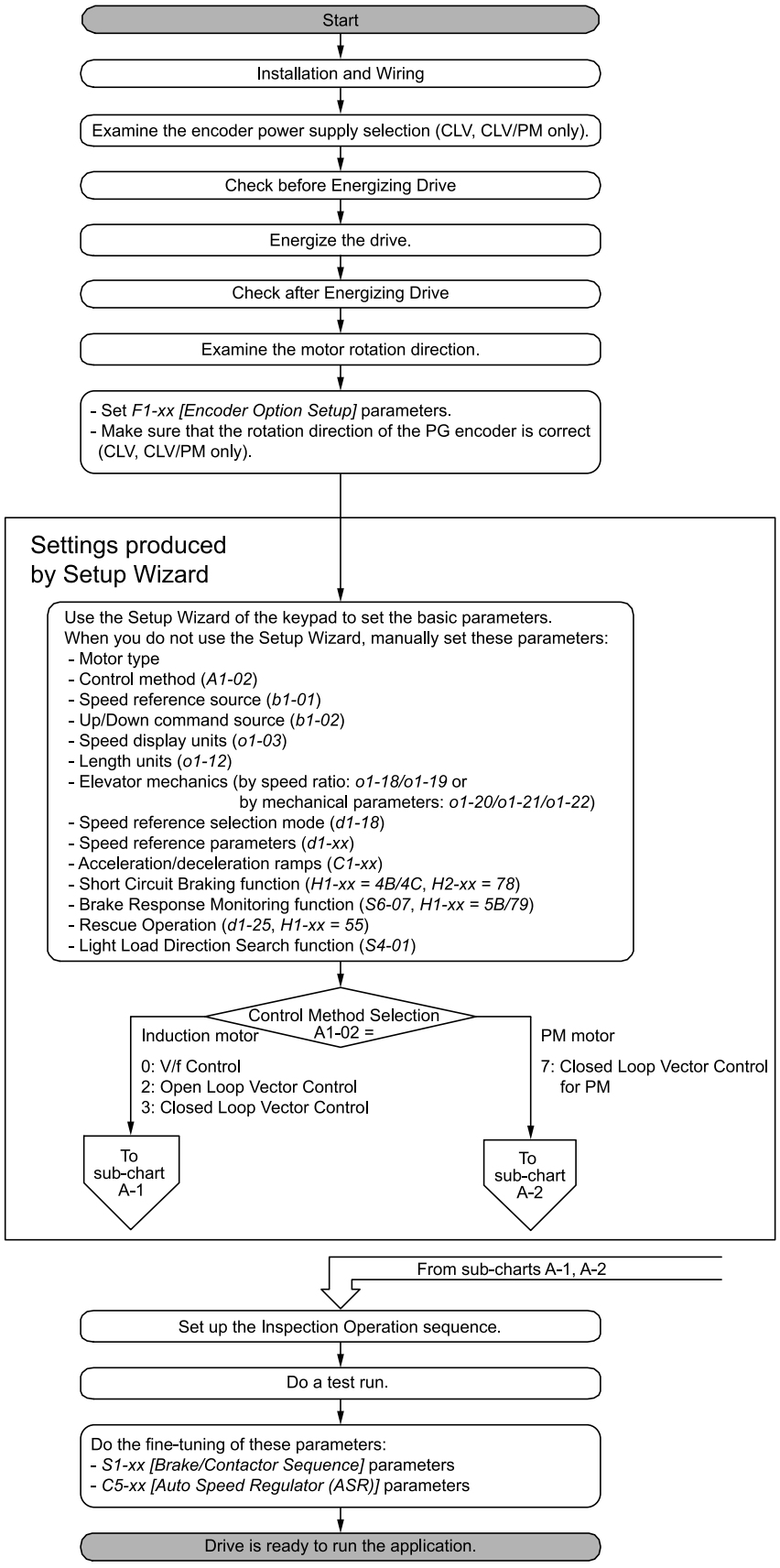

Figure 4.8 Basic Steps before Startup

◆ Sub-Chart A-1: Induction Motor Auto-Tuning and Test Run Procedure

Sub-Chart A-1 gives the basic steps to start up the drive for an induction motor when *A1-02 = 0, 2, or 3 [Control Method Selection = V/f, OLV, or CLV]*.

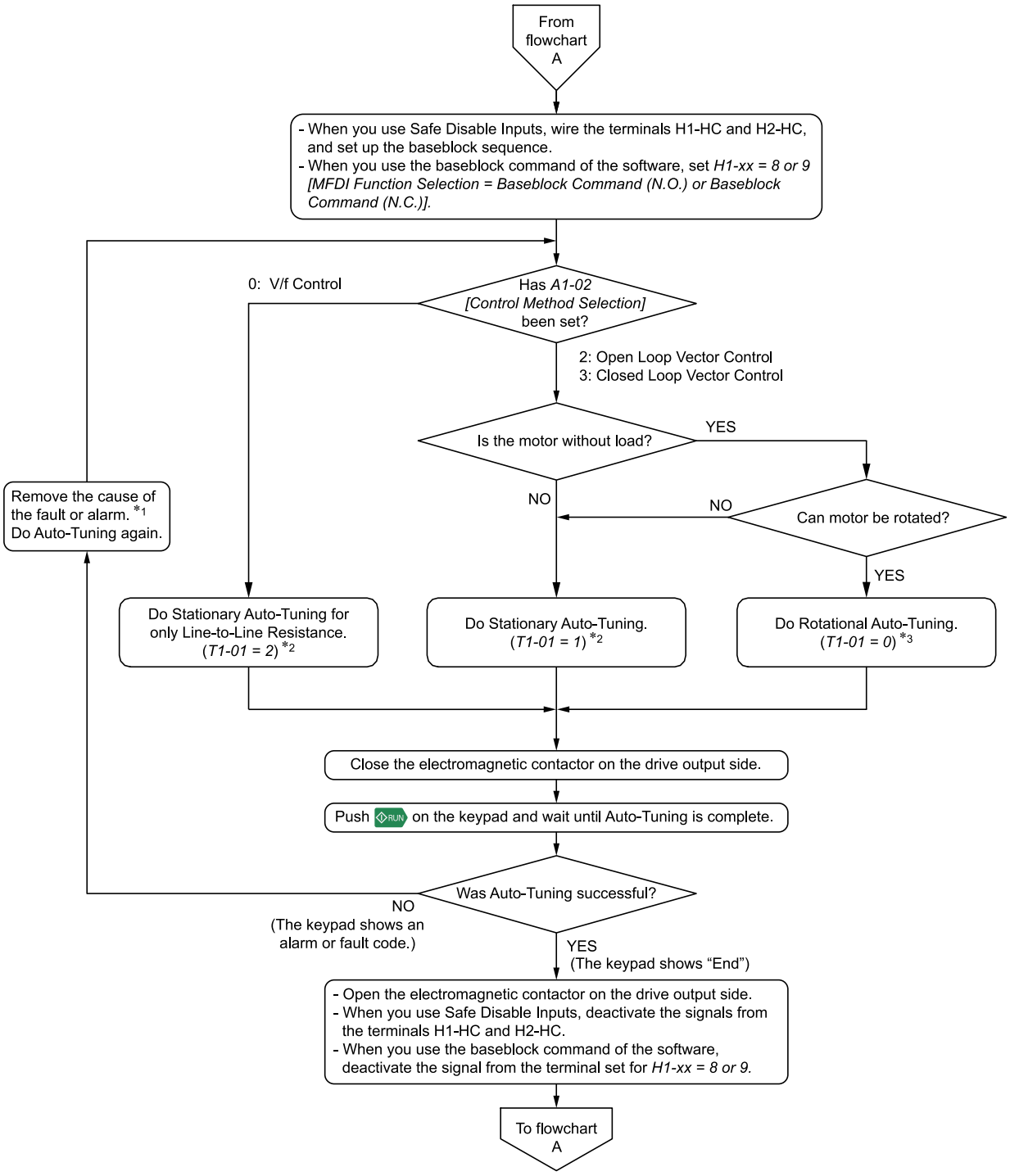

Figure 4.9 Induction Motor Auto-Tuning and Test Run Procedure

*1 Refer to *Auto-Tuning Error on page 343* for more information about the causes of the faults or alarms and possible solutions.
*2 Before you do Stationary Auto-Tuning, make sure that the holding brake is closed.
*3 Before you do Rotational Auto-Tuning, make sure that the holding brake is released.

◆ Sub-Chart A-2: PM Motor Auto-Tuning and Test Run Procedure

Sub-Chart A-2 gives the basic steps to start up the drive for a PM motor.

Note:

1. Although Auto-Tuning will set parameters for speed control with an encoder, set *F1-05 [Encoder 1 Rotation Selection]* before starting Auto-Tuning.
2. When you replace the encoder and there is no change to other facilities, do Encoder Tuning (*T2-01 = 3*) only.

⚠ WARNING **Crush Hazard**

Test the system to make sure that the drive operates safely after you wire the drive and set parameters.
If you do not test the system, it can cause serious injury or death.

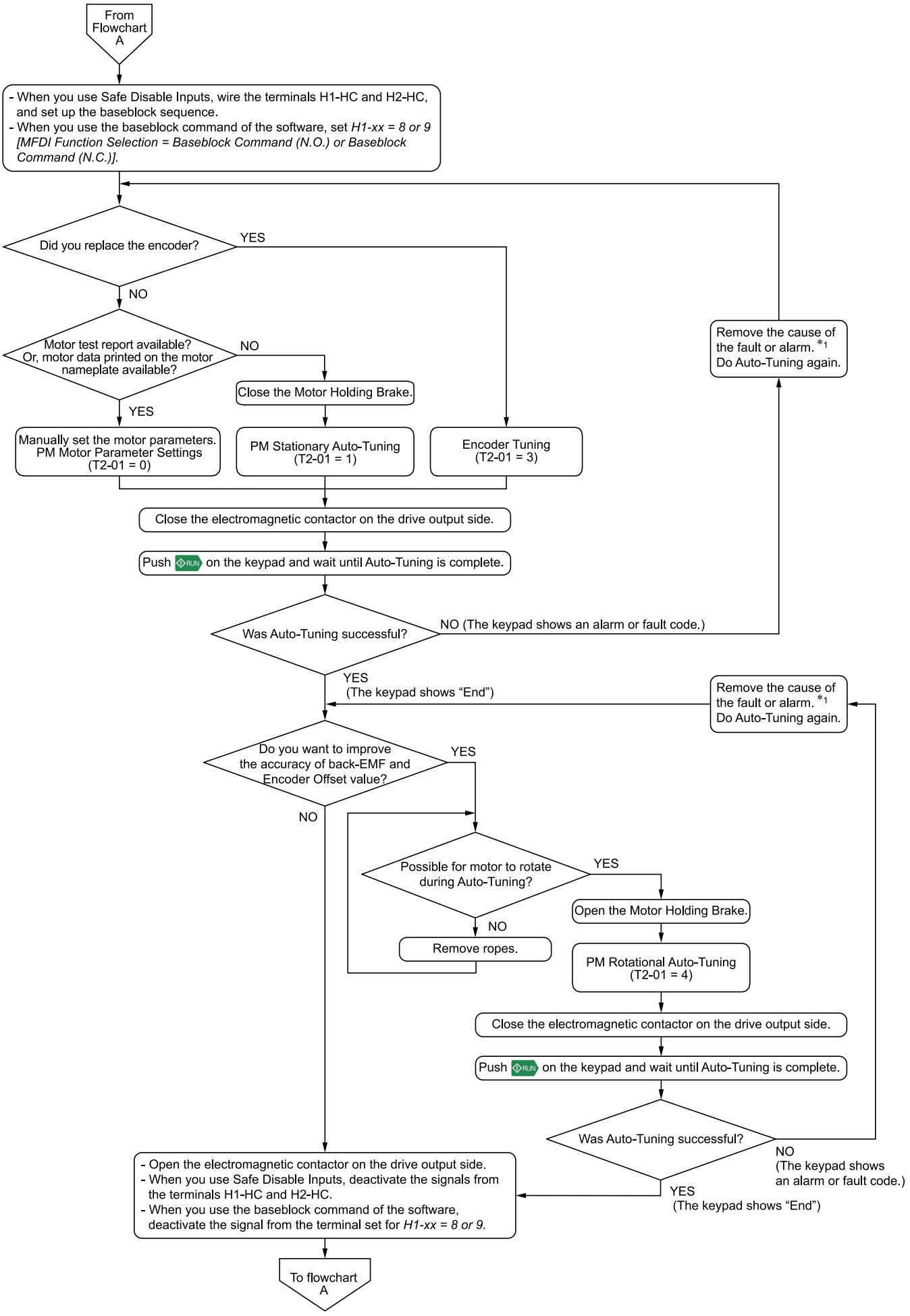

Figure 4.10 PM Motor Auto-Tuning and Test Run Procedure

*1 Refer to *Auto-Tuning Error on page 343* for more information about the causes of the faults or alarms and possible solutions.

4.5 Items to Check before Starting Up the Drive

◆ Check before Energizing the Drive

Examine these items before you energize the drive:

- Make sure that all wires are connected correctly. Also make sure that motor phases are connected in the correct sequence.
- Make sure that there are no screws, loose wire ends, or tools in the drive.
- If you use an encoder option card, make sure that you wire the encoder correctly and set the power supply on the option card according to the encoder specification.
- Refer to the motor nameplate and record the information in this table.

Item	Value
Motor Rated Power	kW
Motor Rated Voltage	V
Motor Rated Current (FLA)	A
Motor Rated Frequency	Hz

Item	Value
Motor Maximum Frequency	Hz
Motor Pole Count	Number of Motor Poles
Motor Base Rotation Speed	min^{-1} (r/min)
Number of Motor Encoder Pulses	ppr

◆ Check after Energizing the Drive

Check the items in Table 4.4 after you energize the drive. The keypad display is different depending on drive status.

Table 4.4 Display Status after You Energize the Drive

Status	Display	Description
During Usual Operation	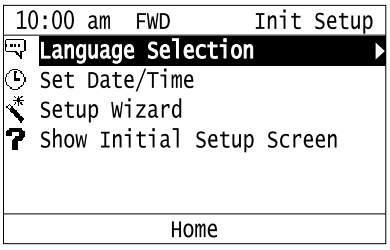 Initial Setup Screen or 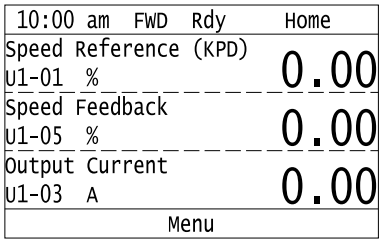 HOME Screen	• The data display area will show the Initial Setup screen or the HOME screen • Energize the drive with factory defaults to show the Initial Setup screen. Select [No] from the [Show Initial Setup Screen] settings to show the HOME screen without showing the Initial Setup screen.
When the Drive Detects a Fault	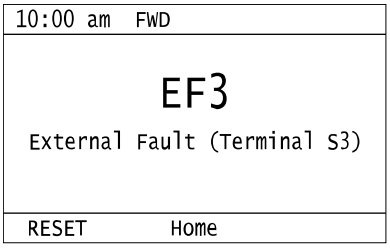	The display is different for different faults. Refer to “Troubleshooting” to remove the cause of the fault. ALM will illuminate. **Note:** If the screen shows a different screen, do these steps to show the fault content again: 1. Push < from the HOME screen. 2. Push F2 (Home) from a different screen than the HOME screen.

◆ Make the Initial Settings

The keypad will show the Initial Setup screen when you energize the drive for the first time. You can set the date and time and the keypad language. The Setup Wizard prepares the drive for operation, including setting the basic

parameters and doing Auto-Tuning. Refer to *Set Parameters Using the Setup Wizard on page 159* for more information.

Note:

If the keypad does not show the Initial Setup screen, select [Initial Setup] from the Main Menu to show the Initial Setup screen.

1. Make the initial settings for each item.

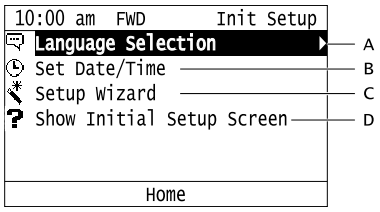

A - Language Selection
B - Set Date/Time
C - Setup Wizard
D - Show Initial Setup Screen

Note:

If you select [Yes] from the [Show Initial Setup Screen] setting, the keypad will show the Initial Setup screen each time the drive is energized.

If you select [NO], the keypad will not show the Initial Setup screen each time the drive is energized, starting with the next time.

2. Push F2 (Home).

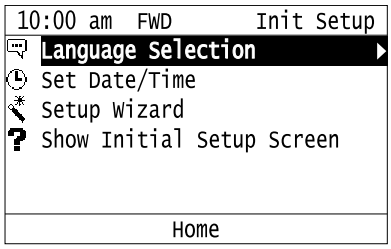

The display shows the HOME screen.

◆ Control Method Selection

When you first energize the drive, select one of the four control methods to match the application. Encoder feedback cards are necessary for Closed Loop Vector Control methods. This table shows possible control methods depending on the motor type and shows the necessary encoder feedback card.

Machine Type	Control Methods	A1-02 Setting	Encoder Option Card
Induction motor without encoder	V/f Control	0	No card necessary
	Open Loop Vector Control	2	No card necessary
Induction motor with incremental encoder	Closed Loop Vector Control	3	PG-B3/PG-X3
Permanent magnet motor with EnDat 2.1/01, EnDat 2.2/01, or EnDat 2.2/22 encoder	Closed Loop Vector Control for PM motors	7	PG-F3
Permanent magnet motor with ERN1387 encoder	Closed Loop Vector Control for PM motors	7	PG-E3
Yaskawa IPM motor with incremental encoder	Closed Loop Vector Control for PM motors	7	PG-X3
Permanent magnet motor with incremental encoder	Closed Loop Vector Control for PM motors	7	PG-B3/PG-X3

◆ Setting the Motor Rotation Direction

Depending on the system configuration of the elevator, it can be necessary to change the motor direction to make the elevator travel up when the drive receives an Up command.

When the drive receives an Up command, it puts out voltage in U-V-W phase sequence.

- Examine the motor rotation with this phase sequence (for most motors, counter-clockwise when looking from the shaft side).
- If a U-V-W sequence to the motor drives the elevator in the Up direction, set *b1-14 = 0 [Phase Order Selection = Standard]*.

- If a U-V-W sequence to the motor drives the elevator in the Down direction, set *b1-14 = 1 [Switch Phase Order]*.

Note:

Always do the motor rotation direction setup before you set the encoder rotation direction.

If these problems occur in the test run, use the Rotation Direction Trouble Shoot function to help solve them:

- There is current flow, but no motor rotation.
- The drive detects a *dv3 [Inversion Detection]*, *dv4 [Inversion Prevention Detection]*, *oL2 [Drive Overload]*, or *PGo [Encoder (PG) Feedback Loss]* fault.
- The motor rotates in a different direction than expected.

Refer to *Rotation Direction Trouble Shoot Function on page 167* more information about this function.

◆ Setting the Encoder (Pulse Generator)

■ Encoder Resolution Setup

Set the encoder resolution (incremental signal in case of absolute encoders with Sin/Cos tracks) in *F1-01 [Encoder 1 Pulse Count (PPR)]*.

■ Encoder Rotation Direction Setup

Do these steps to make sure that the encoder rotation direction is set up correctly in the drive.

- **When information about the signal sequence of the encoder is available:**
  - Check the sequence of encoder phases A and B when the motor drives the elevator in the Up direction.
  - If the encoder A phase leads phase B, set *F1-05 = 0 [Encoder 1 Rotation Selection = Pulse A leads in Up Direction]*.
  - If the encoder B phase leads phase A, set *F1-05 = 1 [Pulse B leads in Up Direction]*.
- **When information about the signal sequence of the encoder is not available:**
  - Manually turn the motor in the elevator Up direction while you check the value of *U1-05 [Speed Feedback]*.
  - If the value in *U1-05* is positive, the encoder direction is correct.
  - If the value in *U1-05* is negative, change the setting of *F1-05*.

Note:

Always do the motor rotation direction setup before you set the encoder rotation direction. Refer to *Setting the Motor Rotation Direction on page 133*.

◆ Keypad Display Unit Selection

You can use *o1-03 [Speed Display Unit Selection]* to choose between different display units for speed-related parameters and monitors, acceleration and deceleration ramps, and jerk characteristics. Use the table below to determine the correct *o1-03* setting for your application.

o1-03 Setting	Display Unit		
	Speed Reference Settings/Monitors (d1-xx, U1-01, U1-02, ...)	Accel & Decel Ramp (C1-xx)	Jerk Characteristics (C2-xx)
0 [0.01 Hz]	0.01 Hz	0.01 s	0.01 s
1 [0.01% (100% = E1-04)]	0.01%		
2 [Revolutions Per Minute (RPM)]	1 rpm		
3 [User Units (o1-10 & o1-11)]	User defined		
4 [Elevator Unit1 - m/s, s, s]	0.01 m/s		
5 [Elevator Unit2 - m/(s, s^2, s^3)]	0.01 m/s	0.01 m/s^2	0.01 m/s^3
6 [Elevator Unit3-ft/(min,s^2,s^3)]	0.1 ft/min	0.01 ft/s^2	0.01 ft/s^3

If you want to use settings 4 to 6, you must program certain mechanical data to the drive before you change *o1-03*.

1. Correctly set the motor data. Make sure that the settings for *E1-04 [Maximum Output Frequency]* and *E2-04 [Motor Pole Count]* or *E5-04 [PM Motor Pole Count]* are correct.
2. Set up the elevator mechanics:

a. Use dedicated mechanical data:
   i. Set the traction sheave diameter in mm units to *o1-20 [Sheave Diameter]*.
   ii. Set the correct roping to *o1-21 [Roping Ratio]*.
   iii. When you use a geared machine, set the gear ratio ($n_{Motor}/n_{Traction\ Sheave}$) to *o1-22 [Mechanical Gear Ratio]*. When you use a gearless machine, set *o1-22 = 1.0*.
   iv. Set *o1-03 = 4, 5, or 6*. The drive will automatically change the unit and setting values of related parameters.

b. If you do not know the mechanical data, for example, in a modernization case, you can use the speed ratio to determine the mechanics:
   i. Set the speed of the elevator car to *o1-18 [Speed of Elevator Car]*.
   ii. Set the elevator motor speed to *o1-19 [Elevator Motor Speed]*.

Note:
When you use the speed ratio, the drive ignores the dedicated mechanical parameters (*o1-2x*).

4.6 Keypad Operation

◆ Home Screen Display Selection

This section gives information about the content shown on the HOME screen and the functions that you can control from the HOME screen.

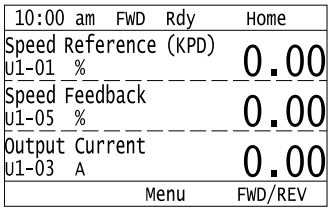

■ View Monitors Shown in Home Screen

This figure shows monitor data in the data display area of the HOME screen.

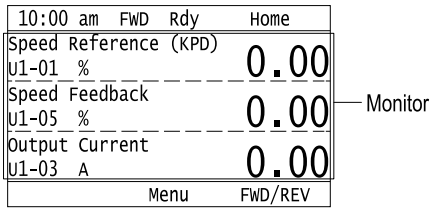

■ Change Motor between Up/Down Command

You can change the direction of motor rotation when you operate the drive from the keypad. Push LO/RE to illuminate LO/RE.

Push and hold F3 (FWD/REV) to toggle the direction of motor rotation between forward and reverse.

Note:

To enable LO/RE, set *o2-01 = 1 [LO/RE Key Function Selection = Enabled]*.

■ Show the Standard Monitor

Push < to show the standard monitor (*Ux-xx*). When you push F2 (Home), the keypad goes back to the home screen.

Note:

When a fault, minor fault, or an error occurs, push < to show the content of the fault. Push < again to show the standard monitor (*Ux-xx*).

■ Change the Speed Reference Value

1. Push ↵ to access the screen to change the speed.
2. Push < or > to select the digit to change, then push ^ or v to change the value.
3. Push ↵ to keep the changes.

Note:

The HOME screen must show *U1-01 [Speed Reference]* or you must set the keypad as the Up/Down command source (REMOTE) to use this function.

■ Show the Main Menu

Push F2 to show the main menu. Push F2 (Home) to go back to the HOME screen.

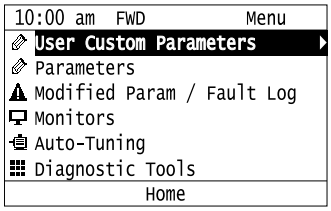

◆ Examine User Custom Parameters

The User Custom Parameters show the parameters set in *A2-01 to A2-32 [User Parameter 1 to User Parameter 32]*. This lets users to quickly access and change settings to these parameters.

1. Push F2 (Home) to show the HOME screen.

Note:
- When the drive is in HOME Mode, the screen shows [Home] in the upper right-hand corner of the screen.
- If the screen does not show [Home] for F2, push F1 (Back) to show [Home] for F2.

2. Push F2 (Menu).

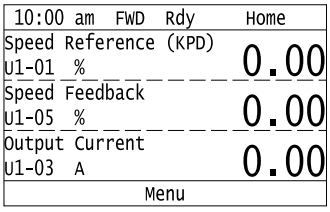

3. Push ^ or v to select [User Custom Parameters], then push ↵.

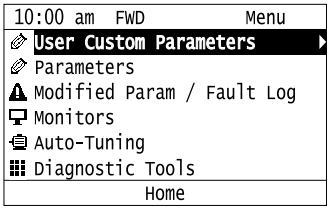

4. Push ^ or v to show the parameter to examine.

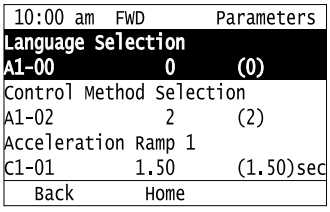

5. To re-edit a parameter, push ^ or v, select the parameter to edit, then push ↵.

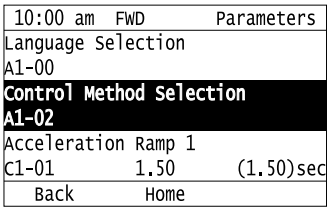

6. Push < or > to select the digit, then push ^ or v to change the value.

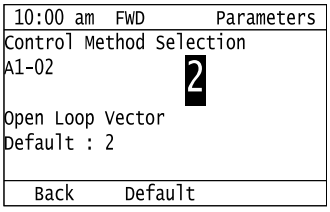

7. When you are done changing the value, push ↵.

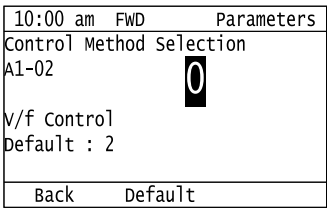

The parameter setting procedure is complete.

◆ Change Parameter Setting Values

This example shows how to change the setting value for *C1-01 [Acceleration Ramp 1]*. Do the steps in this procedure to set parameters for the application.

1. Push F2 (Home) to show the HOME screen.

Note:
- When the drive is in HOME Mode, the screen shows [Home] in the upper right-hand corner of the screen.
- If the screen does not show [Home] for F2, push F1 (Back) to show [Home] for F2.

2. Push F2 (Menu).

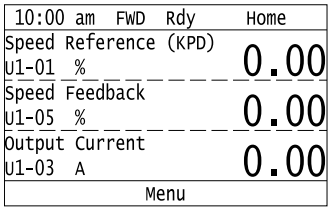

3. Push ▲ or ▼ to select [Parameters], then push ↵.

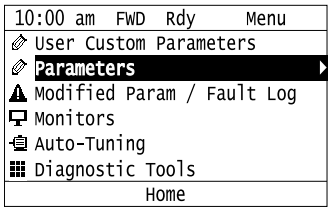

4. Push ▲ or ▼ to select [C Tuning], then push ↵.

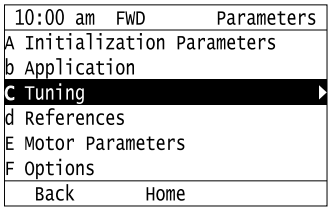

5. Push ▲ or ▼ to select [C1 Accel & Decel Ramp], then push ↵.

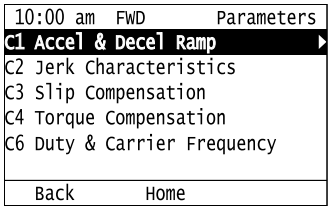

6. Push ▲ or ▼ to select *C1-01*, then push ↵.

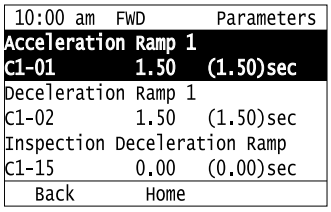

7. Push < or > to select the specified digit, then push ^ or v to select the correct number.

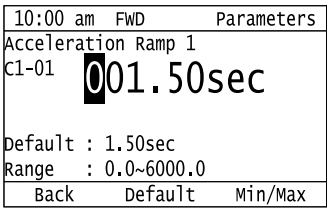

- Push F2 (Default) to set the parameter to factory default.
- Push F3 (Min/Max) to show the minimum value or the maximum value on the display.

8. Push Enter to keep the changes.

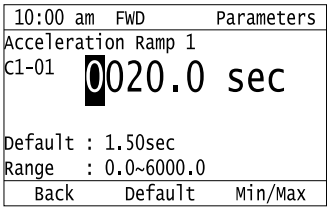

9. Continue to change parameters, then push F1 (Back), F2 (Home) to go back to the HOME screen when you are done changing all the applicable parameters.

◆ Check Modified Parameters

This procedure will show all parameters that are not at their default values. This is very useful when you replace a drive. This lets you quickly access and re-edit changed parameters. When all parameters are at their default values, the keypad will show "0 Parameters".

1. Push F2 (Home) to show the HOME screen.

Note:
- When the drive is in HOME Mode, the screen shows [Home] in the upper right-hand corner of the screen.
- If the screen does not show [Home] for F2, push F1 (Back) to show [Home] for F2.

2. Push F2 (Menu).

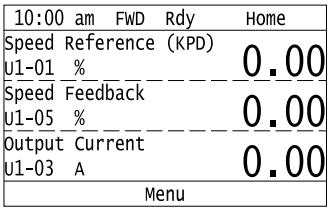

3. Push ^ or v to select [Modified Param / Fault Log], then push Enter.

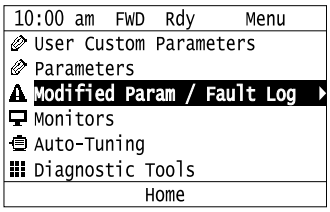

4. Push ^ or v to select [Modified Parameters], then push Enter.

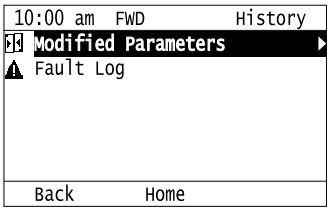

5. Push ↵.

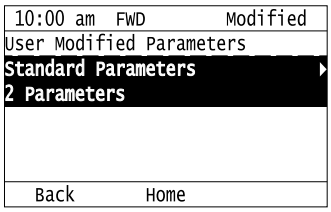

6. Push ▲ or ▼ to show the parameter to examine.

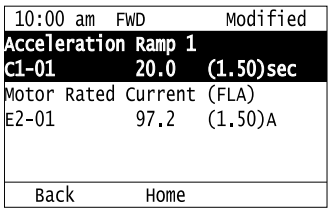

7. To re-edit a parameter, push ▲ or ▼, select the parameter to edit, then push ↵.

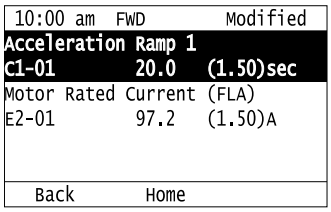

8. Push ◀ or ▶ to select the digit, then push ▲ or ▼ to change the value.

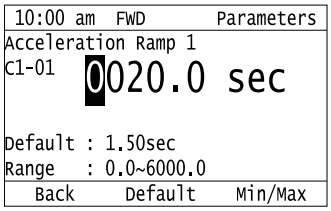

9. When you are done changing the value, push ↵.

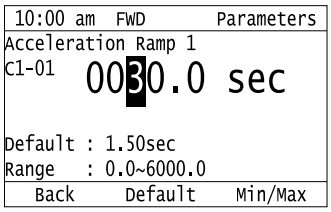

The parameter revision procedure is complete.

◆ Restore Modified Parameters to Defaults

This procedure will set all parameters with changed values to their default settings.

1. Push F2 (Home) to show the HOME screen.

Note:
- When the drive is in HOME Mode, the screen shows [Home] in the upper right-hand corner of the screen.
- If the screen does not show [Home] for F2, push F1 (Back) to show [Home] for F2.

2. Push F2 (Menu).

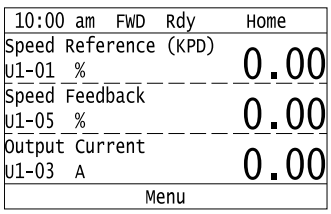

3. Push ▲ or ▼ to select [Modified Param / Fault Log], then push ↵.

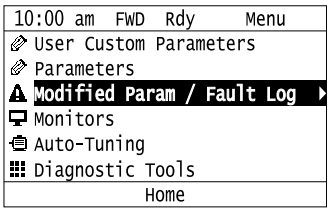

4. Push ▲ or ▼ to select [Modified Parameters], then push ↵.

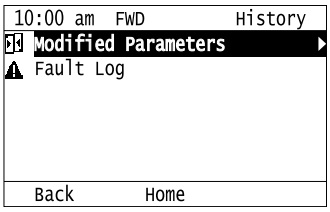

5. Push ↵.

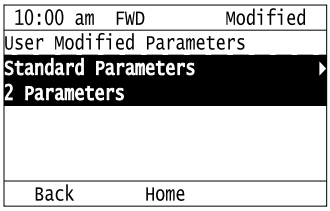

6. Push ▲ or ▼ to select the parameters to return to their default settings, then push ↵.

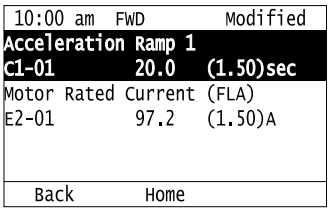

7. Push F2 (Default).

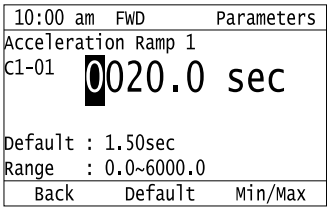

8. Push ↵.

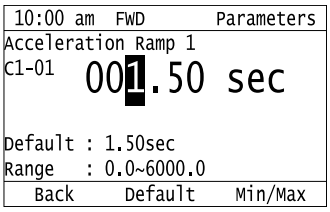

The modified parameters are now set to default values.

◆ Show Fault History

You can examine a maximum of 10 fault codes and dates and times that the faults occurred.

Note:
- To monitor the date and time of faults, you must first set the date and time on the keypad.
- If the keypad does not have a clock battery, you must set the date and time each time you energize the drive.

1. Push F2 (Home) to show the HOME screen.

Note:
• When the drive is in HOME Mode, the screen shows [Home] in the upper right-hand corner of the screen.
• If the screen does not show [Home] for F2, push F1 (Back) to show [Home] for F2.

2. Push F2 (Menu).

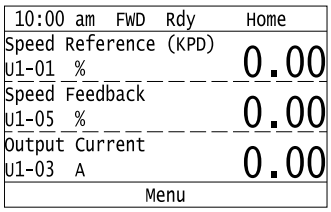

3. Push ^ or v to select [Modified Param / Fault Log], then push ↵.

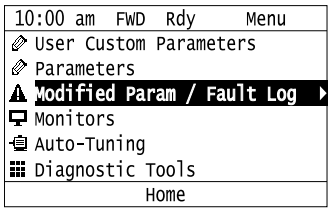

4. Push ^ or v to select [Fault Log], then push ↵.

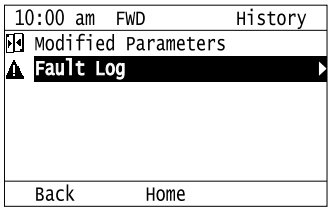

5. Push ^ or v to show the fault history you will examine.

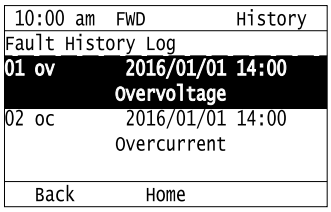

◆ Show the Monitor

This section shows how to show the standard monitors (*Ux-xx*).

1. Push F2 (Home) to show the HOME screen.

Note:
• When the drive is in HOME Mode, the screen shows [Home] in the upper right-hand corner of the screen.
• If the screen does not show [Home] for F2, push F1 (Back) to show [Home] for F2.

2. Push F2 (Menu).

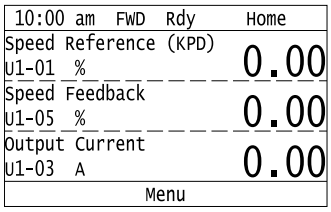

3. Push ▲ or ▼ to select [Monitors], then push ↵.

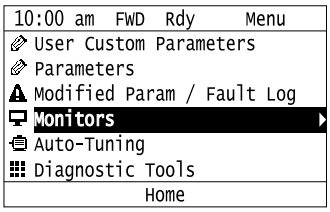

4. Push ▲ or ▼ to select [Standard Monitor], then push ↵.

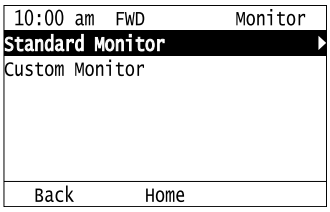

5. Push ▲ or ▼ to select monitor group, then push ↵.

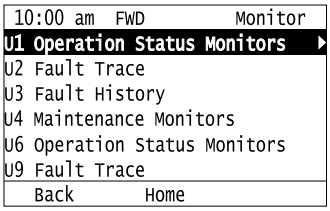

6. Push ▲ or ▼ to change the monitor number to show the monitor item.

Note:

Push ← to go back to the previous page.

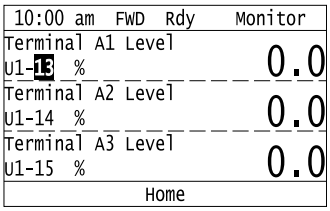

◆ Set Custom Monitors

You can select and register a maximum of 12 monitoring items to regularly show on the keypad. This procedure shows how to set the motor speed to [Custom Monitor 1].

1. Push F2 (Home) to show the HOME screen.

Note:

- When the drive is in HOME Mode, the screen shows [Home] in the upper right-hand corner of the screen.
- If the screen does not show [Home] for F2, push F1 (Back) to show [Home] for F2.

2. Push F2 (Menu).

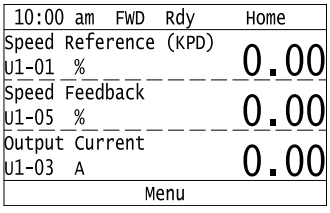

3. Push ▲ or ▼ to select [Monitors], then push ↵.

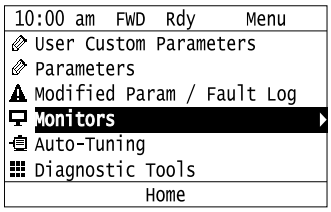

4. Push ▲ or ▼ to select [Custom Monitor], then push F3 (Setup).

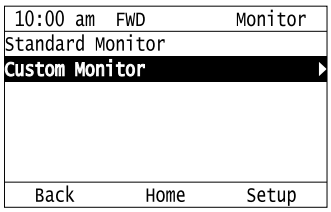

5. Push ▲ or ▼ to select [Custom Monitor 1], then push ↵.

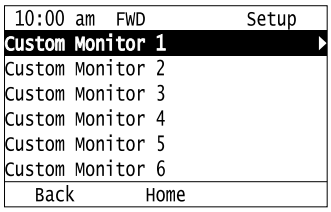

6. Push ▲ or ▼ to select the monitor number to register, then push ↵.
   Set the x-xx part of monitor *Ux-xx*. For example, to show monitor *U1-05*, set it to “105” as shown in this figure.

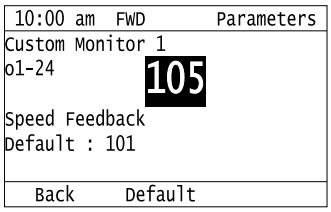

The configuration procedure is complete.

◆ Show Custom Monitors

The procedure in this section shows how to show the registered custom monitors.

1. Push F2 (Home) to show the HOME screen.

Note:
- When the drive is in HOME Mode, the screen shows [Home] in the upper right-hand corner of the screen.
- If the screen does not show [Home] for F2, push F1 (Back) to show [Home] for F2.

2. Push F2 (Menu).

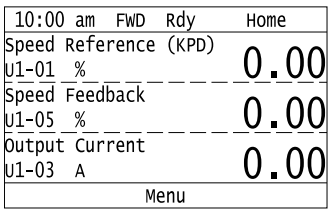

3. Push ▲ or ▼ to select [Monitors], then push ↵.

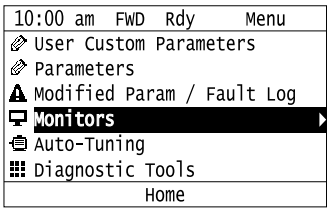

4. Push ▲ or ▼ to select [Custom Monitor], then push ↵.

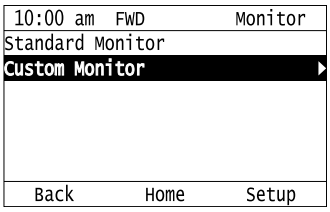

The keypad shows the selected monitor as shown in this figure.

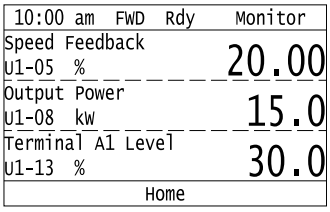

- When there are a minimum of two screens, push ▲ or ▼ to switch between screens.
- If you registered only one custom monitor to [Custom Monitor 1], the screen will show only one monitor. If you registered custom monitors only to [Custom Monitor 1] and [Custom Monitor 2], the screen will show only two monitors.

◆ Auto-Tuning the Drive

Auto-Tuning uses motor characteristics to automatically set drive parameters.

Refer to the motor nameplate or the motor test report for the necessary information for Auto-Tuning.

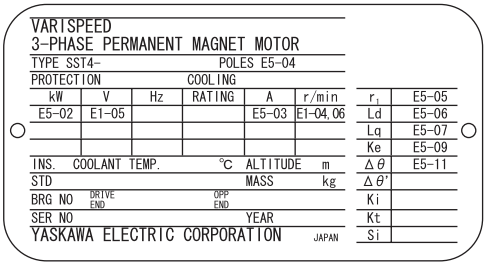

Figure 4.11 Motor Nameplate (Example)

⚠ WARNING Sudden Movement Hazard

Before you do Auto-Tuning, remove all personnel and objects from the area around the drive, motor, and load.
The drive and motor can start suddenly during Auto-Tuning and cause serious injury or death.

⚠ WARNING Electrical Shock Hazard

During Auto-Tuning, the motor will receive high voltage when the motor is stopped. Do not touch the motor until Auto-Tuning is complete.
If you touch a motor that is energized, it can cause serious injury or death.

⚠ WARNING Crush Hazard

Wire a sequence that will not let a multi-function output terminal open the holding brake during Stationary Auto-Tuning.
If the holding brake is open during Stationary Auto-Tuning, it can cause serious injury or death.

This procedure shows how to do Stationary Auto-Tuning.

1. Push F2 (Home) to show the HOME screen.

Note:
- When the drive is in HOME Mode, the screen shows [Home] in the upper right-hand corner of the screen.
- If the screen does not show [Home] for F2, push F1 (Back) to show [Home] for F2.

2. Push F2 (Menu).

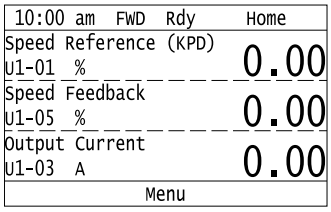

3. Push ^ or v to select [Auto-Tuning], then push ↵.

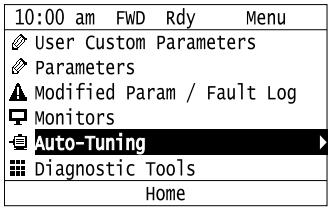

4. Push ↵.

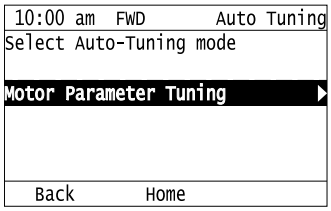

5. Push ^ or v to select [Stationary Auto-Tuning], then push ↵.

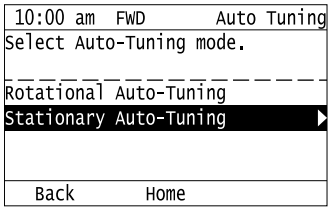

6. Follow the messages shown on the keypad to input the necessary Auto-Tuning data.

   Push < or > to select the digit, then push ^ or v to change the value. Push ↵ to save the change and move to the next entry field.

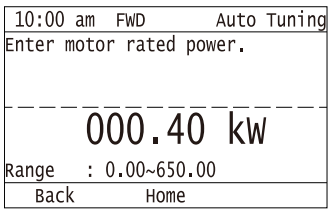

7. Follow the messages shown on the keypad to do the next steps.
8. When the keypad shows the Auto-Tuning start screen, push RUN.

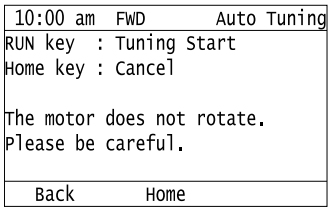

Auto-Tuning starts.

9. When the keypad shows this screen after Auto-Tuning is complete for 1 or 2 minutes, push ENTER or RIGHT.

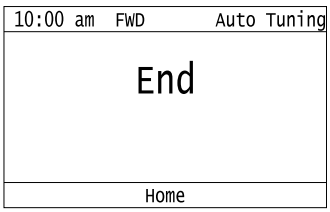

The keypad will show a list of the changed parameters as the result of Auto-Tuning.

10. Push UP or DOWN in the parameter change confirmation screen to check the changed parameters, then select [Auto-Tuning Successful] at the bottom of the screen and push ENTER.

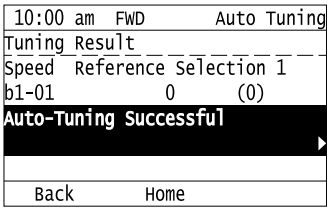

To change a parameter again, push UP or DOWN to select the parameter to change, then push ENTER to show the parameter setting screen.

Auto-Tuning is complete.

Note:

If the drive detects an error or you push STOP before Auto-Tuning is complete, Auto-Tuning will stop and the keypad will show an error code. *Endx* identifies that Auto-Tuning was successful with calculation errors. Find and repair the cause of the error and do Auto-Tuning again, or set the motor parameters manually. You can use the drive in the application if you cannot find the cause of the *Endx* error. *Er-xx* identifies that Auto-Tuning was not successful. Find and repair the cause of the error and do Auto-Tuning again.

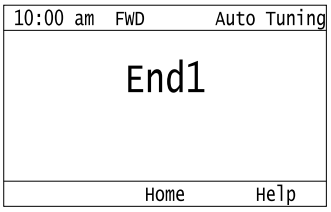

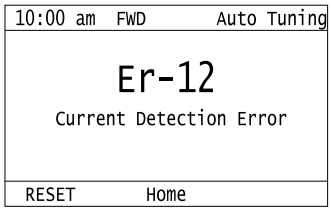

◆ Start Data Logging

The data log function saves drive status information. Monitors *Ux-xx* are the source of log information. The procedure in this section shows how to start logging data.

You can record a maximum of 10 monitors.

1. Make sure that there is a microSD card in the keypad.
2. Push F2 (Home) to show the HOME screen.

Note:
- When the drive is in HOME Mode, the screen shows [Home] in the upper right-hand corner of the screen.
- If the screen does not show [Home] for F2, push F1 (Back) to show [Home] for F2.

3. Push F2 (Menu).

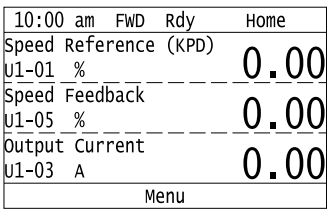

4. Push ▲ or ▼ to select [Diagnostic Tools], then push ↵.

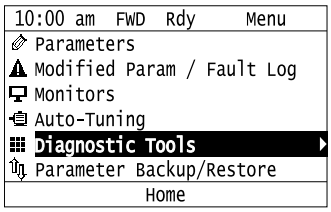

5. Push ▲ or ▼ to select [Data Logger], then push ↵.

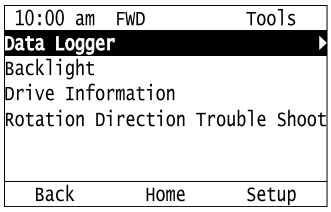

6. Push ▲ or ▼ to select [Yes] or [No], then push ↵.

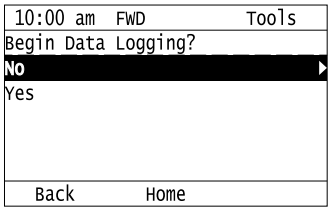

- [Yes]: Data logging starts.
- [No]: Data logging will not start.

If the drive was logging data when you entered the command, the keypad look like this:

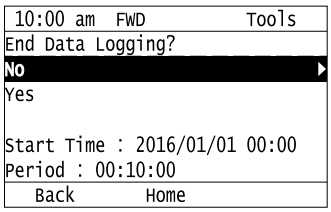

◆ Configuring the Data Log Content

■ Set Monitor to Log

The procedure in this section shows how to set the monitor for which to log data.

1. Push F2 (Home) to show the HOME screen.

Note:
- When the drive is in HOME Mode, the screen shows [Home] in the upper right-hand corner of the screen.
- If the screen does not show [Home] for F2, push F1 (Back) to show [Home] for F2.

2. Push F2 (Menu).

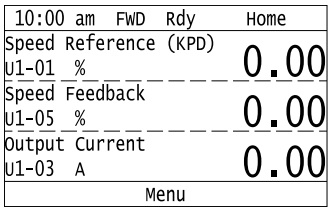

3. Push ▲ or ▼ to select [Diagnostic Tools], then push ↵.

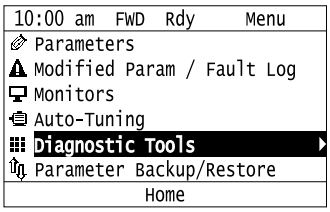

4. Push ▲ or ▼ to select [Data Logger], then push F3 (Setup).

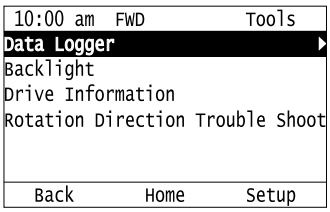

5. Push ▲ or ▼ to select [Log Monitor], then push ↵.

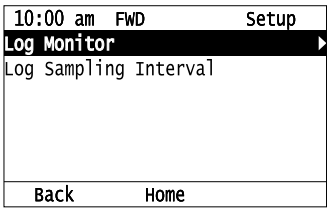

6. Push ▲ or ▼ to select the save-destination monitor parameter, then push ↵.

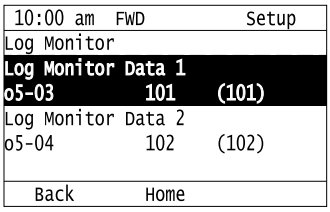

7. Push ▲ or ▼ to select the monitor number to be logged, then push ↵.

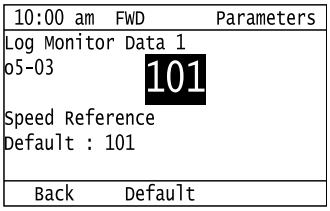

The configuration procedure is complete.

■ Set the Sampling Time

The procedure in this section shows how to set the sampling time for data logging.

1. Push F2 (Home) to show the HOME screen.

Note:
- When the drive is in HOME Mode, the screen shows [Home] in the upper right-hand corner of the screen.
- If the screen does not show [Home] for F2, push F1 (Back) to show [Home] for F2.

2. Push F2 (Menu).

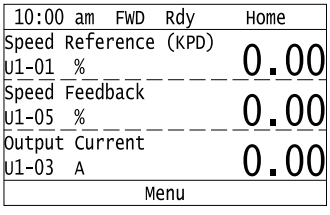

3. Push ▲ or ▼ to select [Diagnostic Tools], then push ↵.

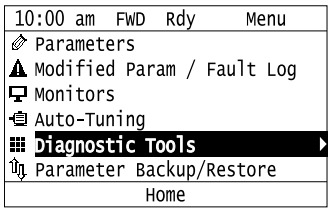

4. Push ▲ or ▼ to select [Data Logger], then push F3 (Setup).

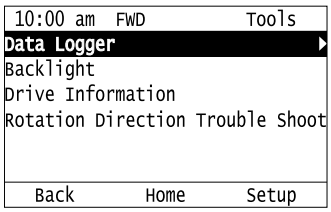

5. Push ▲ or ▼ to select [Log Sampling Interval], then push ↵.

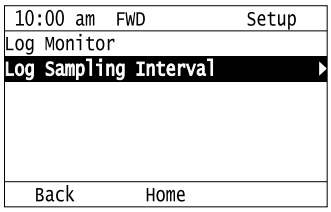

6. Push ◀ or ▶ to select the digit, then push ▲ or ▼ to change the value.

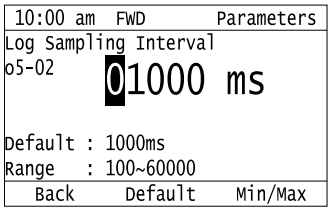

7. When you complete changing the value, push ↵.

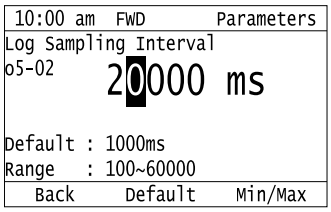

The procedure to set the sampling time is complete.

◆ Set Backlight to Automatically Turn OFF

You can set the backlight of the keypad screen to automatically turn OFF after a set length of time since the last key operation on the keypad. The procedure in this section shows how to turn ON and turn OFF the backlight.

1. Push F2 (Home) to show the HOME screen.

Note:
- When the drive is in HOME Mode, the screen shows [Home] in the upper right-hand corner of the screen.
- If the screen does not show [Home] for F2, push F1 (Back) to show [Home] for F2.

2. Push F2 (Menu).

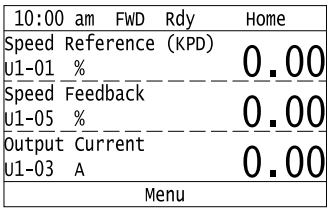

3. Push ▲ or ▼ to select [Diagnostic Tools], then push ↵.

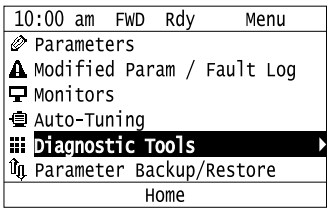

4. Push ▲ or ▼ to select [Backlight], then push ↵.

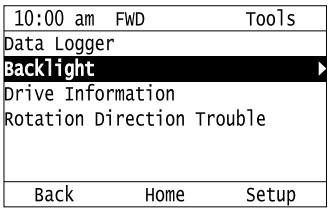

5. Push ▲ or ▼ to select [ON] or [OFF], then push ↵.

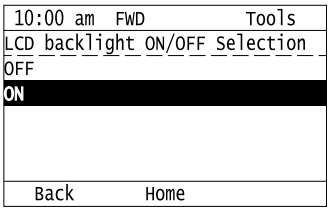

- [ON]: Backlight is always ON
- [OFF]: Backlight turns OFF after set length of time.

6. Push F3 (Setup).

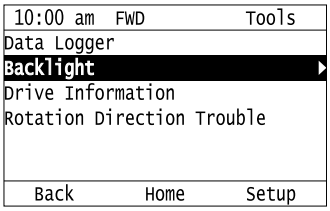

7. Push ↵.

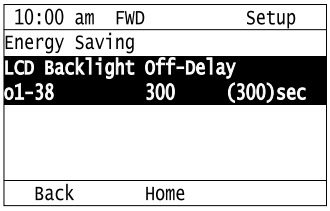

8. Push < or > to select the digit, then push ^ or v to change the value.

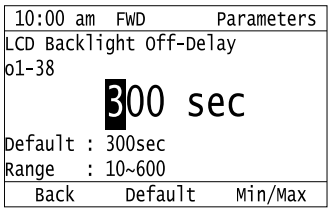

9. When you are done changing the value, push Enter.

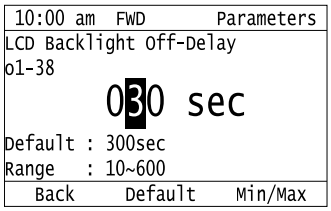

The procedure to set the backlight to turn OFF automatically is complete.

◆ Show Information about the Drive

The procedure in this section shows how to show the drive model, maximum applicable motor output, continuous rated output current, software version, and the serial number on the keypad.

1. Push F2 (Home) to show the HOME screen.

Note:
- When the drive is in HOME Mode, the screen shows [Home] in the upper right-hand corner of the screen.
- If the screen does not show [Home] for F2, push F1 (Back) to show [Home] for F2.

2. Push F2 (Menu).

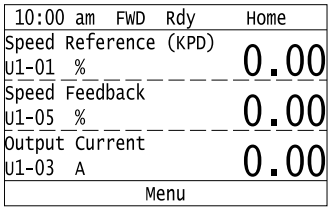

3. Push ^ or v to select [Diagnostic Tools], then push Enter.

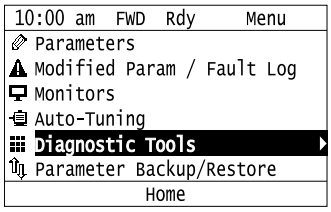

4. Push ^ or v to select [Drive Information], then push Enter.

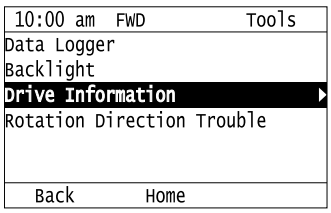

The keypad will show the drive information.

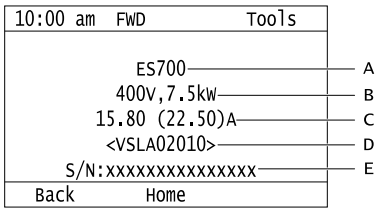

A - Drive series
B - Maximum applicable motor output
C - Continuous rated output current and 50% ED output current
D - Drive software version
E - Serial number

◆ Save a Backup of Parameters

You can save a backup of the drive parameters to the keypad. The keypad can store parameter setting values for a maximum of four drives in different storage areas. Backups of the parameter settings can save time when you set parameters after you replace a drive. When you set up more than one drive, you can copy the parameter settings from a drive that completed a test run to the other drives.

Note:
- Stop the motor before you back up parameters.
- The drive will not accept an Up/Down command while it makes a backup.

1. Push F2 (Home) to show the HOME screen.

Note:
- When the drive is in HOME Mode, the screen shows [Home] in the upper right-hand corner of the screen.
- If the screen does not show [Home] for F2, push F1 (Back) to show [Home] for F2.

2. Push F2 (Menu).

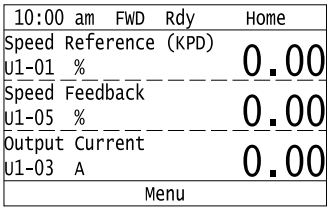

3. Push ▲ or ▼ to select [Parameter Backup/Restore], then push ↵.

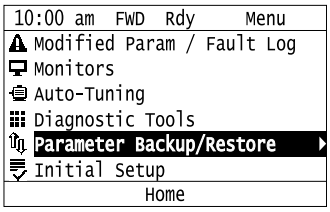

4. Push ▲ or ▼ to select the items to back up, then push ↵.

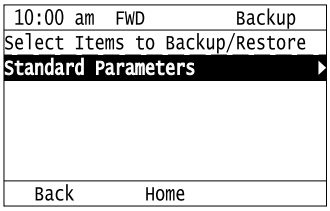

5. Push ▲ or ▼ to select [Backup (drive → keypad)], then push ↵.

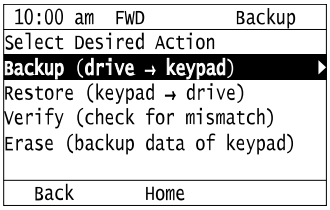

6. Push ▲ or ▼ to select a memory location, then push ↵.

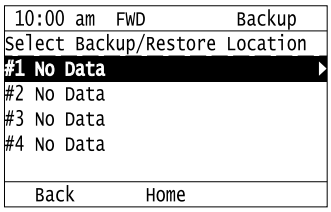

The keypad shows “End” when the backup procedure completes successfully.

◆ Write Backed-up Parameters to the Drive

You can back up parameters on the keypad and write them to different drives.

Note:
- Always stop the drive before you start to restore the parameter backups.
- While you restore parameters, the drive will not accept an Up/Down command.

1. Push F2 (Home) to show the HOME screen.

Note:
- When the drive is in HOME Mode, the screen shows [Home] in the upper right-hand corner of the screen.
- If the screen does not show [Home] for F2, push F1 (Back) to show [Home] for F2.

2. Push F2 (Menu).

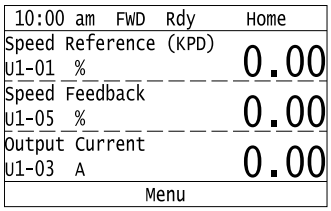

3. Push ▲ or ▼ to select [Parameter Backup/Restore], then push ↵.

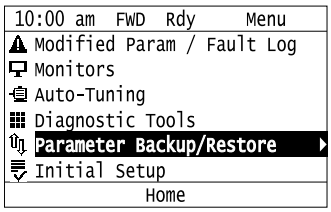

4. Push ▲ or ▼ to select the item to restore, then push ↵.

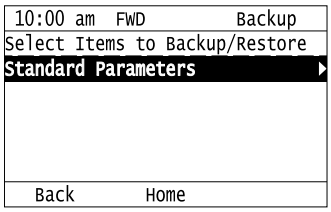

5. Push ▲ or ▼ to select [Restore (keypad → drive)], then push ↵.

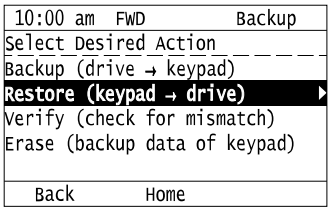

6. Push ▲ or ▼ to select the backed-up parameter data, then push ENTER.

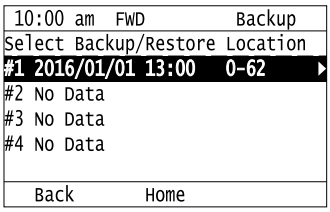

The keypad will show the "End" message when the write process is complete.

Note:
The keypad display changes when the settings and conditions change.

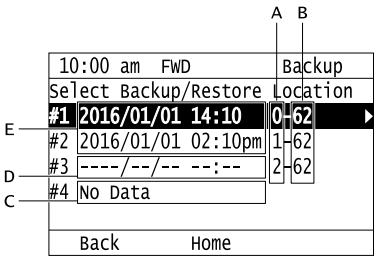

A - *A1-02 [Control Method Selection]* settings
B - *o2-04 [Drive Model (KVA) Selection]* settings (2 or 3 digits)
C - Parameter backup data is not registered
D - Backup data does not contain the date Information
E - Backup date

◆ Verify Keypad Parameters and Drive Parameters

This procedure makes sure that the parameter setting values that you backed up in the keypad agree with the parameter setting values in the drive.

Note:
- Always stop the drive before you start to verify the parameters.
- While you verify parameters, the drive will not accept an Up/Down command.

1. Push F2 (Home) to show the HOME screen.

Note:
- When the drive is in HOME Mode, the screen shows [Home] in the upper right-hand corner of the screen.
- If the screen does not show [Home] for F2, push F1 (Back) to show [Home] for F2.

2. Push F2 (Menu).

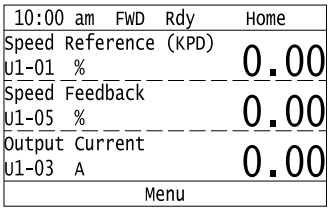

3. Push ▲ or ▼ to select [Parameter Backup/Restore], then push ENTER.

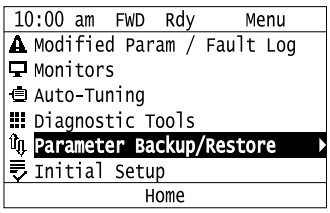

4. Push ▲ or ▼ to select the item to verify, then push ↵.

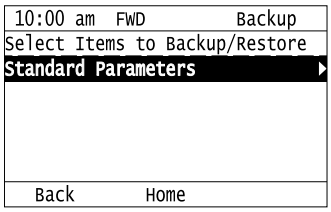

5. Push ▲ or ▼ to select [Verify (drive → keypad)], then push ↵.

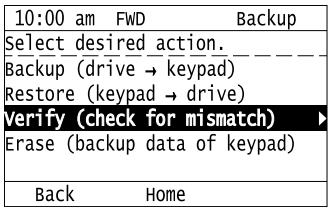

6. Push ▲ or ▼ to select the data to verify, then push ↵.

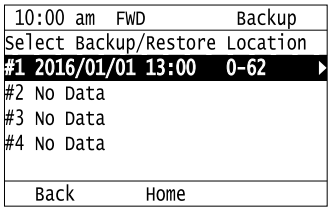

The keypad shows “End” when the parameter settings backed up in the keypad align with the parameter settings copied to the drive.

Note:

The keypad shows *vFyE [Parameters do not Match]* when the parameter settings backed up in the keypad do not align with the parameter settings copied to the drive. Push one of the keys to return to the screen in Step 6.

◆ Delete Parameters Backed Up to the Keypad

This procedure deletes the parameters that you backed up to the keypad.

1. Push F2 (Home) to show the HOME screen.

Note:

- When the drive is in HOME Mode, the screen shows [Home] in the upper right-hand corner of the screen.
- If the screen does not show [Home] for F2, push F1 (Back) to show [Home] for F2.

2. Push F2 (Menu).

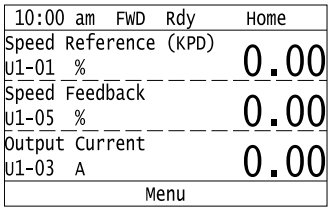

3. Push ▲ or ▼ to select [Parameter Backup/Restore], then push ↵.

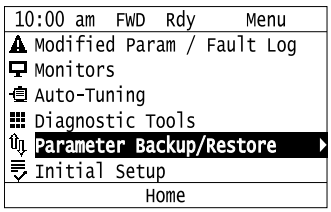

4. Push ▲ or ▼ to select the item to delete, then push ↵.

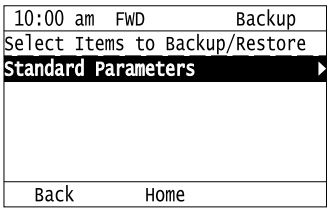

5. Push ▲ or ▼ to select [Erase (backup data of keypad)], then push ↵.

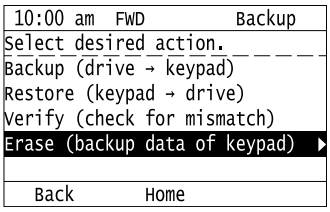

6. Push ▲ or ▼ to select the data to delete, then push ↵.

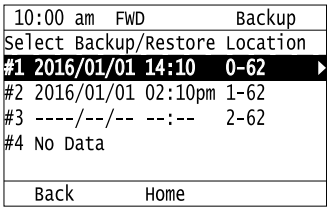

The keypad will show the "End" message when the write process is complete.

◆ Set the Keypad Language Display

The procedure in this section shows how to set the language shown on the keypad.

1. Push F2 (Home) to show the HOME screen.

Note:
- When the drive is in HOME Mode, the screen shows [Home] in the upper right-hand corner of the screen.
- If the screen does not show [Home] for F2, push F1 (Back) to show [Home] for F2.

2. Push F2 (Menu).

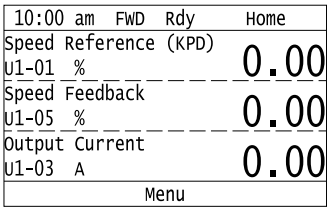

3. Push ▲ or ▼ to select [Initial Setup], then push ↵.

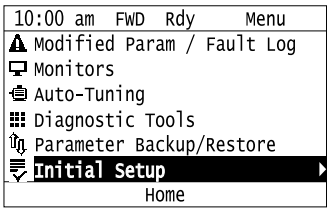

4. Push ▲ or ▼ to select [Language Selection], then push Enter.

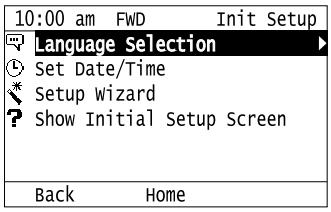

5. Push ▲ or ▼ to select the language, then push Enter.

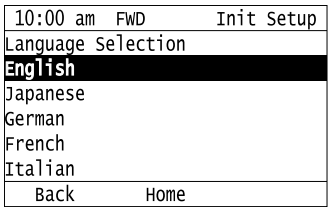

The procedure to set the keypad language is complete.

◆ Set the Date and Time

The procedure in this section shows how to set the date and time.

Note:
- Refer to *Replace the Keypad Battery on page 390* for information about the battery installation procedure.
  To set the drive to detect an alarm when the battery is dead or when the clock is not set, install the battery then set *o4-24 = 1 [bAT Detection Selection = Enable (Alarm Detected)]*.
- If the keypad does not have a clock battery, you must set the date and time each time you energize the drive.

1. Push F2 (Home) to show the HOME screen.

Note:
- When the drive is in HOME Mode, the screen shows [Home] in the upper right-hand corner of the screen.
- If the screen does not show [Home] for F2, push F1 (Back) to show [Home] for F2.

2. Push F2 (Menu).

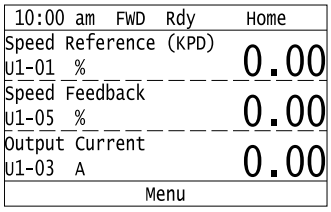

3. Push ▲ or ▼ to select [Initial Setup], then push Enter.

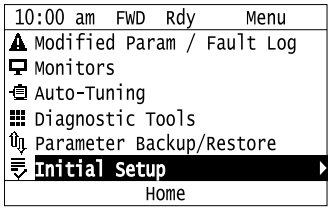

4. Push ▲ or ▼ to select [Set Date/Time], and push Enter.

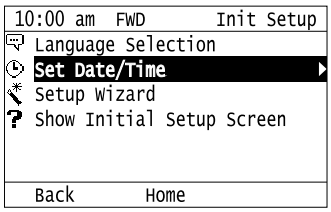

5. Push ▲ or ▼ to select the format of date display, then push ↵.

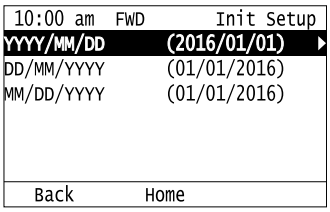

6. Push ▲ or ▼ to select the format of time display, then push ↵.

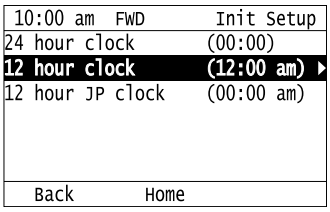

7. Push ◀ or ▶ to select the Year/Month/Day, then push ▲ or ▼ to change the value.

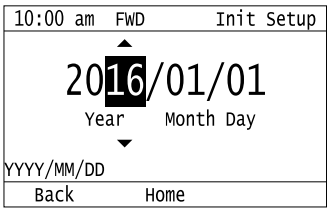

8. When you are done changing the value, push ↵.

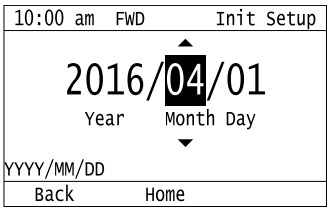

9. Push ◀ or ▶ to select the hour or minute, then push ▲ or ▼ to change the value.

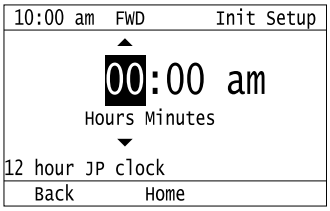

10. When you are done setting the time, push ↵.

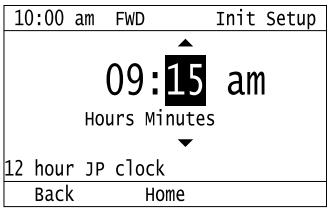

The procedure for setting the date and time is complete.

◆ Set Parameters Using the Setup Wizard

The Setup Wizard lets you follow simple messages on the keypad to set these basic functions:

- Motor type
- Control method
- Speed reference source

- Up/Down command source
- Display units
- Length units
- Traction sheave diameter
- Roping ratio
- Mechanical gear ratio
- Speed reference selection mode
- Speed reference parameters
- Acceleration/deceleration ramps
- Short Circuit Braking function
- Brake Response Monitoring function
- Rescue Operation
- Light Load Direction Search function

At the end of the Wizard, you have the option to do Auto-Tuning.

If there is an invalid setting while you progress through the Wizard, ALM will temporarily flash. However, when all settings are consistent at the end of the Wizard, ALM will go off. If the inconsistency remains, the keypad will show a dedicated error after you leave the Wizard.

Note:

- You can push F2 (Home) to quit the Setup Wizard at any time. You can also select whether the drive keeps the parameter changes before you quit the Setup Wizard.
- If the drive loses power during the Setup Wizard, the drive will keep the parameter changes.

1. Push F2 (Home) to show the HOME screen.

Note:

- When the drive is in HOME Mode, the screen shows [Home] in the upper right-hand corner of the screen.
- If the screen does not show [Home] for F2, push F1 (Back) to show [Home] for F2.

2. Push F2 (Menu).

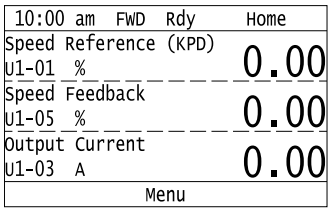

3. Push ^ or v to select [Initial Setup], then push ↵.

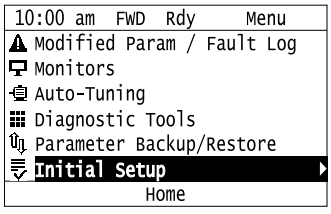

4. Push ^ or v to select [Setup Wizard], then push ↵.

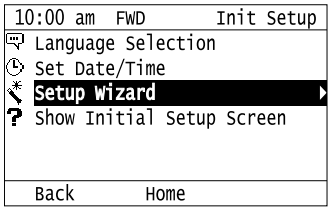

5. Push ▲ or ▼ to select [Modify] or [Initialize], then push ↵.

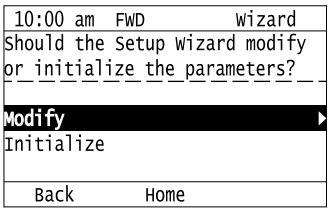

- When you select [Modify], the drive will not do an initialization before it applies the Setup Wizard settings to the parameters.
- When you select [Initialize], the drive will do a 2-wire initialization to reset all parameters to default settings before it applies the Setup Wizard settings to the parameters. This is the same operation as when you set *A1-03 = 2220 [Initialize Parameters = 2-Wire Initialization]*.

6. For the next steps, follow the instructions shown on the keypad until you see this screen:

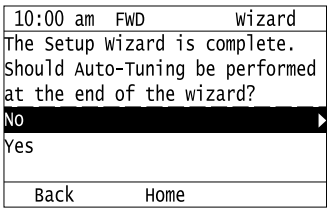

7. Push ▲ or ▼ to select [Yes] or [No], then push ↵.
   - When you select [No], the Wizard exits to the HOME screen.
   - When you select [Yes], the drive lets you select the Auto-Tuning menu directly from the Wizard.

Note:
When you apply a terminal function to a terminal, the drive sets all other terminal function selection parameters with the same function to *F [Not Used]* to avoid *oPExx* errors.

The Setup Wizard procedure is complete.

◆ Disable the Initial Setup Screen

Do the steps in this procedure to not show the Initial Setup Screen when the drive is energized.

1. Push F2 (Home) to show the HOME screen.

Note:
• When the drive is in HOME Mode, the screen shows [Home] in the upper right-hand corner of the screen.
• If the screen does not show [Home] for F2, push F1 (Back) to show [Home] for F2.

2. Push F2 (Menu).

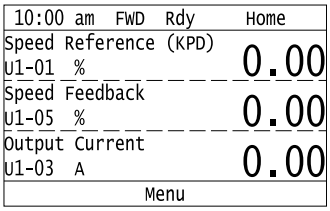

3. Push ▲ or ▼ to select [Initial Setup], then push ↵.

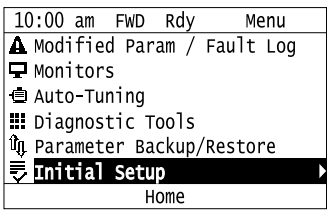

4. Push / to select [Show Initial Setup Screen], then push .

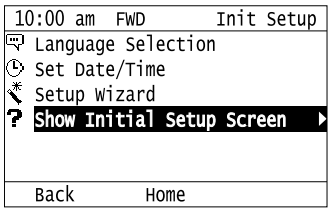

5. Push / to select [No], then push .

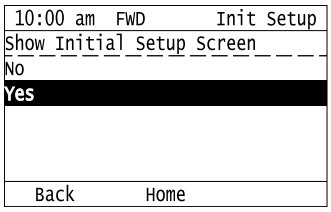

- [No]: The keypad will not show the Initial Setup Screen when the drive is energized.
- [Yes]: The keypad will show the Initial Setup Screen when the drive is energized.

◆ Write Automatically Backed-up Parameters to the Drive

You can automatically back up parameters to the keypad connected to the drive and write those parameters to a drive from the same drive series as specified by the settings of *o3-06 [Auto Parameter Backup Selection]* and *o3-07 [Auto Parameter Backup Interval]*.

Note:
- Set *o3-06 = 1 [Auto Parameter Backup Selection = Enabled]* in each drive to which you will write the parameters.
- This operation is not available when the parameters in the keypad and the parameters on the other drives are set to the same values.

1. Connect the keypad to the drive.
2. Push or to select [Yes], then push .

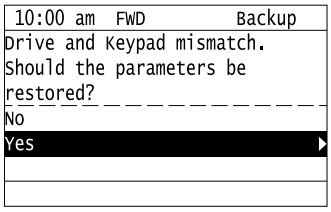

3. Push or to select [Yes], then push .

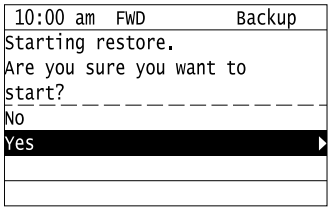

The keypad will show the “End” message when the write process is complete.

4.7 Auto-Tuning

Auto-Tuning uses motor characteristics to automatically set drive parameters for vector control. Think about the type of motor, drive control method, and the motor installation environment and select the best Auto-Tuning method.

The keypad will show the messages with prompts to input the necessary parameter information. These prompts are specified by the selected Auto-Tuning method and the control method setting in *A1-02*.

◆ Auto-Tuning for Induction Motors

This section gives information about Auto-Tuning for induction motors. Auto-Tuning sets these parameters:

- Motor parameters *E1-xx, E2-xx* (*E3-xx, E4-xx* for motor 2)
- Speed feedback detection-use *F1-xx* (only with CLV)

Note:

Do Stationary Auto-Tuning if you cannot do Rotational Auto-Tuning. There can be large differences between the measured results and the motor characteristics when Auto-Tuning is complete. Examine the parameters for the measured motor characteristics after you do Stationary Auto-Tuning.

Table 4.5 Types of Auto-Tuning for Induction Motors

Mode	Parameter Settings	Application Conditions and Benefits	Applicable Control Method (A1-02 Setting)		
			V/f (0)	OLV (2)	CLV (3)
Rotational Auto-Tuning	T1-01 = 0	• When you can decouple the motor and load and the motor can rotate freely while Auto-Tuning. • When operating motors that have fixed output characteristics. • When it is necessary to use motors that have high-precision control. • When you cannot decouple the motor and load, but the motor load is less than 30%.	x	x	x
Stationary Auto-Tuning 1	T1-01 = 1	• When you cannot decouple the motor and load, but the motor load is more than 30%. • When the information from the motor test report or motor nameplate is not available. With Stationary Auto-Tuning, the energized drive stays stopped for approximately 1 minute. During this time, the drive automatically measures the necessary motor parameters. • When operating the motor with a light load after Auto-Tuning. The drive can automatically calculate the motor parameter settings necessary for torque control. Set *T1-12 = 1 [Test Mode Selection = Yes]* to do a test run after Auto-Tuning.	-	x	x
Stationary Line-Line Resistance	T1-01 = 2	When the motor output and drive capacity are different.	x	x	x

■ Input Data for Induction Motor Auto-Tuning

To do Auto-Tuning, input data for the items in Table 4.6 that have an “x”. Before you start Auto-Tuning, prepare the motor test report or record the information from the motor nameplate as a reference.

Table 4.6 Input Data for Induction Motor Auto-Tuning

Input Data	Parameter	Unit	Auto-Tuning Mode (T1-01 Setting)		
			Rotational Auto-Tuning (0)	Stationary Auto-Tuning 1 (1)	Stationary Line-Line Resistance (2)
Motor Rated Power	T1-02	kW	x	x	x
Motor Rated Voltage	T1-03	V	x	x	-
Motor Rated Current	T1-04	A	x	x	x
Motor Base Frequency	T1-05	Hz	x	x	-
Number of Motor Poles	T1-06	-	x	x	-
Motor Base Speed	T1-07	min^{-1}	x	x	-
Encoder Pulse Count (PPR)	T1-08	-	x *1	x *1	-
Motor No-Load Current	T1-09	A	-	x	-

Input Data	Parameter	Unit	Auto-Tuning Mode (T1-01 Setting)		
			Rotational Auto-Tuning (0)	Stationary Auto-Tuning 1 (1)	Stationary Line-Line Resistance (2)
Motor Rated Slip Frequency	T1-10	Hz	-	x *2	-
Test Mode Selection *4	T1-12	-	-	x *5	-
No-Load Voltage	T1-13	V	x *6	x *6	-

*1 Input this value when *A1-02 = 3 [Control Method Selection = Closed Loop Vector]*.
*2 Shows 0 Hz as the default value. If you do not know the Motor Rated Slip Frequency, keep the setting at 0 Hz.
*3 Input this value when *A1-02 = 0 [V/f Control]*.
*4 When *T1-12 = 1 [Test Mode Selection = Yes]* and you run the motor in Drive Mode for the first time after Auto-Tuning, the drive will automatically set *E2-02 [Motor Rated Slip]* and *E2-03 [Motor No-Load Current]*.
*5 Input this value when *T1-10 [Motor Rated Slip Frequency]* = 0 Hz.
*6 Set the same value to No-Load Voltage as *T1-03 [Motor Rated Voltage]* to get the same characteristics using Yaskawa 1000-Series drives or other legacy models.

◆ Auto-Tuning for Motor Parameters for PM Motor

This section gives information about Auto-Tuning for PM motors. Auto-Tuning sets these parameters:

- Motor parameters *E1-xx, E5-xx*
- Speed feedback detection uses *F1-xx* (only with CLV/PM)

Table 4.7 Auto-Tuning for PM Motors

Mode	Parameter Settings	Application Conditions and Benefits	Applicable Control Method (A1-02 Setting)
			CLV/PM (7)
PM Motor Parameter Settings	T2-01 = 0	• When the information from the motor test report or motor nameplate is available. • After the parameter setting is complete, the drive will energize the motor and do Initial Pole Position Detection Tuning and Encoder Tuning. Connect the motor to the drive and manually input the necessary motor parameters to use this method.	x
PM Stationary Auto-Tuning	T2-01 = 1	When the information from the motor test report or motor nameplate is not available. **Note:** When you do Stationary Auto-Tuning, the motor brake should be closed. With Stationary Auto-Tuning, the energized drive stays stopped for approximately 1 minute. During this time, the drive automatically measures the necessary motor parameters. After Stationary Auto-Tuning is complete, do a test run.	x
Encoder Tuning	T2-01 = 3	• When the Auto-Tuning for PG-E3 characteristics is necessary. • When you replace the encoder.	x
PM Rotational Auto-Tuning	T2-01 = 4	• When you can decouple the motor and load and the motor can rotate freely while Auto-Tuning. • When you want to improve the accuracy of back-EMF and Encoder Offset value. • The drive will automatically set the values measured during Auto-Tuning to the motor parameters. **Note:** After Stationary Auto-Tuning is complete, do Rotational Auto-Tuning.	x

■ Input Data for PM Motor Auto-Tuning

To do Auto-Tuning, input data for the items in Table 4.8 that have an “x”. Before you start Auto-Tuning, prepare the motor test report or record the information from the motor nameplate as a reference.

Table 4.8 Input Data for PM Motor Auto-Tuning

Input Data	Parameter	Unit	Auto-Tuning Mode (T2-01 Setting)			
			PM Motor Parameter Settings (0)	PM Stationary Auto-Tuning (1)	Encoder Tuning (3)	PM Rotational Auto-Tuning (4)
Control Method Selection	**A1-02**	**-**	**7**			
PM Motor Rated Power	T2-04	kW	x	x	-	x
PM Motor Rated Voltage	T2-05	V	x	x	-	x
PM Motor Rated Current	T2-06	A	x	x	-	x
Number of PM Motor Poles	T2-08	-	x	x	-	x
PM Motor Base Speed	T2-09	min^{-1}	x	x	-	x
PM Motor Stator Resistance	T2-10	Ω	x	-	-	-
PM Motor d-Axis Inductance	T2-11	mH	x	-	-	-
PM Motor q-Axis Inductance	T2-12	mH	x	-	-	-
Back-EMF Units Selection	T2-13	-	x	-	-	-
Back-EMF Voltage Constant (Ke)	T2-14	*1*	x	-	-	-
Pull-In Current Level	T2-15	%	-	-	-	-
Encoder Pulse Count (PPR)	T2-16	-	*2*	*2*	-	x
Encoder Z-Pulse Offset for PM Motor	T2-17	Degrees	*2*	*2*	-	-

*1 Changes when the value set in *T2-13* changes.
*2 Input this value when *A1-02 = 7 [Control Method Selection = PM Closed Loop Vector Control]*.

◆ Precautions before Auto-Tuning

Examine the topics in this section before you start Auto-Tuning.

■ Prepare for Basic Auto-Tuning

- You must input data from the motor nameplate or motor test report to do Auto-Tuning. Make sure that this data is available before you do Auto-Tuning.
- For best performance, make sure that the drive input supply voltage is equal to or more than the motor rated voltage.

  Note:
  Better performance is possible when you use a motor with a rated voltage that is less than the input supply voltage (by 20 V for 200 V class models or by 40 V for 400 V class models). This is very important when you operate the motor at more than 90% of base speed, where high torque precision is necessary. If the input power supply is equal to the motor rated voltage, the drive output voltage will not be sufficient and performance will decrease.

- Push STOP on the keypad to cancel Auto-Tuning.
- If a Safe Disable input signal is input to the drive during Auto-Tuning, Auto-Tuning measurements will not complete successfully. If this occurs, cancel Auto-Tuning, then do it again.
- Table 4.9 shows the status of multi-function input/output terminals during Auto-Tuning.

Table 4.9 Status of Input/Output Terminals during Auto-Tuning

Auto-Tuning Type	Mode		Multi-Function Input	Digital Output
Induction Motor Auto-Tuning	Rotational	Rotational Auto-Tuning	Disabled	Functions the same as during usual operation.
	Stationary	Stationary Auto-Tuning 1	Disabled	Keeps the status at the start of Auto-Tuning.
		Line-to-Line Resistance	Disabled	Keeps the status at the start of Auto-Tuning.
PM Motor Auto-Tuning	Rotational	PM Rotational Auto-Tuning	Disabled	Functions the same as during usual operation.
	Stationary	Manual Entry w/ Motor Data Sheet	Disabled	Keeps the status at the start of Auto-Tuning.
		PM Stationary Auto-Tuning	Disabled	Keeps the status at the start of Auto-Tuning.
		Encoder Tuning	Disabled	Keeps the status at the start of Auto-Tuning.

⚠ WARNING Crush Hazard
Wire a sequence that will not let a multi-function output terminal open the holding brake during Stationary Auto-Tuning.
If the holding brake is open during Stationary Auto-Tuning, it can cause serious injury or death.

⚠ WARNING Sudden Movement Hazard
Before you do Rotational Auto-Tuning, disconnect the load from the motor.
The load can move suddenly and cause serious injury or death.

⚠ WARNING Injury to Personnel
Rotational Auto-Tuning rotates the motor at 50% or more of the motor rated frequency. Make sure that there are no issues related to safety in the area around the drive and motor.
Increased motor frequency can cause serious injury or death.

⚠ WARNING Electrical Shock Hazard
During Auto-Tuning, the motor will receive high voltage when the motor is stopped. Do not touch the motor until Auto-Tuning is complete.
If you touch a motor that is energized, it can cause serious injury or death.

■ Precautions before Rotational Auto-Tuning

⚠ WARNING Electrical Shock Hazard
During Auto-Tuning, the motor will receive high voltage when the motor is stopped. Do not touch the motor until Auto-Tuning is complete.
If you touch a motor that is energized, it can cause serious injury or death.

- Before you do Rotational Auto-Tuning to prevent drive malfunction, uncouple the motor from the load. If you do Rotational Auto-Tuning with the motor connected to a load that is more than 30% of the motor duty rating (remove ropes), the drive will not correctly calculate the motor parameters and the motor can operate incorrectly.
- When the load is 30% or less of the motor duty rating, you can do Auto-Tuning with the motor connected to a load.
- Make sure that the motor mechanical brake is released.
- Make sure that external force from the machine will not cause the motor to rotate.

■ Precautions before Stationary Auto-Tuning

- Make sure that the motor mechanical brake is not open.
- Make sure that external force from the machine will not cause the motor to rotate.

⚠ WARNING Electrical Shock Hazard
During Auto-Tuning, the motor will receive high voltage when the motor is stopped. Do not touch the motor until Auto-Tuning is complete.
If you touch a motor that is energized, it can cause serious injury or death.

Automatically Set E2-02 [Motor Rated Slip] and E2-03 [Motor No-Load Current]

When *T1-12 = 1 [Test Mode Selection = Yes]* and you run the motor in Drive Mode for the first time after Stationary Auto-Tuning, the drive will automatically set *E2-02 [Motor Rated Slip]* and *E2-03 [Motor No-Load Current]*.

After Stationary Auto-Tuning is complete, use this procedures to do the operation in test mode:

1. Check the *E2-02* and *E2-03* values on the "Modified Parameters/Fault Log" screen or the "Parameters" screen.
2. Operate the motor in Drive Mode with these conditions:
   - Make sure that you connect all wiring between the drive and motor
   - Make sure that a mechanical brake on the motor shaft is not locked
   - The maximum motor load must be 30% of the rated load.
   - Keep a constant speed of 30% of *E1-06 [Base Frequency]* (default setting = maximum frequency) or more for 1 second or longer.
3. After the motor stops, check the *E2-02* and *E2-03* values on the "Modified Parameters/Fault Log" screen or the "Parameters" screen again.
4. Make sure that the input data is correct.
   When the settings in *E2-02* and *E2-03* are different than in step 1, the drive set the values automatically.

Note:

- If you cannot operate the motor with the conditions in step 2 for the first test run and if the values set in *E2-02* and *E2-03* are much different than data in the official test report for the motor and the data listed in *Defaults by Drive Model on page 507*, these problems can occur:
  – Motor vibrations or hunting
  – Not sufficient torque
  – Overcurrent

  In elevator applications, there is a risk of the cage falling and causing personal injury.
  Do one of these precautions to decrease the risk:
  – After doing Stationary Auto-Tuning, operate the drive as specified by the conditions and procedure above.
  – Set *T1-12 = 0 [Test Mode Selection = No]*.
  – Do Rotational Auto-Tuning.
- If you initialize the drive after completing Step 1, do the procedure beginning from Step 1 again.
- For general-purpose motors, the target value for *E2-02* is 1 Hz to 3 Hz, and the target rated current for *E2-03* is 30% to 65%. Larger capacity motors have a lower rated slip, and a smaller ratio for the no-load current rated current. Refer to *Defaults by Drive Model on page 507*.

■ Precautions before Stationary Auto-Tuning for Line-to-Line Resistance and Stator Resistance Auto-Tuning

In V/f control, when the motor output and drive capacity do not align, do Stationary Auto-Tuning for Line-to-Line Resistance.

⚠ WARNING Electrical Shock Hazard
During Auto-Tuning, the motor will receive high voltage when the motor is stopped. Do not touch the motor until Auto-Tuning is complete.
If you touch a motor that is energized, it can cause serious injury or death.

◆ Rotation Direction Trouble Shoot Function

The Rotation Direction Trouble Shoot function helps to solve these motor rotation problems that can occur in the test run:

- There is current flow, but no motor rotation.
- The drive detects a *dv3 [Inversion Detection]*, *dv4 [Inversion Prevention Detection]*, *oL2 [Drive Overload]*, or *PGo [Encoder (PG) Feedback Loss]* fault.
- The motor rotates in a different direction than expected.
- The current does not flow to the motor.
- The motor does not start to rotate.

Note:

This function is not available with the LED keypad.

If the motor does not rotate and the drive detects a *dv3*, *dv4*, *oL2*, or *PGo* fault in the test run, do these steps, then make sure that the drive can operate the motor at approximately 10% speed in the correct rotation direction.

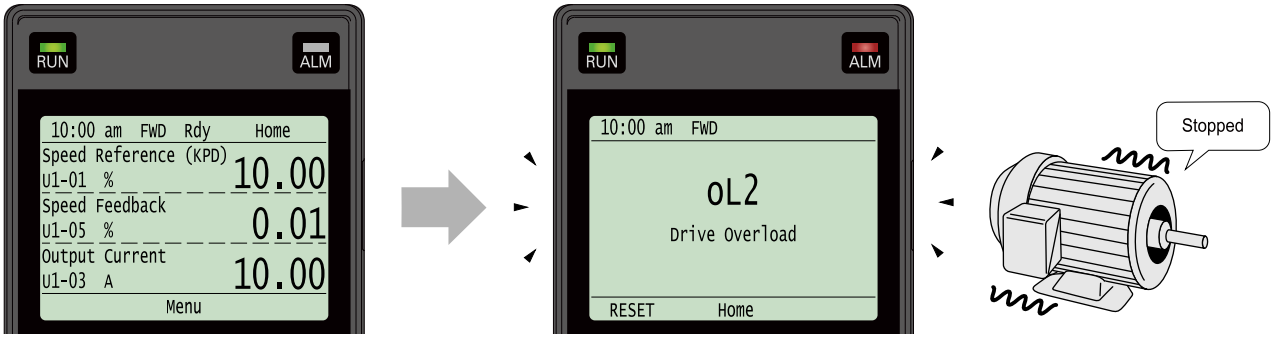

1. Show the HOME screen.
2. Push F2 (Menu).
3. Push ^ or v to select [Diagnostic Tools], then push ↵.
4. Push ^ or v to select [Rotation Direction Trouble Shoot], then push ↵.
5. Select [Not run correctly, faults occur], then push ↵.
6. Select [Execute trouble shoot], then push ↵.

If the motor rotates in a different direction than expected, do these steps, then make sure that the drive can operate the motor at approximately 10% speed in the correct rotation direction.

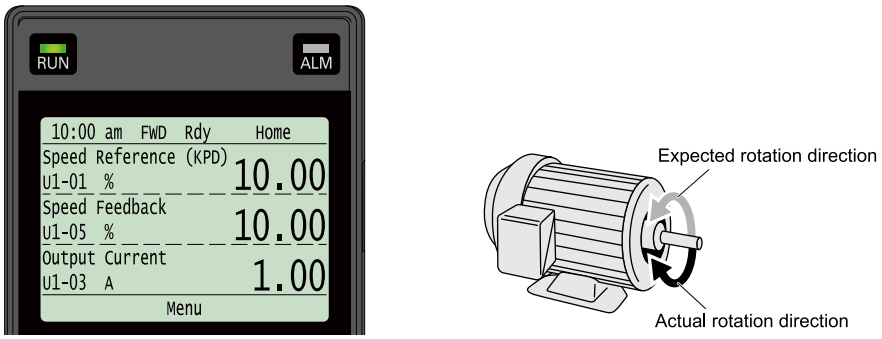

1. Show the HOME screen.
2. Push F2 (Menu).
3. Push ^ or v to select [Diagnostic Tools], then push ↵.
4. Push ^ or v to select [Rotation Direction Trouble Shoot], then push ↵.
5. Select [Wrong direction], then push ↵.
6. Select [Execute trouble shoot], then push ↵.

4.8 Setup Procedure for Elevator Applications

◆ External Interlock

For applications that will have unwanted effects on the system if the drive stops, make an interlock between fault relay output (MA, MB, MC) and the MFDO Drive Ready signal.

■ Drive Ready

When the drive is operating or is prepared to accept an Up/Down command, the MFDO terminal to which *Drive Ready [H2-xx = 6]* is set will enter the ON status.

In these conditions, Drive Ready is OFF and the drive ignores Up and Down commands:

- The drive is de-energized
- During a fault
- There is problem with the control power supply
- There is a parameter setting error that will not let the drive run, although an Up/Down command is entered
- An overvoltage or undervoltage fault occurs when the Up/Down command is entered
- The drive is in Programming Mode.

◆ Speed Reference Selection and Up/Down Command Selection

⚠ WARNING Sudden Movement Hazard
Make sure that *b1-03 = 0 [Stopping Method Selection = Ramp to Stop]* before you apply an Up/Down command.
If *b1-03 ≠ 0* when you apply an Up/Down command, it can cause serious injury or death from elevator free-fall when you remove the Up/Down command.

⚠ WARNING Sudden Movement Hazard
Verify the maximum drive output frequency before you apply an Up/Down command.
The drive can run the motor at high speeds. If the maximum drive output frequency is incorrect, it can cause serious injury or death.

⚠ WARNING Sudden Movement Hazard
Use the MFDO signal set for *H2-xx = 61 [Pole Position Detection Complete]* to interlock the brake to make sure that the drive completes Pole Position Detection before it releases the brake.
If the drive releases the brake too soon, the pull of the counterweight can move the elevator and cause serious injury or death.

⚠ WARNING Sudden Movement Hazard
Always turn OFF the Up/Down command before you change *b1-01 [Speed Reference Selection 1]*, *d1-18 [Speed Reference Selection Mode]*, or *H1-xx [MFDI Function Selection]*.
If the Up/Down command is ON when you change these parameter settings, the motor can unexpectedly start to run and cause serious injury or death.

■ Speed Reference Selection

Parameter *b1-01 [Speed Reference Selection 1]* sets the speed reference source.

b1-01 Setting	Reference Source	Speed Reference Input
0 (default)	Keypad	The drive uses the keypad to enter the speed reference.
1	Analog Input *1	The drive uses MFAI terminals A1 or A2 to input an analog speed reference with a voltage or current input signal.
2	Memobus/Modbus Communications *2	The drive uses the serial communication port RS-485 to enter the speed reference.
3	Option PCB *2	The drive uses a communications option card or input option card connected to the drive to enter the speed reference.

*1 When *b1-01 = 1 [Analog Input]*, the drive will automatically set *d1-18 = 0 [Speed Reference Selection Mode = Multi-speed Mode1 (d1-01 to 08)]*.
*2 When *d1-18 = 1 or 2 [High speed has priority or Leveling speed has priority]*, the speed reference entered from MFDI terminals will have priority over other speed references.

■ Up/Down Command Selection

Parameter *b1-02 [Up/Down Command Selection 1]* sets the Up/Down command source.

b1-02 Setting	Up/Down Command Source	Up/Down Command Input
0	Keypad	The drive uses the keypad to enter the Up/Down command.
1 (default)	Digital Input	The drive uses the control circuit terminals to enter the Up/Down command. Use an *H1-xx* parameter to select the input method for the Up/Down command.
2	Memobus/Modbus Communications	The drive uses the serial communication port RS-485 to enter the Up/Down command.
3	Option PCB	The drive uses a communications option card or input option card connected to the drive to enter the Up/Down command.

■ Travel Start

To start the elevator in the Up or Down direction, make sure that you do these items:

- Select a speed reference greater than zero.
- Close the Safe Disable signals at terminals H1 and H2.
- Set an Up or Down Signal at the source specified in *b1-02 [Up/Down Command Selection 1]*.

■ Travel Stop

The drive stops when:

- You clear the Up or Down command.
- You set *d1-18 = 1 or 2 [Speed Reference Selection Mode = High speed has priority or Leveling speed has priority]* and clear the Up/Down command or the *Leveling Speed* signal (*H1-xx = 53*).
- You set *d1-18 = 3 [Multi-speed Mode2 (d1-02 to 08)]* and clear all speed inputs.
- The drive detects a fault. There are different stopping methods for different faults and parameter settings.
- The Safe Disable inputs are opened or a Baseblock signal is input. When one of these occurs, the brake is applied immediately and the drive output shuts off.

◆ Speed Selection Using Digital Inputs (b1-01 = 0)

Set *b1-01 = 0 [Speed Reference Selection 1 = Keypad]* to enable the speed selection using the drive digital inputs. Use *d1-18 [Speed Reference Selection Mode]* to determine different travel speeds selected by the digital inputs.

⚠ WARNING Sudden Movement Hazard

Always turn OFF the Up/Down command before you change *b1-01 [Speed Reference Selection 1]*, *d1-18 [Speed Reference Selection Mode]*, or *H1-xx [MFDI Function Selection]*.
If the Up/Down command is ON when you change these parameter settings, the motor can unexpectedly start to run and cause serious injury or death.

d1-18 Setting	Speed Selection
0 [Multi-speed Mode 1 (d1-01 to 08)] (default)	Multi-step speed inputs 1: Speed references are set in *d1-01 [Reference 1]* to *d1-08 [Reference 8]*
1 [High speed has priority]	Separate speed inputs: Speed references are set in *d1-19 [Nominal Speed]* to *d1-23 [Releveling Speed]* and *d1-26 [Leveling Speed]*, Higher speed has priority
2 [Leveling speed has priority]	Separate speed inputs: Speed references are set in *d1-19* to *d1-23* and *d1-26*, Leveling speed has priority
3 [Multi-speed Mode 2 (d1-02 to 08)]	Multi-step speed inputs 2: Speed references are set in *d1-02 [Reference 2]* to *d1-08*, Stop if no speed selection input is enabled

■ Multi-Speed Inputs 1, 2 (d1-18 = 0 or 3)

Speed Selection

When *d1-18 = 0 or 3 [Speed Reference Selection Mode = Multi-speed Mode1 (d1-01 to 08) or Multi-speed Mode2 (d1-02 to 08)]*, MFDI terminals are preset as shown in this table.

Terminal	Parameter Number	Setting Value	Details
S5	*H1-05 [Terminal S5 Function Selection]*	3	Multi-Step Speed Reference 1
S6	*H1-06 [Terminal S6 Function Selection]*	4	Multi-Step Speed Reference 2
S7	*H1-07 [Terminal S7 Function Selection]*	5	Multi-Step Speed Reference 3

You can select different speed reference settings by combining the three digital inputs as shown in Table 4.10.

Note:

Parameters *d1-19 [Nominal Speed]* to *d1-26 [Leveling Speed]* are displayed only when *d1-18 = 1 or 2 [Speed Reference Selection Mode = High speed has priority or Leveling speed has priority]*.

Table 4.10 Status of MFDI Signals and Selected Speed

Digital Inputs			Selected Speed	
Multi-Step Speed Reference 1 (H1-xx = 3)	Multi-Step Speed Reference 2 (H1-xx = 4)	Multi-Step Speed Reference 3 (H1-xx = 5)	d1-18 = 0	d1-18 = 3
OFF	OFF	OFF	*d1-01 [Reference 1]*	Stop
ON	OFF	OFF	• *d1-02 [Reference 2]* • Terminal A1, A2, A3 input value when *H3-xx = 2 [MFAI Function Selection = Auxiliary Frequency Reference 1]*	
OFF	ON	OFF	• *d1-03 [Reference 3]* • Terminal A1, A2, A3 input value when *H3-xx = 3 [Auxiliary Frequency Reference 2]*	
ON	ON	OFF	*d1-04 [Reference 4]*	
OFF	OFF	ON	*d1-05 [Reference 5]*	
ON	OFF	ON	*d1-06 [Reference 6]*	
OFF	ON	ON	*d1-07 [Reference 7]*	
ON	ON	ON	*d1-08 [Reference 8]*	

Setting d1-18 = 0

You can use *d1-01* to *d1-08* to set up to eight speed references. The drive starts with an Up/Down command, and stops when you remove the Up/Down command. When *d1-18 = 0*, *d1-19* to *d1-23 [Releveling Speed]* will not be displayed.

Setting d1-18 = 3

You can use *d1-02* to *d1-08* to set up to seven speed references. The drive starts with an Up/Down command, and stops either when all three input terminals that set the speed reference are deactivated, or when you remove the Up/Down command. When *d1-18 = 0*, *d1-19* to *d1-23* will not be displayed.

■ Separate Speed Inputs (d1-18 = 1 or 2)

You can set and select six different speed settings (defined in *d1-19 [Nominal Speed]* to *d1-23 [Releveling Speed]* and *d1-26 [Leveling Speed]*) using four digital inputs.

Speed Selection

When *d1-18 = 1 or 2 [Speed Reference Selection Mode = High speed has priority or Leveling speed has priority]*, MFDI terminals are preset as shown in this table.

Terminal	Parameter Number	Setting Value	Details
S3	*H1-03 [Terminal S3 Function Selection]*	50	Nominal Speed
S5	*H1-05 [Terminal S5 Function Selection]*	51	Intermediate Speed
S6	*H1-06 [Terminal S6 Function Selection]*	53	Leveling Speed

You can select different speed settings depending on the assignment of the speed selection digital inputs *H1-xx [Digital Inputs]* as shown in Table 4.11.

Note:

Parameters *d1-19* to *d1-26* are displayed only when *d1-18 = 1 or 2*.

Table 4.11 Status of MFDI Signals and Selected Speed

Selected Speed	Leveling and Nominal Speed Assigned (H1-xx = 50 and H1-xx = 53)				Leveling Speed not Assigned (H1-xx ≠ 53)			Nominal Speed not Assigned (H1-xx ≠ 50)		
	50	51	52	53	50	51	52	51	52	53
d1-19 [Nominal Speed]	ON	OFF	OFF	**1*	ON	OFF	OFF	OFF	OFF	OFF
d1-20 [Intermediate Speed 1]	OFF	ON	OFF	**1*	OFF	ON	OFF	ON	OFF	OFF
d1-21 [Intermediate Speed 2]	ON	ON	ON	**1*	ON	ON	ON	-	-	-
d1-22 [Intermediate Speed 3]	OFF	ON	ON	**1*	OFF	ON	ON	ON	ON	OFF
d1-23 [Releveling Speed]	OFF	OFF	ON	**1*	OFF	OFF	ON	OFF	ON	OFF

Selected Speed	Leveling and Nominal Speed Assigned (H1-xx = 50 and H1-xx = 53)				Leveling Speed not Assigned (H1-xx ≠ 53)			Nominal Speed not Assigned (H1-xx ≠ 50)		
	50	51	52	53	50	51	52	51	52	53
d1-26 [Leveling Speed]	OFF	OFF	OFF	ON	OFF	OFF	OFF	OFF	OFF	ON
Zero Speed	OFF	OFF	OFF	OFF	-	-	-	-	-	-

*1 The drive operation changes when the *d1-18* setting changes:

- *d1-18 = 1*: When the MFDI signal is ON, the drive will not switch the speed reference to *d1-26*.
- *d1-18 = 2*: When the MFDI signal is ON, the drive will switch the speed reference to *d1-26*.

Higher Speed has Priority and the Leveling Speed Input is Assigned (d1-18 = 1 and H1-xx = 53) (Default)

The higher speed has priority over the leveling speed. The leveling signal is disregarded as long as any other speed selection input is active. The drive decelerates to *d1-26 [Leveling Speed]* when the selected speed reference signal is removed.

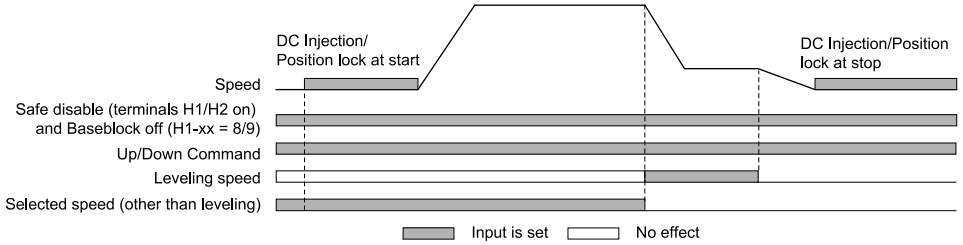

Higher Speed Priority is Selected and the Leveling Speed Input is Not Assigned (d1-18 = 1 and H1-xx ≠ 53)

The drive decelerates to *d1-26 [Leveling Speed]* when the selected speed reference signal is removed.

If no speed reference is selected at start, the drive will trigger an *FrL [Speed Reference Missing]* fault. Set *S6-15 = 0 [Speed Reference Loss Detection = Disabled]* to disable the *FrL* detection. With this setting the drive starts using leveling speed if no other speed reference is selected.

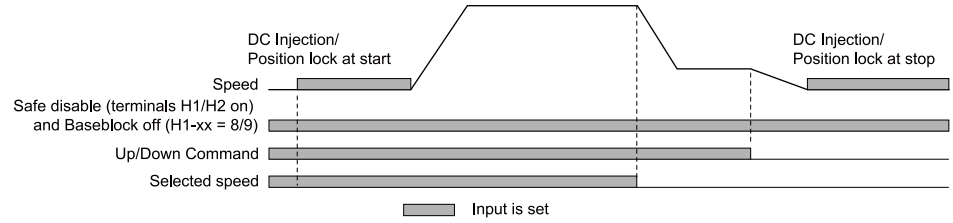

Leveling Speed has Priority and the Leveling Speed Input is Assigned (d1-18 = 2, H1-xx = 53)

The leveling signal has priority over other speed references. The drive decelerates to *d1-26 [Leveling Speed]* when the leveling speed selection input is activated. The drive stops when the leveling input or the Up/Down command is released.

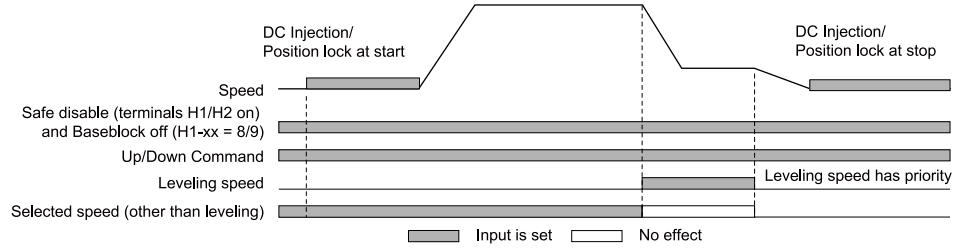

Leveling Speed Priority is Selected and the Nominal Speed Input is Not Assigned (d1-18 = 2, H1-xx ≠ 50)

The drive runs at *d1-19 [Nominal Speed]* when no speed selection input is set. When the leveling speed signal is set, the drive decelerates to the leveling speed. The leveling speed signal has priority over all other speed signals.

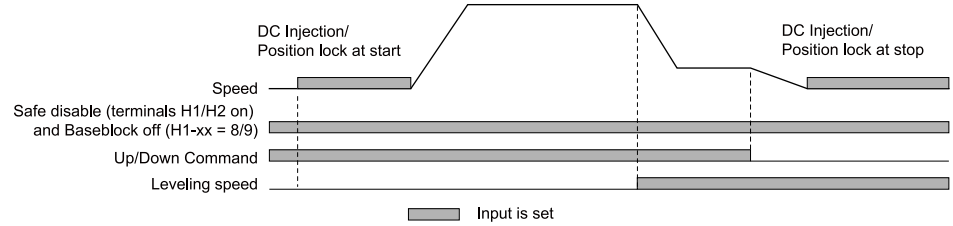

◆ Multi-Function Terminal Setup

■ Multi-Function Digital Inputs (Terminals S3 to S10)

The *H1 parameters* assign functions to MFDI terminals S3 to S10. Refer to *H1: Digital Inputs on page 589* for more information about each function.

■ Multi-Function Digital Outputs

The *H2 parameters* assign functions to MFDO terminals M1-M2, M3-M4, M5-M6, P1-C1, and P2-C2. Refer to *H2: Digital Outputs on page 603* for more information about each function.

■ Multi-Function Analog Inputs

The *H3 parameters* assign functions to MFAI terminals A1, A2, and A3. Refer to *H3: Analog Inputs on page 619* for more information about each function.

■ Multi-Function Analog Outputs

The *H4 parameters* assign functions to MFAO terminals FM and AM. Set the *x-xx* part of monitor *Ux-xx* to select the function. Refer to *U: Monitors on page 488* for more information about *U monitor parameters*.

◆ Accel/Decel Ramp and Jerk Settings

Acceleration and deceleration ramps are set using the *C1-xx [Accel & Decel Ramp]* parameters. Use the *C2-xx [Jerk Characteristics]* parameters to adjust the jerk at the start of acceleration or deceleration.

Figure 4.12 shows how you can use acceleration/deceleration ride and jerk characteristics to adjust the ride profile.

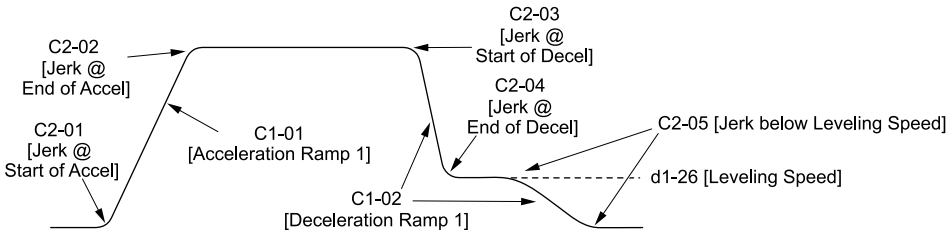

Figure 4.12 Accel/Decel Ramp and the Jerk Function

Units used to set the acceleration and deceleration ramp and the jerk characteristics change when *o1-03 [Speed Display Unit Selection]* changes. Refer to *Keypad Display Unit Selection on page 134* for more information.

◆ Elevator Emergency Stop

■ Start Condition for Elevator Emergency Coast to Stop

An emergency coast to stop is done when the Up/Down command is cleared and all of the following conditions are true:

- *b1-03 = 4 [Stopping Method Selection = Elevator Emergency Stop]*
- *d1-18 =0 or 3 [Speed Reference Selection Mode = Multi-speed Mode1 (d1-01 to 08) or Multi-speed Mode2 (d1-02 to 08)]*
- *b1-01 = 1 [Speed Reference Selection 1 = Analog Input]*
- The Up/Down command is removed and *U1-05 [Speed Feedback]* ≥ *S1-26 [Emergency Stop Start Level]*.

■ Elevator Emergency Stop Timing Chart

Figure 4.13 and Figure 4.14 show the time charts for Elevator Emergency Coast to Stop.

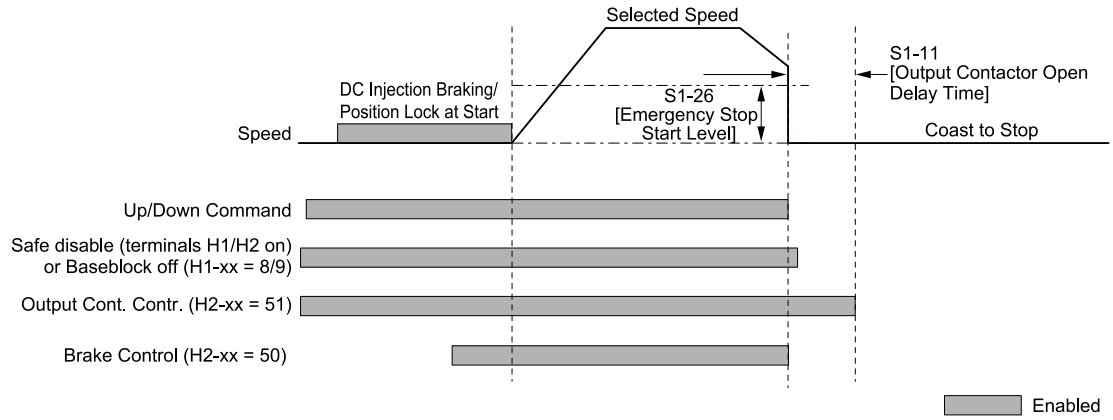

Figure 4.13 With Up/Down Command Removed and U1-05 ≥ S1-26

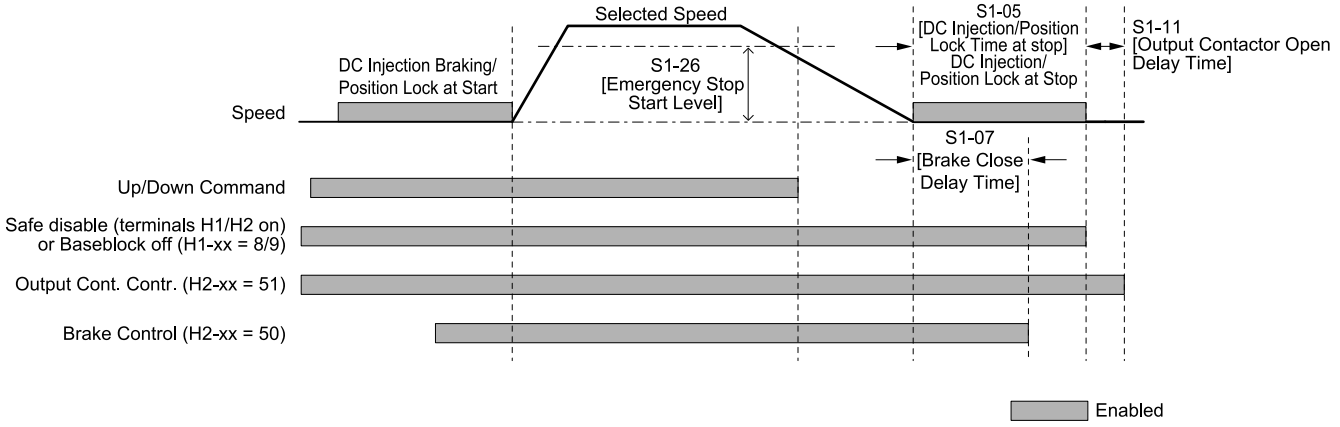

Figure 4.14 With Up/Down Command Removed and U1-05 < S1-26

◆ Inspection Operation

■ Start in Inspection Mode

⚠ WARNING Sudden Movement Hazard

Always turn OFF the Up/Down command before you change *b1-01 [Speed Reference Selection 1]*, *d1-18 [Speed Reference Selection Mode]*, or *H1-xx [MFDI Function Selection]*.
If the Up/Down command is ON when you change these parameter settings, the motor can unexpectedly start to run and cause serious injury or death.

The drive does the inspection operation when it receives an Up/Down command while one of these conditions is true:

- Parameter *d1-18 = 0 or 3 [Speed Reference Selection Mode = Multi-speed Mode1 (d1-01 to 08) or Multi-speed Mode2 (d1-02 to 08)]* and the selected speed is higher than *d1-28 [Leveling Speed Detection Level]*, but lower than *d1-29 [Inspection Speed Detection Level]*.
- Parameter *d1-18 = 1 or 2 [High speed has priority or Leveling speed has priority]* and an MFDI terminal set for *H1-xx = 54 [Inspection Operation]* activates.

The inspection operation start uses the same acceleration characteristics, brake sequence, and contactor sequence as in normal operation. The carrier frequency is set to 2 kHz during Inspection Operation, but you can use *C6-21 [Carrier Frequency @ Inspection]* to change it.

■ Stop in Inspection Mode

To stop the drive in Inspection Mode, remove the Up/Down command or deactivate the MFDI terminal set for *Inspection Operation*.

The inspection stop can use a deceleration ramp, depending on the setting of *C1-15 [Inspection Deceleration Ramp]*.

- If *C1-15 = 0 s*, the drive immediately applies the brake, shuts off the drive output, and deactivates the signals set for *H2-xx = 50 [Brake Control]* and *H2-xx = 51 [Output Contactor Control]*.
- If *C1-15 > 0 s*, the drive decelerates at the deceleration rate set in *C1-15*, then immediately applies the brake, shuts off the drive output, and deactivates the signals set for *H2-xx = 50 [Brake Control]* and *H2-xx = 51 [Output Contactor Control]*.

■ Inspection Operation Time Chart

Figure 4.15 shows the time chart for Inspection Operation.

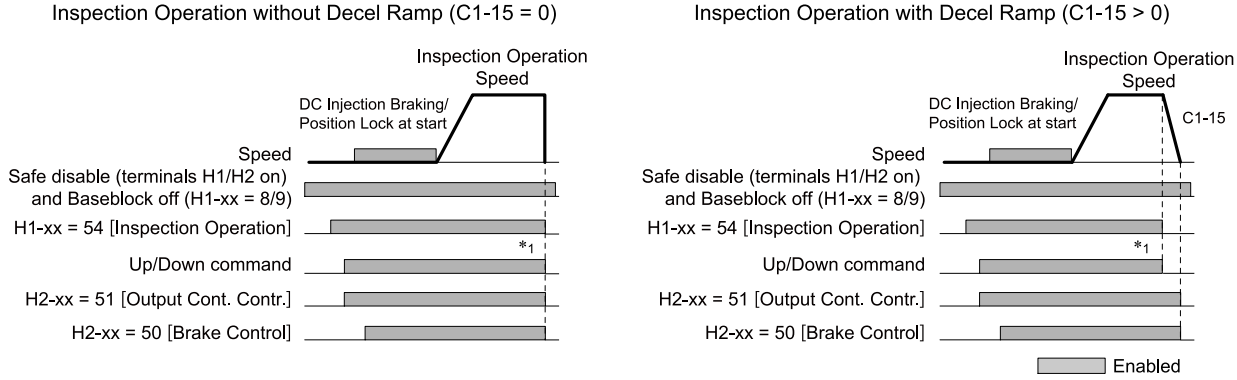

*1 The drive stops if you remove the Up/Down command or you deactivate the MFDI terminal set for *Inspection Operation*.

Figure 4.15 Inspection Operation Sequence

◆ Brake Sequence

⚠ WARNING Sudden Movement Hazard
Correctly set an Emergency Stop ramp to *C1-09 [Emergency Stop Ramp]* to make sure that the motor stops quickly and safely when you use the Emergency Stop function.
Rapid deceleration can trigger an overvoltage fault. If the drive detects an overvoltage fault, the drive output shuts off and the motor coasts. This uncontrolled motor state can cause serious injury or death.

⚠ WARNING Sudden Movement Hazard
Always turn OFF the Up/Down command before you change *b1-01 [Speed Reference Selection 1]*, *d1-18 [Speed Reference Selection Mode]*, or *H1-xx [MFDI Function Selection]*.
If the Up/Down command is ON when you change these parameter settings, the motor can unexpectedly start to run and cause serious injury or death.

The drive supports two types of brake sequences, one with torque compensation at start using *H3-xx = 14 [MFAI Function Selection = Torque Compensation]* and the other without torque compensation at start.

■ Brake Sequence without Torque Compensation

To configure the brake sequence operation without torque compensation, do not set any MFAI terminals for *H3-xx = 14 [MFAI Function Selection = Torque Compensation]*.

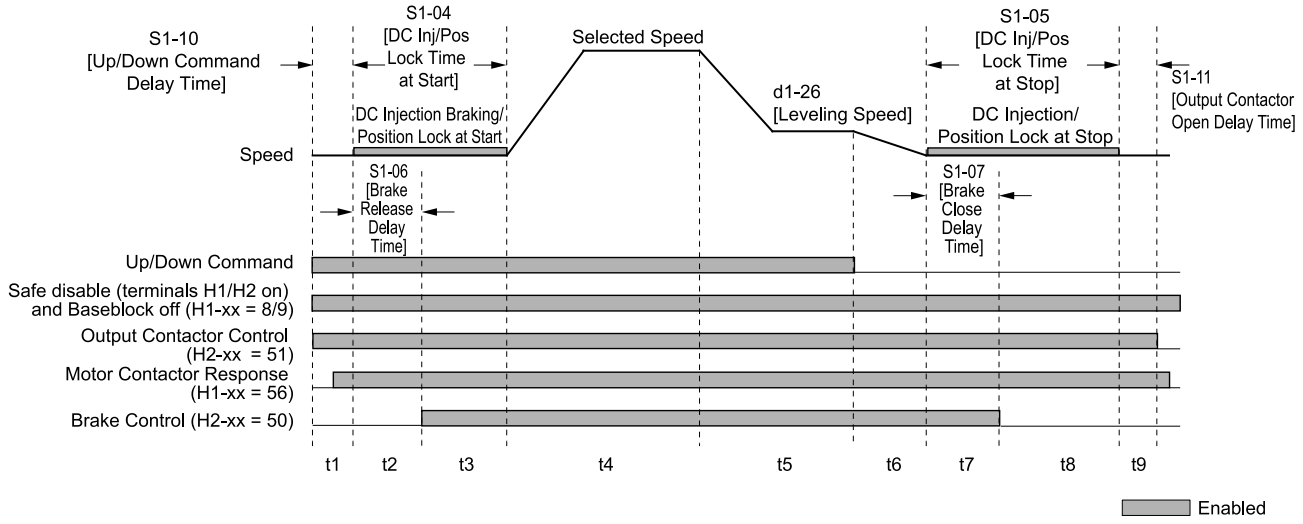

Figure 4.16 Brake Sequence without Torque Compensation at Start

Figure 4.16 is divided into time zones. Table 4.12 explains the sequence in each time zone.

Table 4.12 Time Zones for Brake Sequence without Torque Compensation at Start

Time Zone	Description
t1	Up/Down command is issued.
	You must set Safe Disable terminals H1-HC and H2-HC and you must disable the signals set to *H1-xx = 8 or 9 [MFDI Function Selection = Baseblock Command]*.
	Speed reference must be selected by MFDI terminals.
	The drive sets the *H2-xx = 51 [Output Contactor Control]* signal.
	Drive waits for the signal set for *H1-xx = 56 [Motor Contactor Feedback]* to be issued. If the drive does not receive motor contactor feedback within t1, or if the feedback signal is ON before the contactor control command has been issued, it will trigger an *SE1 [Motor Contactor Response Error]* fault. If you do not use a motor contactor feedback signal, the drive waits for the operation start delay time set in *S1-10 [Up/Down Command Delay Time]* to pass before it goes to the next step.
t2	After the delay time set in *S1-10* passes, the drive outputs current to the motor. DC Injection Braking or Position Lock begins.
	After the brake release delay time set in *S1-06 [Brake Release Delay Time]* has passed, the drive sets the *H2-xx = 50 [Brake Control]* output in order to release the brake.
t3	DC Injection Braking or Position Lock will continue until one of these conditions is true: The time *S1-04 [DC Inj/Pos Lock Time at Start]* has elapsed. The time *S1-06* has elapsed if *S1-06 > S1-04* (you should avoid this setting since it could drive the motor against the applied brake).
t4	The drive accelerates up to the selected speed. The speed is kept constant until the leveling speed is selected.
t5	Leveling speed is selected. The drive decelerates to the leveling speed and keeps that speed until you remove the Up/Down command.
t6	The Up/Down command is cleared. The drive decelerates to zero speed.
t7	The motor speed reaches the zero speed level set in *S1-01 [Zero Speed Level at Stop]*. The drive then does DC Injection Braking or Position Lock for the time set in *S1-05 [DC Inj/Pos Lock Time at Stop]*.
	After the delay time to close the brake set in *S1-07 [Brake Close Delay Time]* has passed, the drive clears the *H2-xx = 50 [Brake Control]* output. The brake applies.
t8	The drive continues DC Injection or Position Lock until the time set in *S1-05* has passed. When *S1-05* has passed, the drive output is shut off.
t9	After the delay for the magnetic contactor set in *S1-11 [Output Contactor Open Delay Time]* has passed, the drive resets the output terminal set for *H2-xx = 51 [Output Contactor Control]*. You can now clear the Safe Disable Inputs and enable Baseblock.

■ Brake Sequence Using Torque Compensation

If a load measuring device is installed in the elevator, you can use an analog input to input a torque compensation value to the drive. This function requires one of the closed loop control modes (CLV or CLV/PM). To use torque compensation, set one of the MFAI terminals to *H3-xx = 14 [MFAI Function Selection = Torque Compensation]*.

Figure 4.17 is a time chart for a brake sequence using torque compensation.

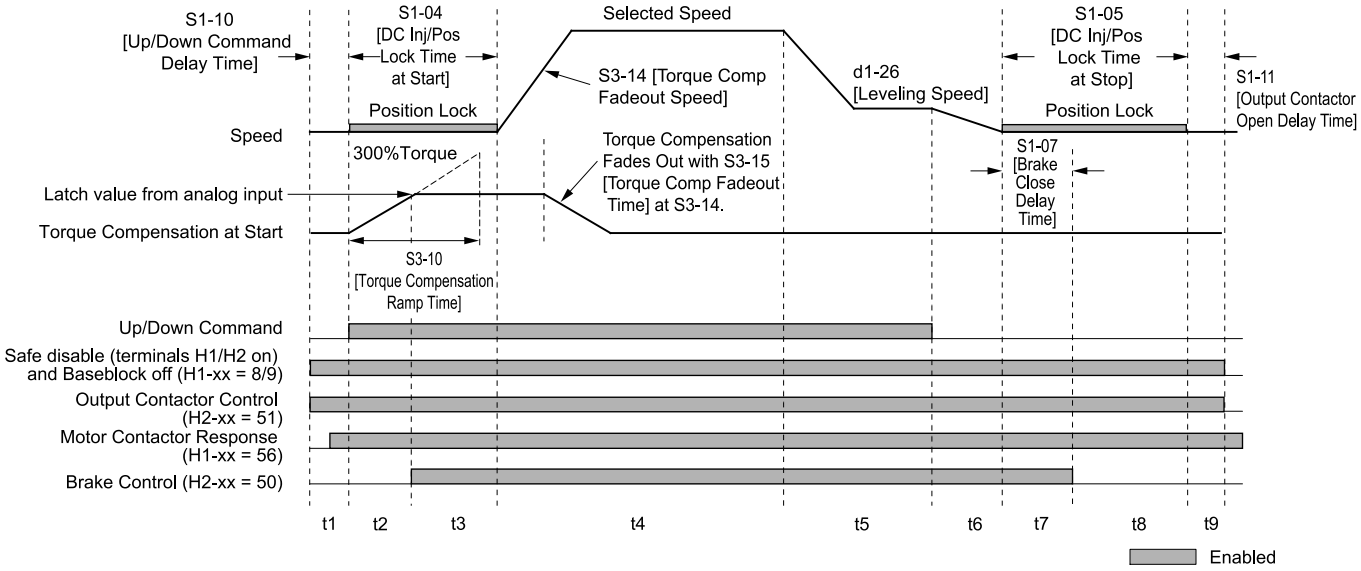

Figure 4.17 Brake Sequence Using Torque Compensation at Start

Figure 4.17 is divided into time zones. Table 4.13 explains the sequence in each time zone.

Table 4.13 Time Zones for Brake Sequence Using Torque Compensation at Start

Time Zone	Description
t1	Up/Down command is issued.
	You must set Safe Disable terminals H1-HC and H2-HC and you must disable the signals set to *H1-xx = 8 or 9 [MFDI Function Selection = Baseblock Command]*.
	Speed reference must be selected by MFDI terminals.
	The drive sets the *H2-xx = 51 [Output Contactor Control]* signal.
	Drive waits for the signal set for *H1-xx = 56 [Motor Contactor Feedback]* to be issued. If the drive does not receive motor contactor feedback within t1, or if the feedback signal is ON before the contactor control command has been issued, it will trigger an *SE1 [Motor Contactor Response Error]* fault. If you do not use a motor contactor feedback signal, the drive waits for the operation start delay time set in *S1-10 [Up/Down Command Delay Time]* to pass before it goes to the next step.
	The drive reads the torque value from the analog input (load cell).
t2	After the delay time set in *S1-10* passes, the drive outputs current to the motor. Position Lock begins.
	The torque value from the analog input is latched and internal torque compensation value is increased from zero to the latched value using the time constant set in *S3-10 [Torque Compensation Ramp Time]*.
	After the internal torque compensation level reaches the latched value, the drive sets the *H2-xx = 50 [Brake Control]* output to release the brake.
t3	The brake is released and the drive executes Position Lock until the time set in *S1-04 [DC Inj/Pos Lock Time at Start]* has passed.
t4	The drive accelerates up to the selected speed. After *S3-14 [Torque Comp Fadeout Speed]* is reached during acceleration, the internal torque compensation value is reduced as specified by the time constant set in *S3-10*.
t5	Leveling speed is selected. The drive decelerates to the leveling speed and keeps that speed until you remove the Up/Down command.
t6	The Up/Down command is cleared. The drive decelerates to zero speed.
t7	The motor speed reaches the zero speed level set in *S1-01 [Zero Speed Level at Stop]*. The drive then does DC Injection Braking or Position Lock for the time set in *S1-05 [DC Inj/Pos Lock Time at Stop]*.
	After the delay time to close the brake set in *S1-07 [Brake Close Delay Time]* has passed, the drive clears the *H2-xx = 50 [Brake Control]* output. The brake applies.
t8	The drive continues DC Injection or Position Lock until the time set in *S1-05* has passed. When *S1-05* has passed, the drive output is shut off.
t9	After the delay for the magnetic contactor set in *S1-11 [Output Contactor Open Delay Time]* has passed, the drive resets the output terminal set for *H2-xx = 51 [Output Contactor Control]*. You can now clear the Safe Disable Inputs and enable Baseblock.

Adjusting the Torque Compensation at Start

To use torque compensation at start, apply at least 50% of the maximum weight to the elevator car and set the drive as specified by the Load Condition 2 procedure below. If you use a voltage signal to the analog input terminals as a load sensor, that input signal will determine the rate of torque compensation applied according to *S3-27 [Load1 Torque Compensation Level]* and *S3-28 [Load2 Torque Compensation Level]*.

Before you can use the torque compensation function, you must adjust the analog input scaling to the load sensor output. To do this, bring the elevator into two different load conditions and teach the corresponding analog input value and torque reference value to the drive.

Note:

1. This torque compensation requires a closed loop control mode (CLV, CLV/PM).
2. The torque compensation value is limited to 120%.

Set an MFAI terminal for *H3-xx = 14 [Torque Compensation]* and do the steps below.

Procedure for Load Condition 1 (S3-27, S3-29)

1. Make sure the drive is wired properly. Refer to *Improve Ride Comfort on page 206* for more information.
2. Set the speed reference to 0%.
3. Apply no weight to the elevator car.
4. Note the value of the analog input monitor for the load signal input connected to (*U1-13 [Terminal A1 Level]* for terminal A1, *U1-14 [Terminal A2 Level]* for terminal A2, *U1-15 [Terminal A3 Level]* for terminal A3).
5. Provide an elevator Up/Down command, using Inspection Operation or normal operation mode. The car should be held in place when the brake releases.
6. Note the internal torque reference monitor *U1-09 [Torque Reference]* of the drive.
7. Stop the drive.
8. Set the value noted in step 4 to *S3-29 [Load 1 Analog Input Level]*. Set the value noted in step 6 to *S3-27*.

Procedure for Load Condition 2 (S3-28, S3-30)

1. Set the speed reference to 0%.
2. Apply as much load to the car as possible (at least 50% of the maximum weight).
3. Note the value of the analog input monitor for the load signal input connected to (*U1-13 [Terminal A1 Level]* for terminal A1, *U1-14 [Terminal A2 Level]* for terminal A2, *U1-15 [Terminal A3 Level]* for terminal A3).
4. Provide an elevator Up/Down command, using Inspection Operation or normal operation mode. The car should be held in place when the brake releases.
5. Note the internal torque reference monitor *U1-09 [Torque Reference]* of the drive.
6. Stop the drive.
7. Set the value noted in step 3 to *S3-30 [Load 2 Analog Input Level]*. Set the value noted in step 5 to *S3-28*.

Figure 4.18 shows the Torque Compensation at Start settings with *S3-27* to *S3-30*.

The solid line in Figure 4.18 identifies the torque compensation at start when the elevator moves up or down.

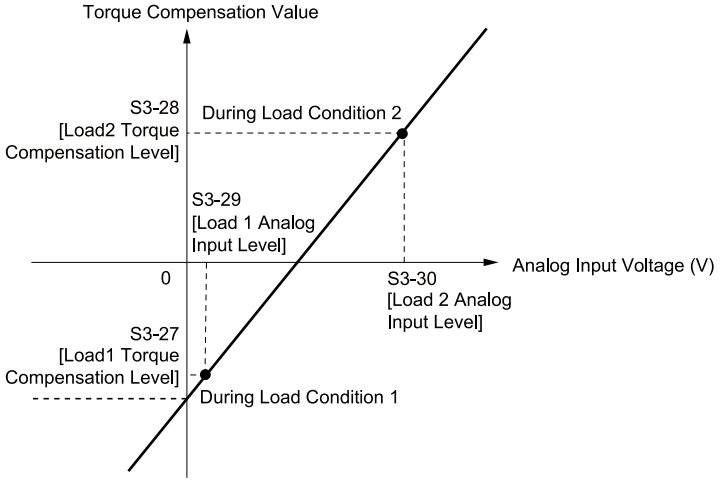

Figure 4.18 Torque Compensation at Start for the Elevator in Up and Down Direction

After setting load conditions 1 and 2, do a trial run. If necessary, you can set *S3-12 [Torque Comp. Bias in Down Direct]* to add a bias to the load sensor input when riding in a Down direction (default: 0.0%, same torque compensation characteristics in up and down direction). Figure 4.19 illustrates the effect of torque compensation on the settings of *S3-12* and *S3-27* to *S3-30*.

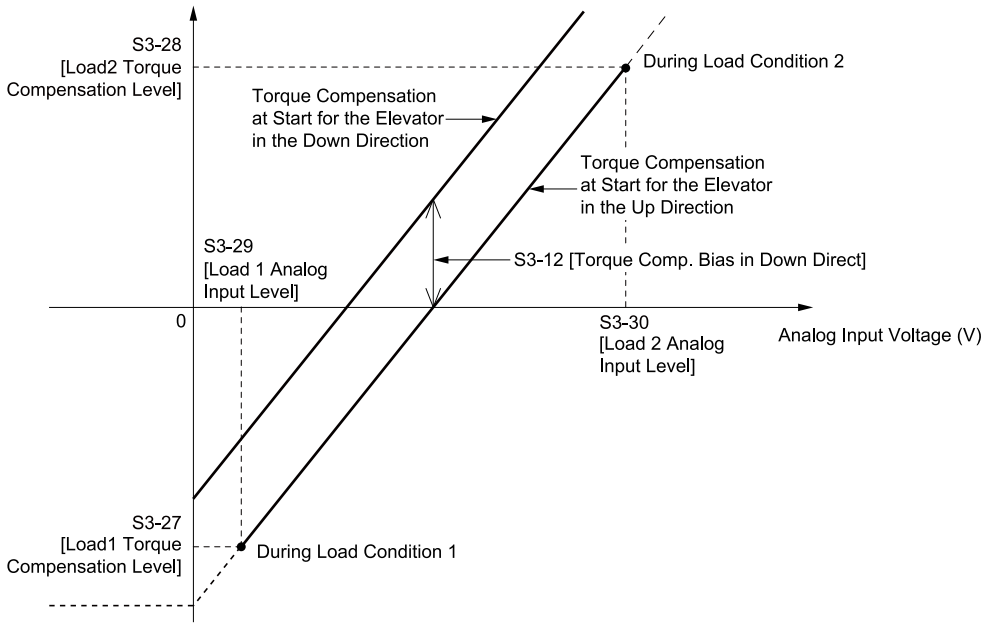

Figure 4.19 Torque Compensation at Start for the Elevator in Up and Down Direction

◆ Brake Torque Check Function

The brake torque check function checks the holding torque of the motor brake.

The drive receives the MFDI signal set for *Brake Trq Req* (*H1-xx = 5D*) and Up/Down command from the PLC. When the Up/Down command is turned ON (closed) while the MFDI signal set for *Brake Trq Req* is ON (closed) during zero-speed detection, the drive starts the brake torque check.

Do the brake torque check with 0% load and the brake closed. If the elevator moves during the check, the drive determines that the brake has deteriorated, detects a *brA [Brake Deterioration]* fault, and then stops.

Note:
- You can use this function only when *A1-02 = 3 or 7 [Control Method Selection = CLV or CLV/PM]*.
- The drive will not detect a *PGo [Encoder (PG) Feedback Loss]* fault, *SE2 [Starting Current Error]* fault, or *SE4 [Brake Response Error]* fault during the brake torque check.
- The drive disables this function during Rescue Operation or Inspection Operation.

■ Operation Conditions to Use the Brake Torque Check Function

- Before you begin, set *S5-32 [Applying Motor Torque During BTC]* as the brake torque check reference value.
- Do not add weight to the elevator car.
- Use the Up command to operate the drive.
- Position the elevator car on a middle floor to decrease the effect of weight on the cable.

■ Setting Value of S5-32

Subtract the torque that is pulled by the counterweight in upward operation with 0% load from the required brake torque. Use this difference as the value for *S5-32*.

- (Example) When required brake torque is 150% and the torque pulled by the counterweight is 100%:
  S5-32 = 150% - 100% = 50%

1. When you use a drive monitor to check the torque pulled by the counterweight to set *S5-32*:
   Do Position Lock (upward operation) with the brake open and at 0% load, and check the value of *U1-09 [Torque Reference]*.
2. When you calculate the brake torque to set *S5-32*:
   In upward operation with 0% load, when the motor is stopped, brake torque Tb = load torque TL × η.
   Since the motor outputs the torque in the same direction as the load torque TL, the brake torque to stop the motor (to stop the elevator) is:
   Tb = motor torque Tm + TL × η
   Therefore, *S5-32* (%) = (Tb - TL × η) / motor rated torque Tm_{100} × 100

Note:
- TL: Load torque (torque pulled by the counterweight) for upward operation with 0% load
- η: Machine efficiency
- Tb: Brake torque
- Tm: Motor torque
- Tm_{100}: Motor rated torque

- (Example) When the elevator rated load is 600 kg, speed is 45 m/min, required brake torque is 31 N·m, machine efficiency is 0.6, rated motor speed is 1750 min^{-1}, and motor rated torque is 20.19 N·m:
  Required power P (kW) = 600 kg / 2 × 45 m/min / (6120 × η0.6) = 3.676 kW
  Load torque TL (N·m) = (60 × 3.676 kW) / (2π × 1750min^{-1}) × 103 = 20.06 N·m
  S5-32 = (31 N·m - 20.06 N·m × 0.6) / 20.19 N·m × 100 = 147.4%

■ Brake Torque Check Sequence

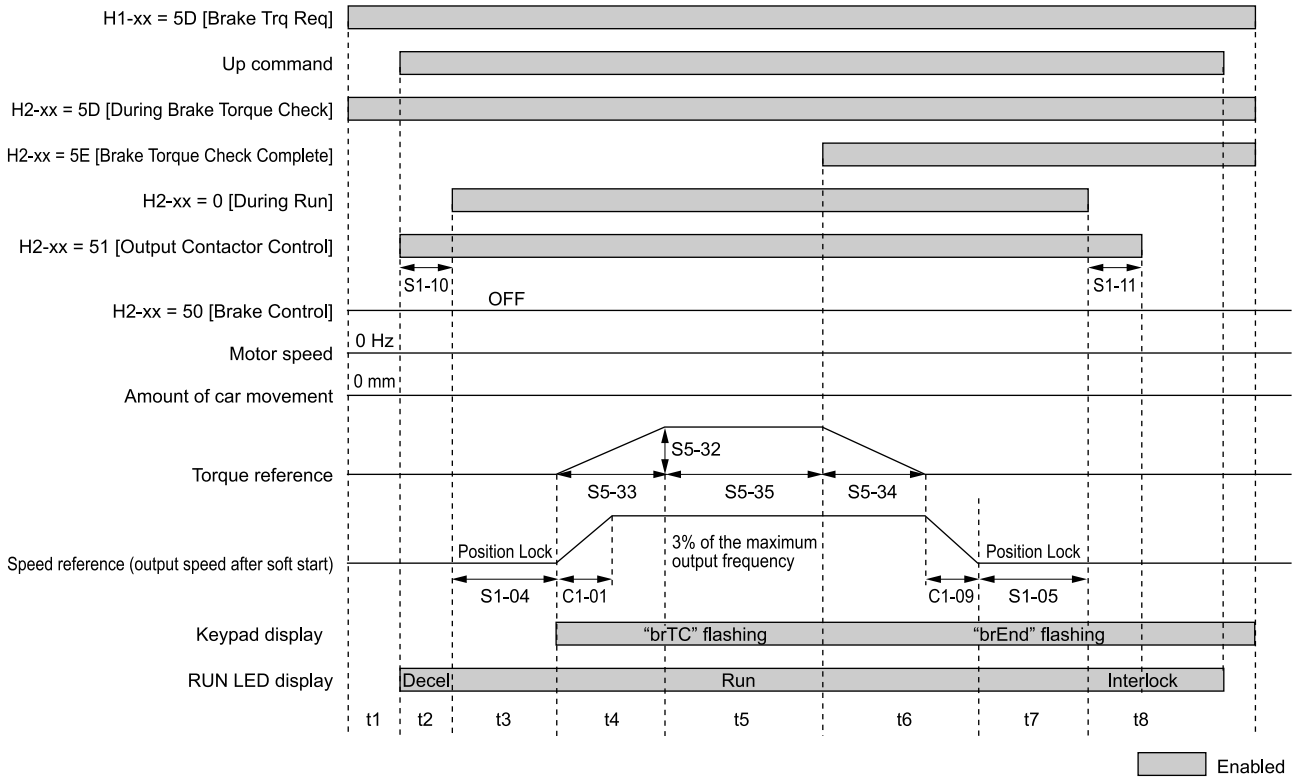

Figure 4.20 Brake Torque Check Sequence

Note:
- The brake sequence after the Up/Down command is turned ON is the same as the normal brake sequence, but the drive will not release the brake.
- The carrier frequency is fixed at 2 kHz and the PWM method is fixed at 3-phase modulation during the brake torque check.
- The internal torque limit during the brake torque check is the value set in *S5-32 [Applying Motor Torque During BTC]*.
- If *S5-32* is set larger than the torque limit of the unit, an *oPE21 [Elevator Parameter Setting Fault]* error will occur.
- The drive internally does the Emergency Stop operation when the brake torque check is completed.

Figure 4.20 is divided into time zones. Table 4.14 explains the sequence in each time zone.

Table 4.14 Time Zones for Brake Torque Check Sequence

Time Zone	Description
t1	You must set Safe Disable terminals H1-HC and H2-HC and you must disable the signals set to *H1-xx = 8 or 9 [MFDI Function Selection = Baseblock Command]*.
	When the *Brake Trq Req* command (*H1-xx = 5D*) is turned ON, the MFDO terminal outputs the *During Brake Torque Check* signal (*H2-xx = 5D*).
	Up command is issued.
t2	Drive waits for the *Motor Contactor Feedback N.O.* signal (*H1-xx = 56*) to be issued.
	If the drive does not receive motor contactor feedback within t2, or if the feedback signal is ON before the contactor control command has been issued, it will trigger an *SE1 [Motor Contactor Response Error]* fault. If you do not use a motor contactor feedback signal, the drive waits for the operation start delay time set in *S1-10 [Up/Down Command Delay Time]* to pass before it goes to the next step.
t3 *1	After the delay time set in *S1-10* passes, the drive outputs current to the motor. Position Lock begins.

Time Zone	Description
t4 *2 *3 *4	The drive starts accelerating at the brake torque check speed (fixed at 3%).
	The torque increases to the value set in *S5-32* in the time set in *S5-33 [Motor Torque Ramp Up Time]*.
t5 *2 *4	The drive operates as specified by the settings in *S5-35 [Brake Torque Check Run Time]* and *S5-32* to check the brake torque.
t6 *4 *5	After the time set in *S5-35* passes, the torque decreases in the time set in *S5-34 [Motor Torque Ramp Down Time]*, and the drive decelerates to stop. When the brake torque is normal, the drive outputs the *Brake Torque Check Complete* signal (*H2-xx = 5E*).
t7 *5	The motor speed reaches the zero speed level set in *S1-01 [Zero Speed Level at Stop]*. The drive continues Position Lock for the time set in *S1-05 [DC Inj/Pos Lock Time at Stop]*.
t8 *5	After the delay for the magnetic contactor set in *S1-11 [Output Contactor Open Delay Time]* passes, the drive resets the output terminal set for *Output Contactor Control* (*H2-xx = 51*). You can now clear the Safe Disable Inputs and enable Baseblock.
	When the *Brake Trq Req* command (*H1-xx = 5D*) is turned OFF after the Up command is turned OFF, the *During Brake Torque Check* signal (*H2-xx = 5D*) and the *Brake Torque Check Complete* signal (*H2-xx = 5E*) are turned OFF.

*1 During the brake torque check, *Brake Control* (*H2-xx = 50*) is not turned ON because the drive does the Position Lock with the brake closed.
*2 While the drive is running in brake torque check mode, *brTC [During Brake Torque Check]* flashes on the keypad to show that it is in operation.
*3 The multi-step speed reference is disabled during the brake torque check.
*4 The speed reference will be 3% of the maximum output speed during the brake torque check.
*5 When the brake torque check completes successfully, "*brEnd*" will flash on the keypad. You cannot operate the drive from the keypad while "*brEnd*" is displayed.

If the elevator car moves more than the value set in *S5-31 [Car Movement @ Brake T Check]*, the drive detects a *brA [Brake Deterioration]* fault. Figure 4.21 shows the time chart for *brA* detection.

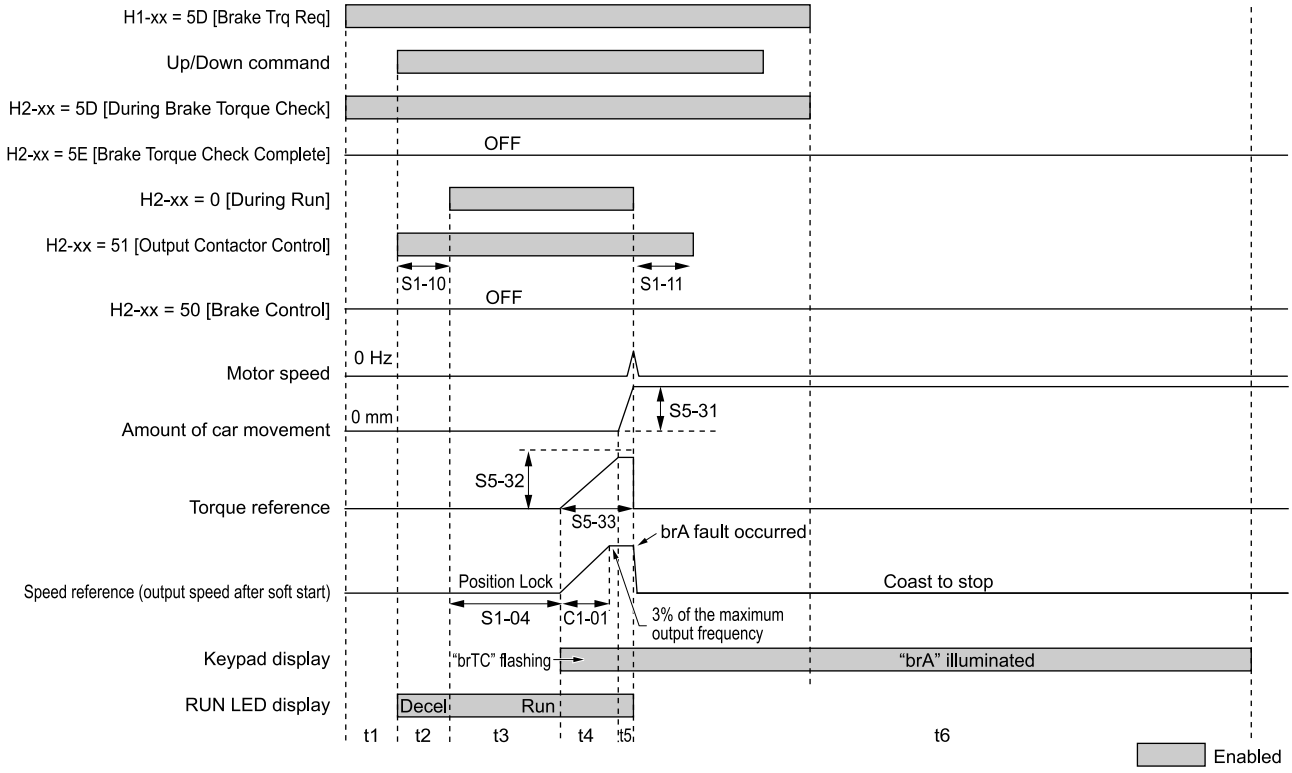

Figure 4.21 Brake Torque Check Sequence in *brA* Detection

Figure 4.21 is divided into time zones. Table 4.15 explains the sequence in each time zone.

Table 4.15 Time Zones for Brake Torque Check Sequence in *brA* Detection

Time Zone	Description
t1	You must set Safe Disable terminals H1-HC and H2-HC and you must disable the signals set to *H1-xx = 8 or 9 [MFDI Function Selection = Baseblock Command]*.
	When the *Brake Trq Req* command (*H1-xx = 5D*) is turned ON, the MFDO terminal outputs the *During Brake Torque Check* signal (*H2-xx = 5D*).
	Up command is issued.
t2	Drive waits for the *Motor Contactor Feedback N.O.* signal (*H1-xx = 56*) to be issued.
	If the drive does not receive motor contactor feedback within t2, or if the feedback signal is ON before the contactor control command has been issued, it will trigger an *SE1* fault. If you do not use a motor contactor feedback signal, the drive waits for the operation start delay time set in *S1-10* to pass before it goes to the next step.
t3	After the delay time set in *S1-10* passes, the drive outputs current to the motor. Position Lock begins.

Time Zone	Description
t4	The drive starts accelerating at the brake torque check speed (fixed at 3%).
	The torque does not increase to the value set in *S5-32*, and the elevator starts to move.
t5	If the elevator car moves more than the value set in *S5-31*, the drive detects a *brA* fault.
t6	The drive shuts off the output and the motor coasts to stop.
	After the delay for the magnetic contactor set in *S1-11* passes, the drive resets the output terminal set for *Output Contactor Control* (*H2-xx = 51*). You can now clear the Safe Disable Inputs and enable Baseblock.
	When the *Brake Trq Req* command (*H1-xx = 5D*) is turned OFF after the Up command is turned OFF, the *During Brake Torque Check* signal (*H2-xx = 5D*) is turned OFF.

◆ Adjustments for Elevator Ride Comfort

This section explains the adjustment of drive settings used to eliminate problems with hunting, vibration, and rollback.

Do the steps in this section after you complete the Basic Application Setup procedure. Also refer to *Improve Ride Comfort on page 206* for more information about how to resolve riding comfort problems.

■ Speed Loop Adjustments (CLV and CLV/PM)

The speed control loop uses four different gain and integral time settings that you can adjust using the *C5-xx [Automatic Speed Regulator (ASR)]* parameters. The settings are switched over when the motor speed reaches the level set in *C5-07 [ASR Gain Switchover Speed]*.

- The drive uses proportional gain and integral time *C5-03 [ASR Proportional Gain 2]*/*C5-04 [ASR Integral Time 2]* at start when the speed is lower than the setting of *C5-07*.
- The drive uses proportional gain and integral time *C5-01 [ASR Proportional Gain 1]*/*C5-02 [ASR Integral Time 1]* at speeds above the setting of *C5-07*.
- The drive uses proportional gain and integral time *C5-13 [ASR Proportional Gain 3]*/*C5-14 [ASR Integral Time 3]* at stop when leveling speed is selected as speed reference and the speed is lower than the setting of *C5-07*.
- The drive uses proportional gain and integral time *C5-19 [ASR P Gain during Position Lock]*/*C5-20 [ASR I Time during Position Lock]* during Position Lock at start in CLV/PM.

Increase the gain and decrease the integral time to increase speed control responsiveness in each of the sections. Decrease the gain and increase the integral time if there is vibration or oscillation.

■ Feed Forward Control Adjustments (CLV and CLV/PM)

You can use Feed Forward Control to eliminate motor speed overshoot at the end of acceleration or undershoot at the end of deceleration caused by the system inertia. Use these steps to adjust the function:

1. Properly adjust the speed control loop parameters (*C5-xx*).
2. Set *n5-01 = 1 [Feed Forward Control Selection = Enabled]* to enable inertia compensation.
3. Calculate and set *n5-02 [Motor Inertia Acceleration Ramp]* and *n5-03 [Feed Forward Control Gain]* as follows:

Motor Acceleration Ramp *n5-02*	$n5\text{-}02 = J_{Mot} \cdot \frac{\pi \cdot n_{r_Mot}}{30 \cdot T_{r_Mot}}$	• J_{Mot} - Motor inertia in kg·m² • n_{r_Mot} - Rated motor speed in min⁻¹ • $T_{r_}$Mot - Rated motor torque in N·m • J_{TS} - Traction sheave inertia in kg·m² • i - Gear ratio (n_{Load}/n_{Mot}) • v_{r_Elev} - Rated elevator speed in m/s • Σm - Mass of all moved parts (car, counterweight, ropes, load *1) in kg
Feed Forward Control Gain *n5-03*	$\Sigma J = J_{TS} \cdot i^2 + \Sigma m \cdot \left(\frac{30 \cdot v_{r_Elev}}{\pi \cdot n_{r_Mot}}\right)^2$ $n5\text{-}03 = \Sigma J / J_{Mot}$	

*1 Insert 0 kg for the load to calculate the lowest setting, insert the elevator rated load to calculate the maximum setting for *n5-03*. Use the lower setting for initial trials.

4. Change the setting of *n5-03* within the limits calculated in step 3 until you get the desired performance. If possible, trace the values of *U1-16 [SFS Output Speed]* and *U1-05 [Speed Feedback]*. Increase *n5-03* if the motor speed does not follow the speed after soft start. Decrease *n5-03* if the motor overshoots the designated speed at the end of acceleration or undershoots the speed at the end of deceleration.

■ Position Lock at Start Adjustments (CLV/PM)

Set the *S3-xx* and *C5-xx* parameters as described below to decrease rollback effects at start.

- With the elevator car unloaded, adjust *C5-19 [ASR P Gain during Position Lock]* and *C5-20 [ASR I Time during Position Lock]*.
  Increase the gain and decrease the integral time to decrease the rollback of the car. Set *C5-19* and *C5-20* in the opposite way if vibration occurs.
- Adjust *S3-02 [Position Lock Gain 2 at Start]*. Increase *S3-02* if rollback occurs, decrease *S3-02* it if vibration occurs.
- If the elevator is balanced and oscillation at start occurs, gradually increase *S3-40 [Position Lock Movement Detection]* in one-pulse increments.

◆ Rescue Operation

If there is a power outage, Rescue Operation switches to a backup battery or Uninterruptable Power Supply (UPS) for power and lets the elevator to travel to the nearest floor.

You can use an input terminal set for *H1-xx = 55 [Rescue Operation]* to initiate Rescue Operation. During Rescue Operation, the drive uses the speed reference set in *S4-15 [Rescue Speed Reference Selection]* to travel to the nearest floor.

⚠ WARNING Sudden Movement Hazard

Always turn OFF the Up/Down command before you change *b1-01 [Speed Reference Selection 1]*, *d1-18 [Speed Reference Selection Mode]*, or *H1-xx [MFDI Function Selection]*.
If the Up/Down command is ON when you change these parameter settings, the motor can unexpectedly start to run and cause serious injury or death.

NOTICE Damage to Equipment

Do not use the Rescue Operation function for long lengths of time.
The low DC bus voltage during Rescue Operation can stop the internal cooling fans of the drive. If you use the Rescue Operation function for a long length of time, it can trigger an *oH [Heatsink Overheat]* fault and can cause damage to the drive.

NOTICE

When the drive is using the Rescue Operation power supply, wait at least 5 seconds after you change parameter settings before you turn OFF the power supply.
If you turn OFF the power supply too soon, it can corrupt the parameter settings and cause incorrect drive performance. You must initialize the drive to resolve the problem.

■ Drive Power Supply for Rescue Operation

There are various methods to supply power to the drive for Rescue Operation. Independent of the chosen method, the voltage in the DC bus of the drive and the voltage supplied to the drive control circuit must meet the specifications provided in Table 4.16.

You can supply the DC bus voltage by a battery connected to the DC bus terminals of the drive or by a UPS connected to drive terminals R/L1 and S/L2. You can supply the control circuit voltage directly from the DC bus of the drive (no external wiring required), from an external battery (connection to CN19), or you can use an optional 24 Vdc control power backup unit.

Yaskawa recommends XAP-4V-1 connector made by JST for connection to CN19.

Note:
When you connect a cable to CN19, use a protective tube to prevent damage from edges.

When you use a single-phase AC power supply for Rescue Operation, such as a single-phase UPS, the ripple in the DC bus voltage will be higher than with a three-phase or battery supply. Make sure that the DC bus voltage does not decrease below the minimum value listed in Table 4.16.

When you use a PM motor, always do Rotational or Stationary Auto-Tuning with the normal power supply connected. The tuning function will automatically set certain parameters to prepare the drive for Rescue Operation. If the tuning ends with an *End8* to *End10* fault, then Rescue Operation will require a battery or UPS that supplies the drive DC bus with at least 280 Vdc for 200 V class drives and 560 Vdc for 400 V class drives. Alternatively, you can use an absolute PG encoder and a PG-E3 or PG-F3 option card.

If the DC bus voltage is low, the overload protection level (*oL2 [Drive Overload]* fault detection level) will be decreased because of the low speed run, which will trigger *oL2*. If the drive detects *oL2*, select the battery or UPS so that the output speed is equal to or greater than 6 Hz.

You can use *U4-40 [Rescue Speed Limit]* to monitor the upper speed limit during Rescue Operation.

Note:

- Use the bracket to install a 24 V Power Supply Unit option to the drive. For more information about the bracket and installations, refer to "Yaskawa AC Drive Option 24 V Power Supply Bracket Installation Manual (TOBPC72060016)".
- When you use a PG-X3 or PG-B3 option, Yaskawa recommends to use a UPS. When you use the backup battery, Yaskawa recommends that you use a PG-E3 or PG-F3 option.

Table 4.16 Power Supply Ratings for Rescue Operation

Motor Type	Speed Feedback	DC Bus Voltage	Control Circuit Voltage
Induction Motor	Without PG Encoder or Incremental PG Encoder with PG-B3 or PG-X3 option card	200 V class drives: 48 - 340 Vdc 400 V class drives: 48 - 680 Vdc	When supplied from a battery or the drive DC bus: 200 V class drives: 250 - 340 Vdc 400 V class drives: 280 - 680 V (recommended: 500 - 680 Vdc) When supplied via a 24 Vdc control power backup unit: 200 V and 400 V class drives: 24 Vdc
Permanent Magnet Motor	Incremental PG Encoder with PG-X3 option card "*End8*" to "*End10*" error occurs during Initial Magnet Pole Search Auto-Tuning.	200 V class drives: 280 - 340 Vdc 400 V class drives: 560 - 680 Vdc	
	Incremental PG Encoder with PG-X3 option card No error occurs during Initial Magnet Pole Search Auto-Tuning.	200 V class drives: 72 - 340 Vdc 400 V class drives: 144 - 680 Vdc	
	Absolute PG Encoder with PG-F3 or PG-E3 option card	200 V class drives: 48 - 340 Vdc 400 V class drives: 48 - 680 Vdc	

Table 4.17 Location of CN19 Connector for Each Model

Model	Connector Location	Model	Connector Location
2022 - 2041 4012 - 4023	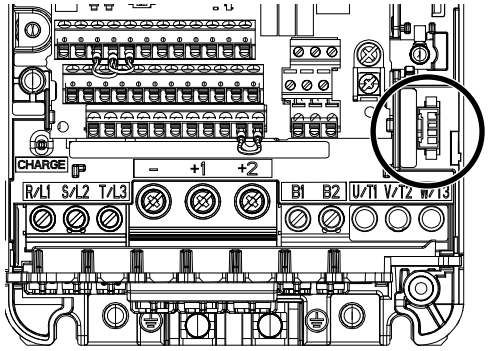	2059 4030 - 4039	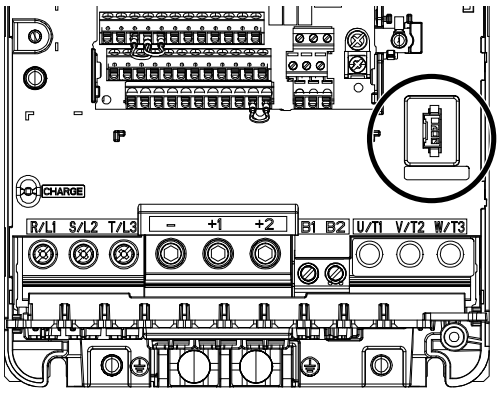
2075 - 2094 4049 - 4056	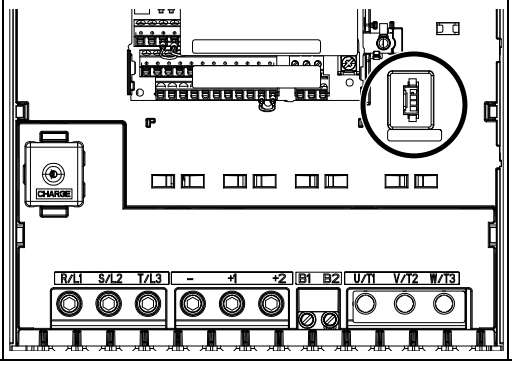	2110 4075	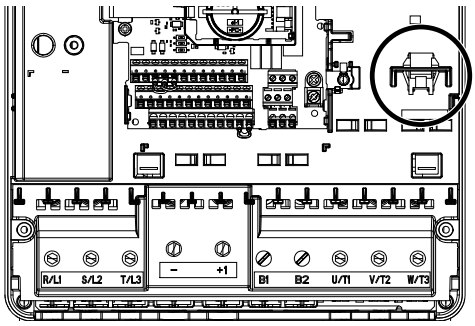

Model	Connector Location	Model	Connector Location
2144 4094 - 4114	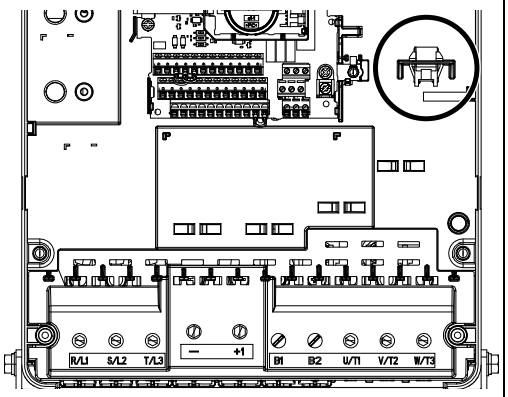	2181 - 2225 4140 - 4188	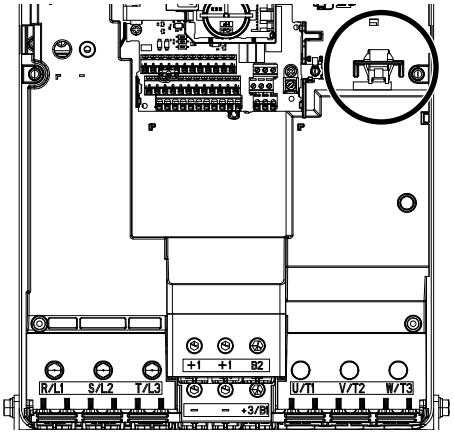
2269 - 2354 4225 - 4325	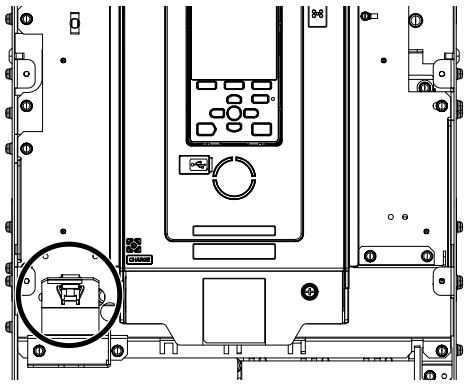	2432 - 2519 4380	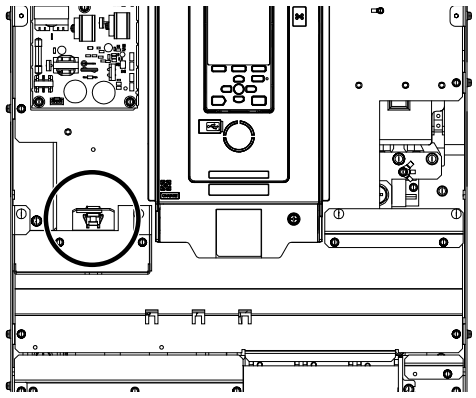

■ Parameter Setup

Adjust drive parameters as described below when using Rescue Operation.

- Select the type of Rescue Operation power supply for the drive main circuit in *S4-06 [Rescue Power Supply Selection]*.
- When using a UPS, set the UPS power value to *S4-07 [UPS Power Rating]*. Use *S4-08 [UPS Speed Limit Selection]* to decide if it is necessary to automatically limit the Rescue Operation speed depending on the UPS power.
- If it is necessary to detect the deterioration of the battery or UPS, also set up *S4-12 [DC Bus Voltage during Rescue]* and *S4-13 [PowerSupply Reduction Lvl@Rescue]*. Use *U1-07 [DC Bus Voltage]* to measure the DC bus voltage during operation using the rescue power supply and set the measured value to *S4-12*. Set the deterioration detection level to *S4-13*.
- Set *S4-01 [Light Load Direction Search Sel]* to *S4-04 [Light Load Search Speed Ref.]* if it is necessary to automatically do light load direction search when Rescue Operation is started.

■ Wiring Examples

Switching the main power supply to a battery or UPS requires magnetic contactors that must be controlled by an external controller. Wiring methods and the sequence used for the magnetic contactors depend on the application. This instruction manual describes the following configurations:

- A single-phase, 200 V UPS is used as backup power supply for a 200 V or 400 V class drive.
- Two separate batteries for the main power and control power supplies. Main power battery voltage is below 250 Vdc for 200 V class drives or 500 Vdc for 400 V class drives.
- Two separate batteries. One is used for the main power supply, a second battery supplies the controller via an optional 24 V Backup Power Supply Unit.
- A single battery with minimum 250 Vdc for 200 V class drives or 500 Vdc for 400 V class drives is used for the main and control power supply.

Select the configuration that matches your application. Follow the corresponding instructions for wiring and drive settings. For configurations not covered in the list above, contact your Yaskawa representative or our sales office directly for consultation.

⚠ DANGER **Electrical Shock Hazard**
Do not examine, connect, or disconnect wiring on an energized drive. Before servicing, disconnect all power to the equipment and wait for the time specified on the warning label at a minimum. The internal capacitor stays charged after the drive is de-energized. The charge indicator LED extinguishes when the DC bus voltage decreases below 50 Vdc. When all indicators are OFF, remove the covers before measuring for dangerous voltages to make sure that the drive is safe.
If you do work on the drive when it is energized, it will cause serious injury or death from electrical shock.

NOTICE **Damage to Equipment**
Thoroughly read the instructions for wiring and magnetic contactor sequence described in this section before you set up the drive for Rescue Operation.
If you do not follow these instructions, it can cause damage to the drive.

NOTICE **Damage to Equipment**
Do not use the Rescue Operation function for long lengths of time.
The low DC bus voltage during Rescue Operation can stop the internal cooling fans of the drive. If you use the Rescue Operation function for a long length of time, it can trigger an *oH [Heatsink Overheat]* fault and can cause damage to the drive.

NOTICE **Damage to Equipment**
Install the inrush current suppression circuit outside the drive if the DC bus battery voltage is lower than 190 Vdc for 200 V class drives of models 2269 to 2519 and 380 Vdc for 400 V class drives of models 4188 to 4380.
If you do not install the inrush current suppression circuit outside the drive, it can cause the soft-charge bypass relay to stay open and cause damage to the drive.

■ Using a Single-Phase UPS (Uninterruptable Power Supply)

A UPS of 200 V or more is available for this drive.

Note:
The maximum voltage of the UPS must be less than the value of "Rated Voltage, Rated Frequency" shown in *Model Specifications (Three-Phase 200 V Class) on page 399* and *Model Specifications (Three-Phase 400 V Class) on page 401*.

Follow the instructions when you use a single-phase 200 V UPS for Rescue Operation. You can use a 200 V UPS for 200 V and 400 V class drives.

Wiring

Refer to Figure 4.22 for a wiring diagram.

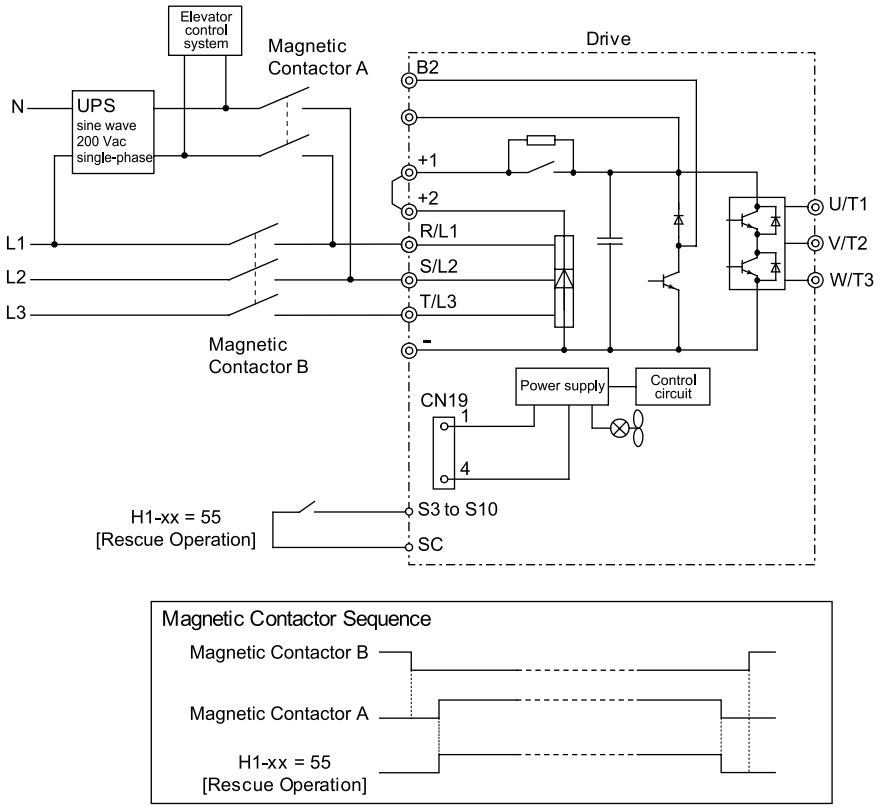

Figure 4.22 Using a Single-Phase 200 V UPS

Application Precautions

The drive can detect a control power supply fault (*Uv2*) if the UPS cannot provide enough voltage, or if the Light Load Direction Search is not set correctly. If this problem occurs, take these corrective actions:

Corrective Action

- Use a separate battery for the controller power supply.
- Use a battery with a voltage higher than 250 Vdc for 200 V class drives or 500 Vdc for 400 V class drives and connect it to the control power supply input (CN19). Alternatively, use a 24 Vdc battery and an optional 24 V Backup Power Supply Unit.
- Set *S4-01 = 1 [Light Load Direction Search Sel = Enabled for Motor 1 and Motor 2]*.

Operation Sequence

- **Starting Rescue Operation**
  1. Open contactor B.
  2. Activate the MFDI terminal set for *H1-xx = 55 [Rescue Operation]*.
  3. Close contactor A.
  4. Set the Up/Down command.
- **Ending Rescue Operation**
  1. After the elevator car stops, open contactor A.
  2. Deactivate the MFDI terminal set for *H1-xx = 55 [Rescue Operation]*.
  3. Close contactor B to return to operation with normal power supply.

■ Using Separate Batteries for DC Bus and Control Power Supply, DC Bus Battery under 250 Vdc (500 Vdc)

Follow these instructions when you use separate batteries for Rescue Operation with the battery for the DC bus having a lower voltage than 250 Vdc for 200 V class drives and 500 Vdc for 400 V class drives.

Follow the wiring diagram shown in Figure 4.23 to Figure 4.25.

Wiring for 2022 to 2225 and 4012 to 4140

Refer to Figure 4.23 for a wiring diagram when DC Bus Battery is less than 250 Vdc.

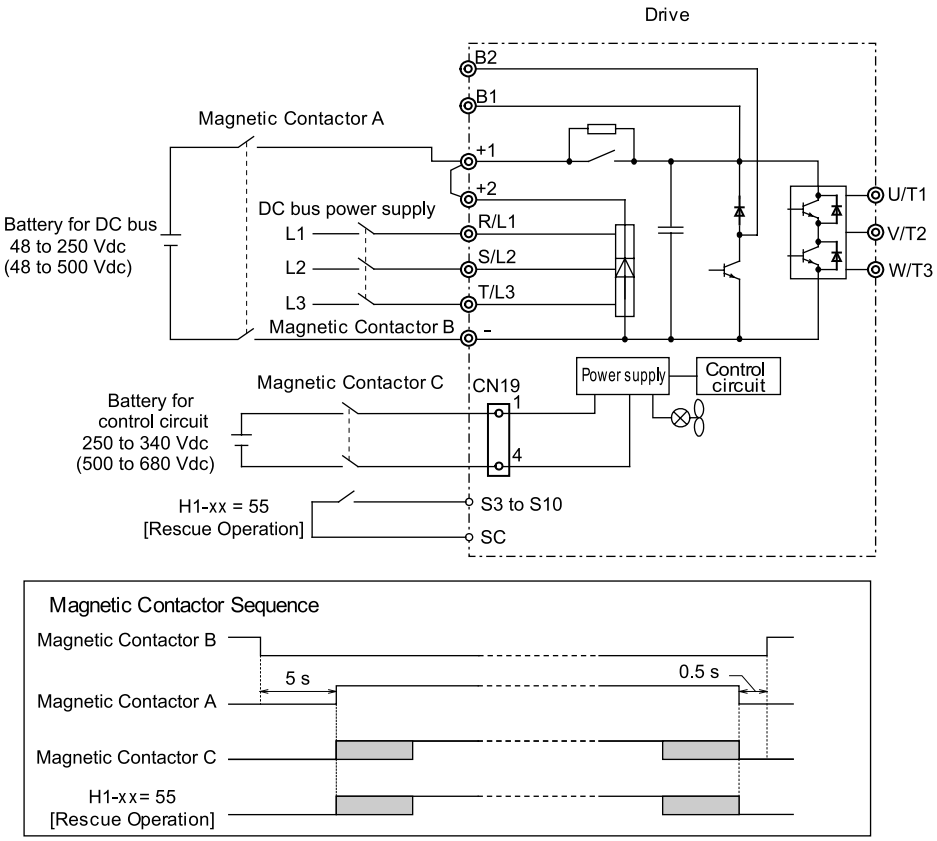

Figure 4.23 Wiring Two Batteries for DC Bus and Control Power Supply

Operation Sequence

- **Starting Rescue Operation**
  1. Open contactor B and wait at least 5 seconds.
  2. Activate the MFDI terminal set for *H1-xx = 55 [Rescue Operation]*.
  3. Close contactors A and C.
  4. Set the Up/Down command.
- **Ending Rescue Operation**
  1. After the elevator car stops, open contactors A and C.
  2. Deactivate the MFDI terminal set for *H1-xx = 55 [Rescue Operation]*.
  3. Wait at least 0.5 s and then close contactor B to return to operation with normal power supply.

Wiring for 2269 to 2519 and 4188 to 4380

- **Voltage Lower Than 48 Vdc to 190 Vdc for 200 V Class Drives, 96 Vdc to 380 Vdc for 400 V Class Drives**

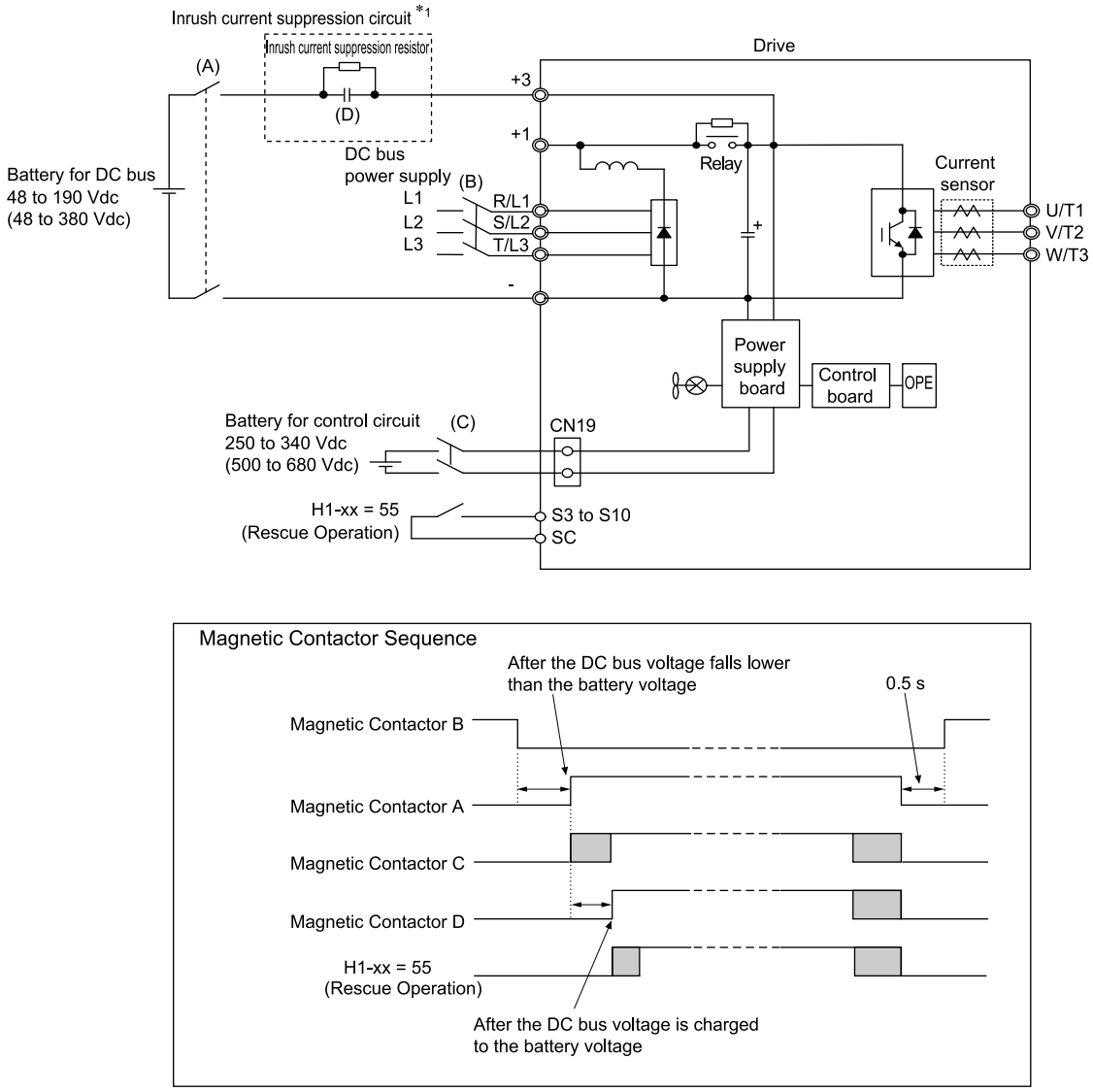

Figure 4.24 Voltage Lower Than 48 Vdc to 190 Vdc for 200 V Class Drives, 96 Vdc to 380 Vdc for 400 V Class Drives

*1 Install the inrush current suppression circuit outside the drive if the DC bus battery voltage is lower than 190 Vdc for 200 V class drives and 380 Vdc for 400 V class drives. Failure to obey will cause the soft-charge bypass relay to stay open and will cause damage to the drive.

Refer to the following table to install the inrush current suppression circuit for the battery.

Table 4.18 Installation of the Inrush Current Suppression Circuit for Battery

Voltage	Drive Model	Resistor	Relay
200 V	2269	1.0 Ω, 80 W	*2*
	2354	1.0 Ω, 80 W	
	2432	1.0 Ω, 80 W	
	2519	1.0 Ω, 80 W	
400 V	4188	1.0 Ω, 120 W	
	4225	1.0 Ω, 220 W	
	4270	1.0 Ω, 220 W	
	4325	1.0 Ω, 220 W	
	4380	1.0 Ω, 220 W	

*2 Select the appropriate relay referring to the following calculation, even if the battery voltage or main power current is applied.

$$\text{Load current of battery (A)} = \frac{\text{Motor rated power (kW)} \times \text{Operation frequency when running battery (Hz)} \times 2 \times 1000}{\text{Battery voltage (Vdc)} \times 0.6\ \text{(Motor efficiency)} \times \text{Motor rated frequency (Hz)}}$$

- **Voltage Lower Than 190 Vdc to 340 Vdc for 200 V Class Drives, 380 Vdc to 680 Vdc for 400 V Class Drives**

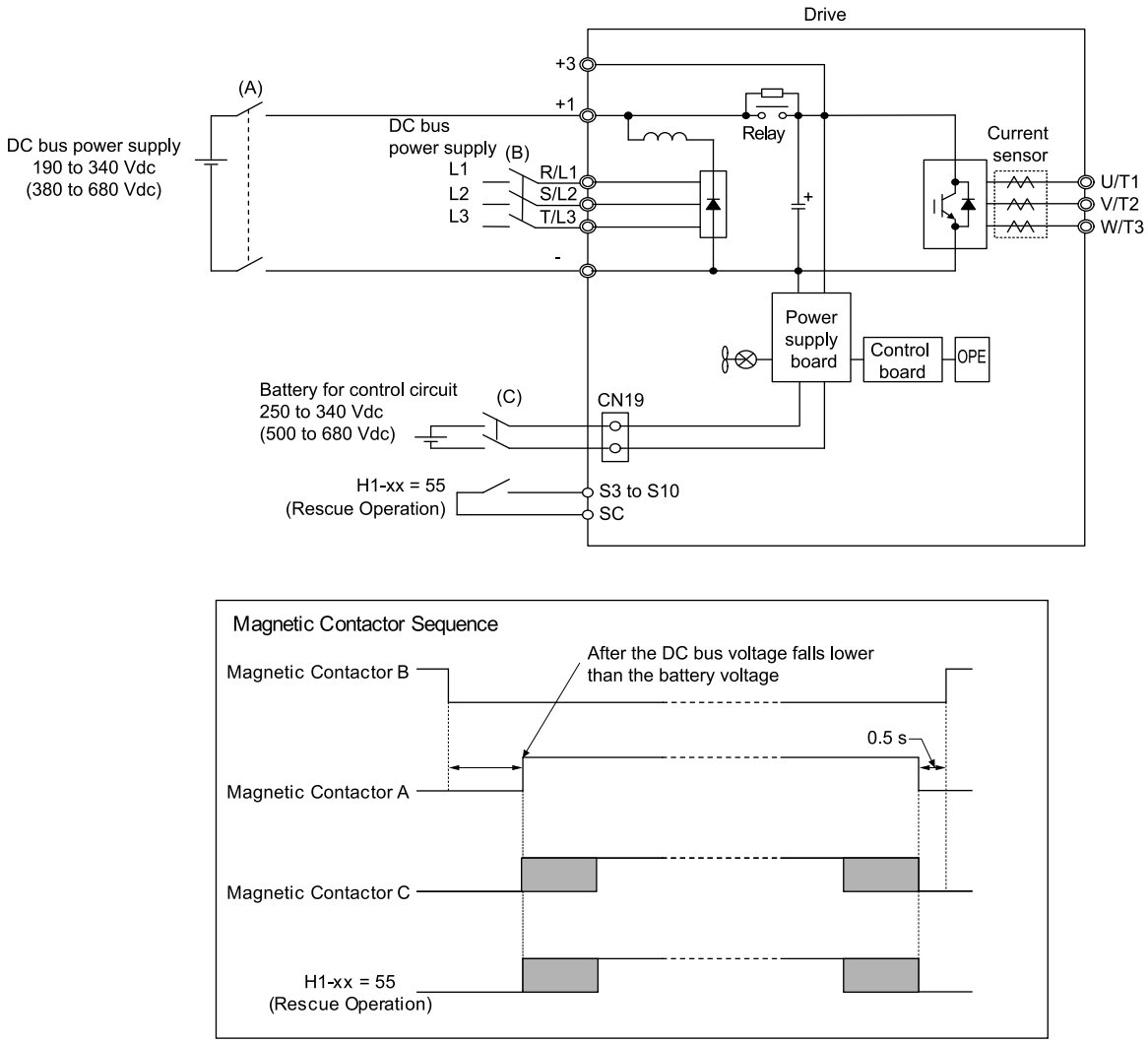

Figure 4.25 Voltage Lower Than 190 Vdc to 340 Vdc for 200 V Class Drives, 380 Vdc to 680 Vdc for 400 V Class Drives

■ Using a Battery for the DC Bus and 24 V Power Supply Unit Option for the Control Circuit

Follow the instructions when you use a 24 V Power Supply Unit option for the control circuit and a battery for the main circuit. The main circuit battery voltage must be higher than 48 Vdc for 200 V class drives and higher than 96 Vdc for 400 V class drives.

Yaskawa offers a 24 V Power Supply Option for the control circuit that is useful in applications where you are unable to connect to a backup battery greater than 250 V. Follow the wiring diagram shown in Figure 4.26 to Figure 4.28. For a more detailed explanation of the 24 V Power Supply Option, refer to the manual provided with the option.

Note:

Use the bracket to install a 24 V Power Supply Unit option to the drive. For more information about the bracket and installations, refer to “Yaskawa AC Drive Option 24 V Power Supply Bracket Installation Manual (TOBPC72060016)”.

Wiring for 2022 to 2225 and 4012 to 4140

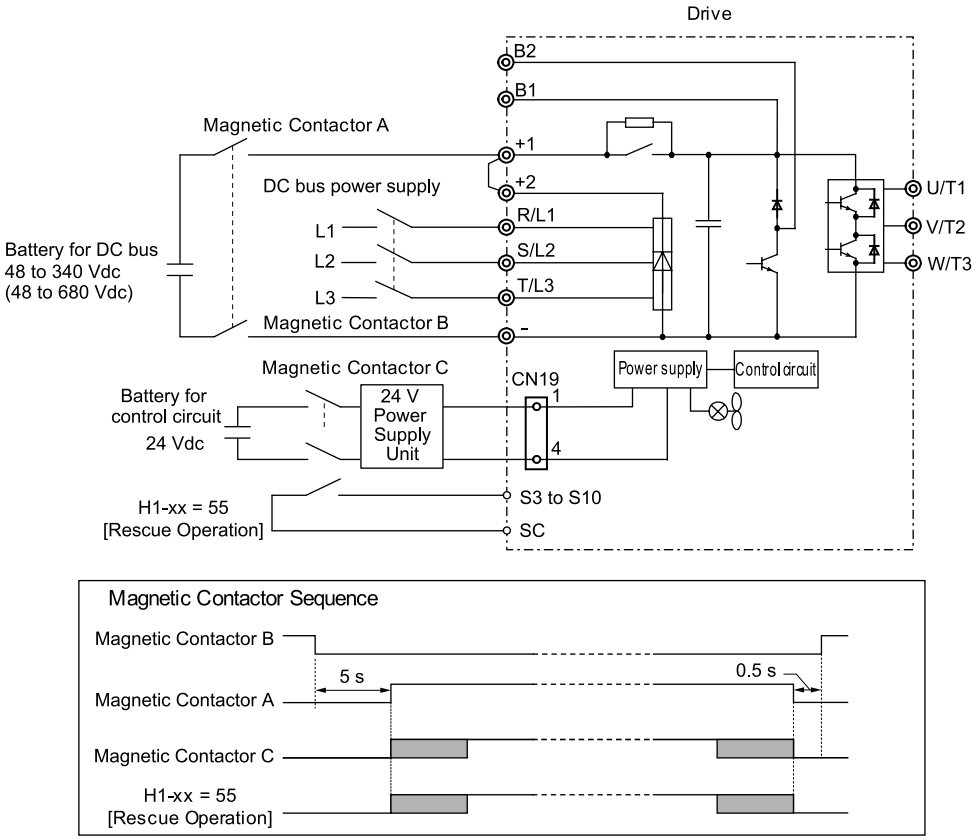

Figure 4.26 Using a Battery for the DC Bus and 24 V Power Supply Unit Option for the Control Circuit

Operation Sequence

- **Starting Rescue Operation**
  1. Open contactor B and wait at least 5 seconds.
  2. Activate the MFDI terminal set for *H1-xx = 55 [Rescue Operation]*.
  3. Close contactors A and C.
  4. Set the Up/Down command.
- **Ending Rescue Operation**
  1. After the elevator car stops, open contactors A and C.
  2. Deactivate the MFDI terminal set for *H1-xx = 55 [Rescue Operation]*.
  3. Wait at least 0.5 s and then close contactor B to return to operation with normal power supply.

Wiring for 2269 to 2519 and 4188 to 4380

- **Voltage Lower Than 48 Vdc to 190 Vdc for 200 V Class Drives, 96 Vdc to 380 Vdc for 400 V Class Drives**

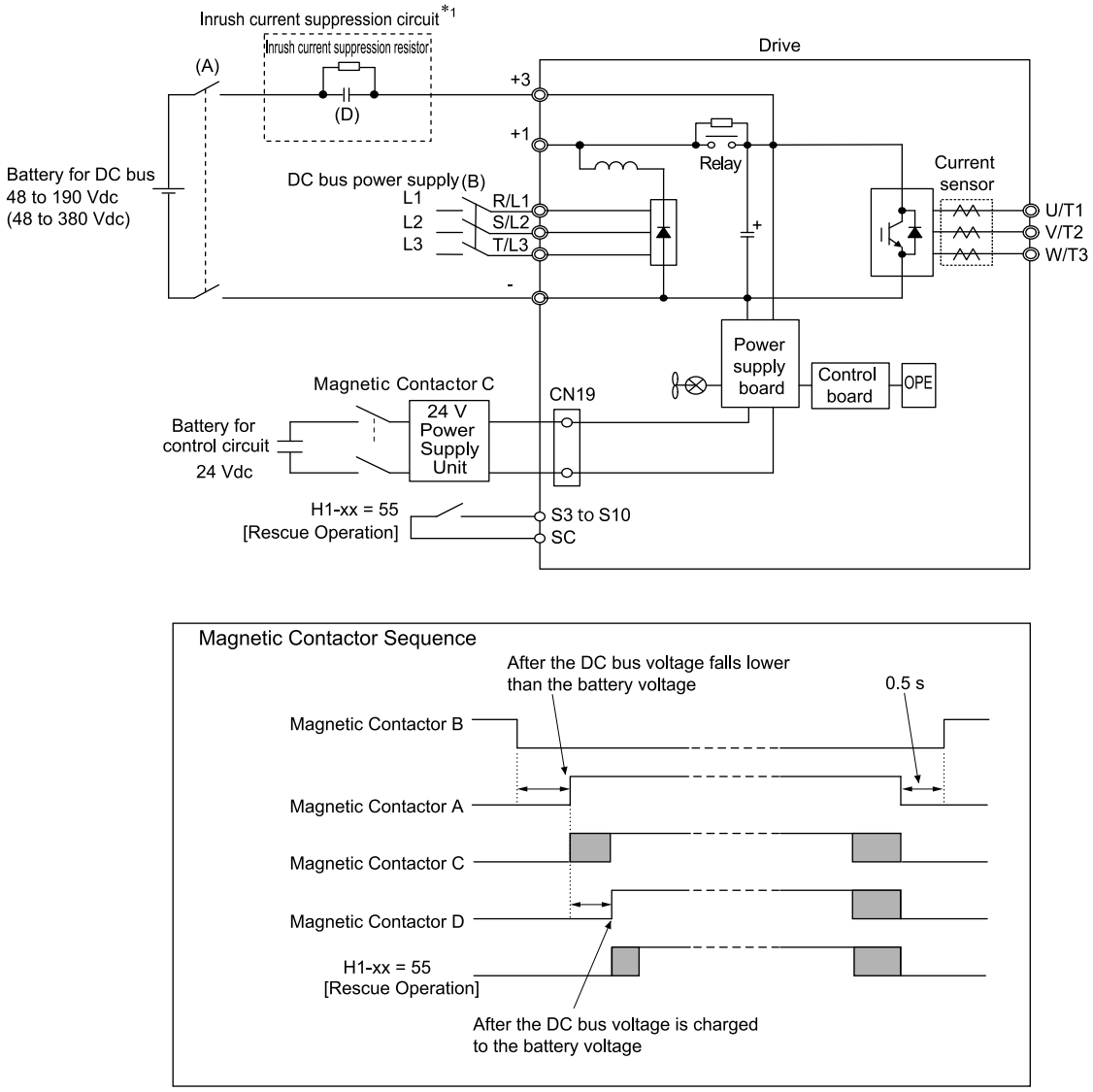

Figure 4.27 Using a Battery for the DC Bus and 24 V Power Supply Unit Option for the Control Circuit

*1 Install the inrush current suppression circuit outside the drive if the DC bus battery voltage is lower than 190 Vdc for 200 V class drives and 380 Vdc for 400 V class drives. Failure to obey will cause the soft-charge bypass relay to stay open and will cause damage to the drive.

Refer to Table 4.18 for the installation of the inrush current suppression circuit for the battery.

- **Voltage Lower Than 190 Vdc to 250 Vdc for 200 V Class Drives, 380 Vdc to 500 Vdc for 400 V Class Drives**

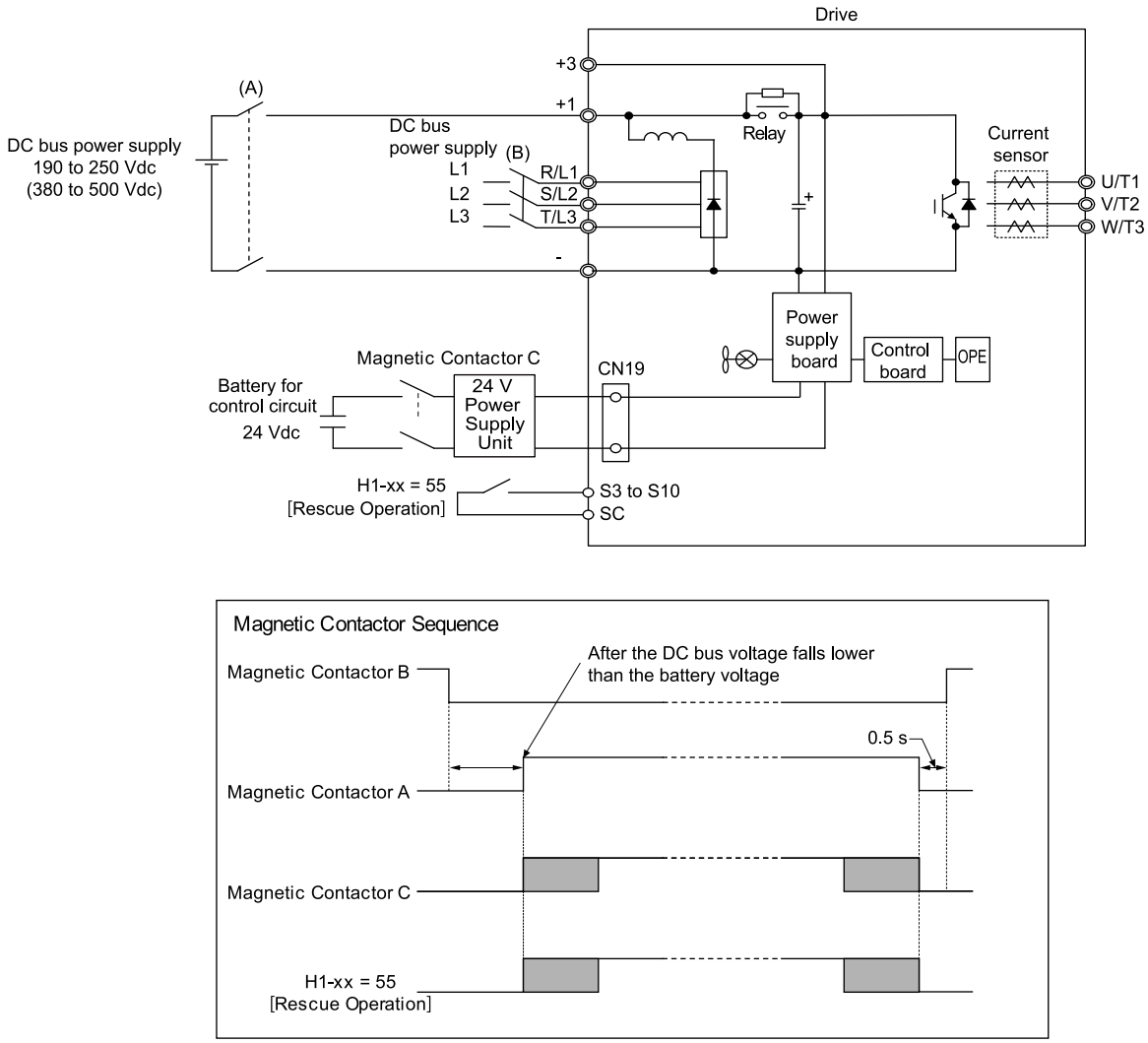

Figure 4.28 Voltage Lower Than 190 Vdc to 250 Vdc for 200 V Class Drives, 380 Vdc to 500 Vdc for 400 V Class Drives

■ Using a Single Battery with Minimum 250 Vdc (500 Vdc)

Follow the instructions when using one battery to supply the main circuit and controller. The battery voltage must be at least 250 Vdc for 200 V class drives or 500 Vdc for 400 V class drives.

Wiring

Refer to Figure 4.29 for a wiring diagram.

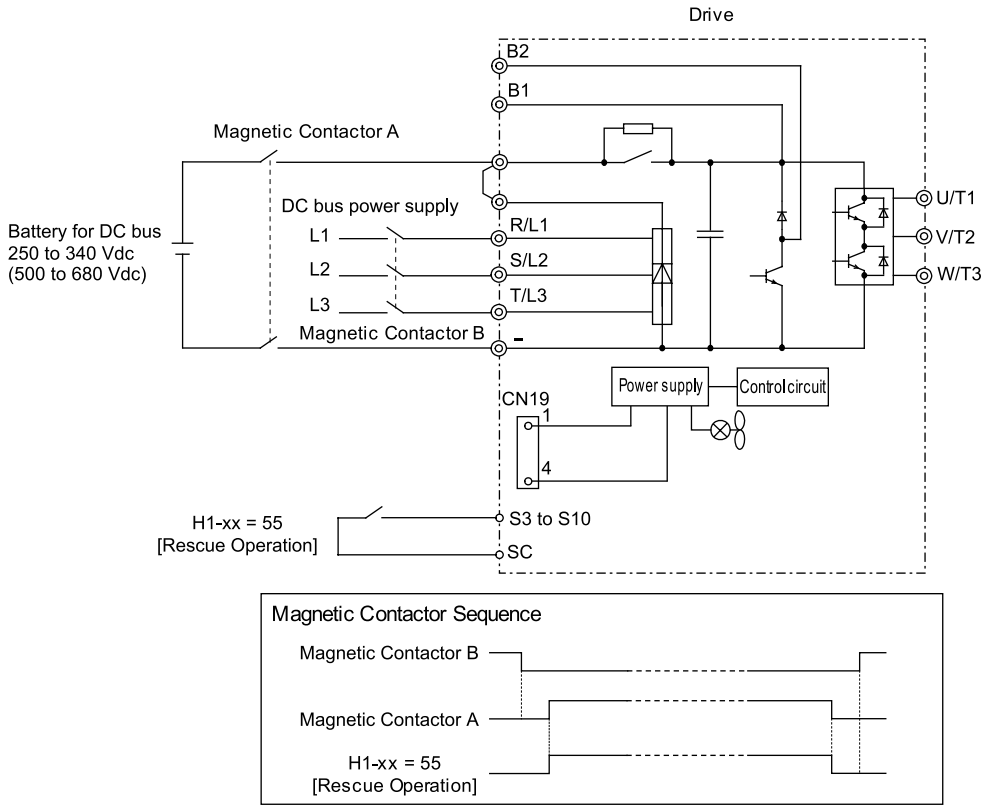

Figure 4.29 Using a Single Battery with Minimum 250 Vdc (500 Vdc)

Operation Sequence

- **Starting Rescue Operation**
  1. Open contactor B.
  2. Activate the MFDI terminal set for *H1-xx = 55 [Rescue Operation]*.
  3. Close contactor A.
  4. Set the Up/Down command.
- **Ending Rescue Operation**
  1. After the elevator car stops, open contactor A.
  2. Deactivate the MFDI terminal set for *H1-xx = 55 [Rescue Operation]*.
  3. Close contactor B to return to operation with normal power supply.

■ Rescue Operation Torque Limit

The Torque Limit During Rescue Operation is set in *S4-05 [Rescue Operation Torque Limit]*. After Rescue Operation is complete, the drive uses the torque limits set in the L7 parameters.

■ Light Load Direction Search Function

You can use Light Load Direction Search to automatically do Rescue Operation in the direction with the lower load. It can help to reduce the amount of power required by the backup power supply necessary for Rescue Operation. You can set the drive to automatically do Light Load Direction Search when Rescue Operation is started. To enable Light Load Direction Search, set *S4-01 = 1 [Light Load Direction Search Sel = Enabled for Motor 1 and Motor 2]*.

When Light Load Direction Search is enabled, the drive first runs in the up and then in the down direction, each for the time set to *S4-03 [Light Load Direction Search Time]*. It then compares the load condition of both operations and travels to the next floor using the lighter load condition direction. You can set the speed reference used for Light Load Direction Search in *S4-04 [Light Load Search Speed Ref.]*.

- When the lightest load direction is up, the drive stops after Light Load Direction Search and then accelerates upwards to the Rescue Operation speed set in *S4-15 [Rescue Speed Reference Selection]*. The MFDO terminals set for *H2-xx = 54 [Light Load Direction]* and *H2-xx = 55 [Light Load Detection Active]* will close.

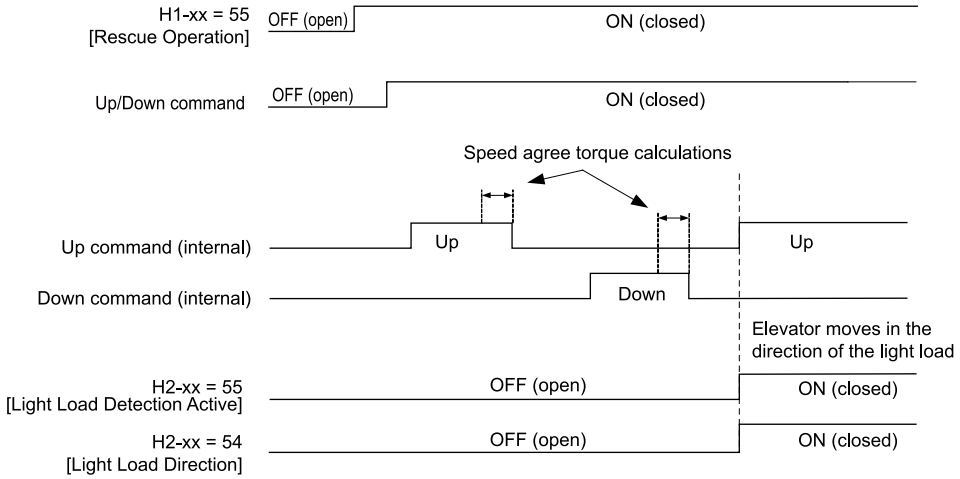

Figure 4.30 Light Load Direction Detection (Up)

- When the lightest direction is down, after Light Load Direction Detection is finished, the drive immediately accelerates to the Rescue Operation speed set in *S4-15* without stopping. An MFDO terminal set for *H2-xx = 54* will stay open, and an MFDO terminal set for *H2-xx = 55* will close.

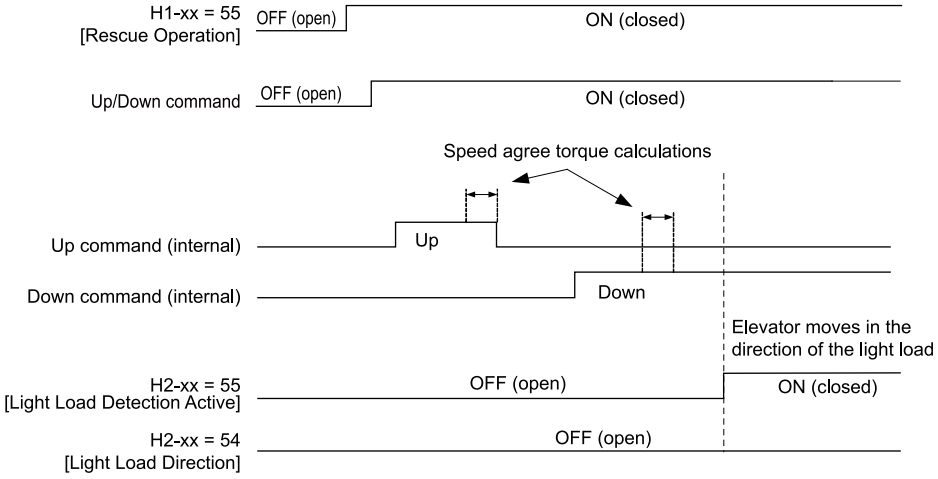

Figure 4.31 Light Load Direction Detection (Down)

Advanced Light Load Search

When *S4-01 = 3 [Light Load Direction Search Sel = Enabled - Advanced]*, the drive does not move the elevator car up and down to detect the light load direction.

This function prevents a too much discharge of the UPS and battery during Light Load Search operation.

Note:
- When you set *S4-01 = 3*, Yaskawa recommends at least a full up/down travel with empty elevator car for calibration.
- To reset the calibration, set *S4-01 = 0 [Disabled]*. You can also reset the calibration when you use *A1-03 [Initialize Parameters]*.
- Yaskawa recommends that you reset the function if the elevator mechanical or electrical specifications or usage conditions change.

◆ Brake Response Monitor

Lifts must have a system independent of the drive control to prevent unintended car movement (UCM) away from the stop with open doors. This protection device must have the following three functions:

- Recognition
- Stopping
- Braking

By duplicating the brake of drive motors for lifts, the brake acts as the “braking function” of the UCM-device. In this case, the status of the brake function must be monitored. With a brake response monitor (BRM) function, the motor brake and the drive can act as parts of the UCM protective device.

■ Brake Response Monitor (BRM) Function

The BRM function is used for:

- Monitoring the brake status with an Up or Down command
- Monitoring the correct switching of the brake within a defined time
- Halting the operation sequence if a failure is detected when monitoring.

Enabling and Disabling the BRM Function

The BRM function is disabled at the default setting.

Do these steps to enable the BRM function.

1. Set *S6-07 = 1 [Brake Response Monitor Function = Enabled]* to enable the BRM function.
   Refer to *S: Elevator Parameters on page 685* for more information about settings.
2. Set the same function to two MFDI terminals (*H1-xx*). The function to set is either *H1-xx = 79 [Brake Feedback N.O.]* or *H1-xx = 5B [Brake Feedback N.C.]*.
   (for example *H1-08 = 79* and *H1-09 = 79*)
   Set *Brake Feedback N.O.* or *Brake Feedback N.C.* to the MFDI terminals to match the motor brake signals.

Note:

If you use one of these settings for the MFDI terminals when *S6-07 = 1*, the drive detects an *oPE03 [Multi-Function Input Setting Err]*:
- *H1-xx = 79* or *H1-xx = 5B* are not set to any MFDI terminals.
- *H1-xx = 79* is set to only one MFDI terminal.
- *H1-xx = 5B* is set to only one MFDI terminal.
- *H1-xx = 79* and *H1-xx = 5B* are each set to two MFDI terminals.
- *H1-xx = 79* or *H1-xx = 5B* is set to three or more MFDI terminals.

Wiring

Figure 4.32 is a wiring example when you use BRM function.

Install two brakes to motors.

Figure 4.32 shows the state in which two brakes on motors have two Normally Open (N.O.) switches and when you set two MFDI terminals to *H1-08 = 79 [Terminal S8 Function Selection = Brake Feedback N.O.]* and *H1-09 = 79 [Terminal S9 Function Selection = Brake Feedback N.O.]*. In this wiring example, the brakes have two Normally Open (N.O.) switches, but you can also use Normally Closed (N.C.) switches for operation. Set functions to two MFDI terminals to match the motor brake signals.

When the motor brakes close, the terminals close. This causes “Brake Feedback N.O.” that is set to the MFDI terminals used to monitor the brake function (for example S8 and S9) to change its signal and unlock the drive, which lets the operation sequence start.

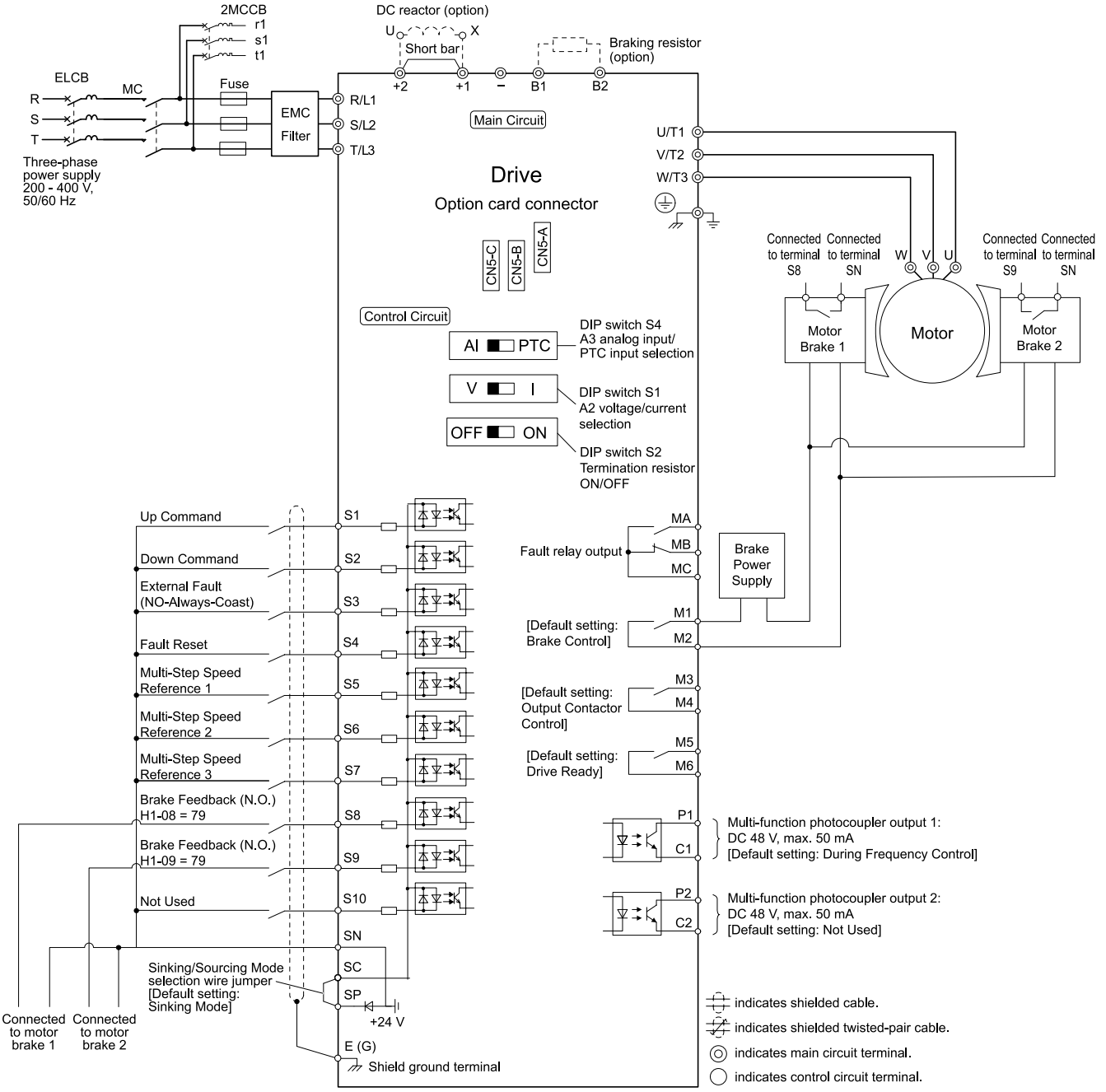

Figure 4.32 Connection Diagram to Use BRM Function

■ SE4 Fault Detection/Fault Reset for the BRM Function

Fault Detection

Note:

When *H1-xx = 5B [Brake Feedback N.C.]* is set to the MFDI terminal, the *SE4 [Brake Response Error]* detection condition will not be *H1-xx = 79 [Brake Feedback N.O.]*, it will be *H1-xx = 5B*.

- If these conditions occur during the time set in *S6-05 [BrakeSet Error(SE4) DetectDelayT]* when the drive starts or while stopped, the drive detects an *SE4* and it cannot do the operation sequence:
  - The state of these signals (release/close) do not agree: one MFDO terminal set for *H2-xx = 50 [Brake Control]* and one of two MFDI terminals set for *H1-xx = 79*.
  - The state of these signals (release/close) do not agree: one MFDO terminal set for *H2-xx = 50* and both two MFDI terminals set for *H1-xx = 79*.
- If these conditions continue after the time set in *S6-06 [SE4 Detection Time During Run]* passes during run, the drive detects an *SE4* and it cannot do the operation sequence:
  - The state of these signals (release/close) do not agree: one MFDO terminal set for *H2-xx = 50* and one of two MFDI terminals set for *H1-xx = 79*.

– The state of these signals (release/close) do not agree: one MFDO terminal set for *H2-xx = 50* and both two MFDI terminals set for *H1-xx = 79*.

Fault Reset

When *S6-07 = 1 [Brake Response Monitor Function = Enabled]*, the only method to reset the *SE4* fault is to set *S6-08 = 1 [SE4 Fault Reset = Enabled]*. You cannot use these methods to reset the fault:

- Method 1 to Method 3 explained in *Fault Reset on page 348*
- Using *L5-xx [Automatic Fault Reset]* parameters

Note:

If the drive detects *SE4* fault when *S6-07 = 1*, make sure that motor brake and brake feedback signal are operating normally before you try to reset the *SE4* fault.

■ Brake Response Monitor Operation

Normal Operation

At start (when the Up/Down command is enabled), the brake release command is activated (brake open) after the time set to *S1-06 [Brake Release Delay Time]* passes. If the brake release command is activated, the drive monitors the switching status to make sure that both the MFDI terminals set for *Brake Feedback N.O.* of motor brake 1 and *Brake Feedback N.O.* of motor brake 2 are operating normally (brake open) within the time set in *S6-05 [BrakeSet Error(SE4) DetectDelayT]*.

Note:

When the two MFDI terminals are set to *H1-xx = 79 [Brake Feedback N.O.]*, both the input terminals set for *Brake Feedback N.O.* of motor brake 1 and *Brake Feedback N.O.* of motor brake 2 are open within the time set in *S6-05*. When the two MFDI terminals are set to *H1-xx = 5B [Brake Feedback N.C.]*, both the terminals are closed within the time set to *S6-05*.

At stop (when the Up/Down command is disabled), the brake release command is not activated (brake closed) after the time set to *S1-07 [Brake Close Delay Time]* has passed. If the brake release command is not activated, the drive monitors the switching status to make sure that both the MFDI terminals set for *Brake Feedback N.O.* of motor brake 1 and *Brake Feedback N.O.* of motor brake 2 are operating normally (brake closed) within the time set in *S6-05*.

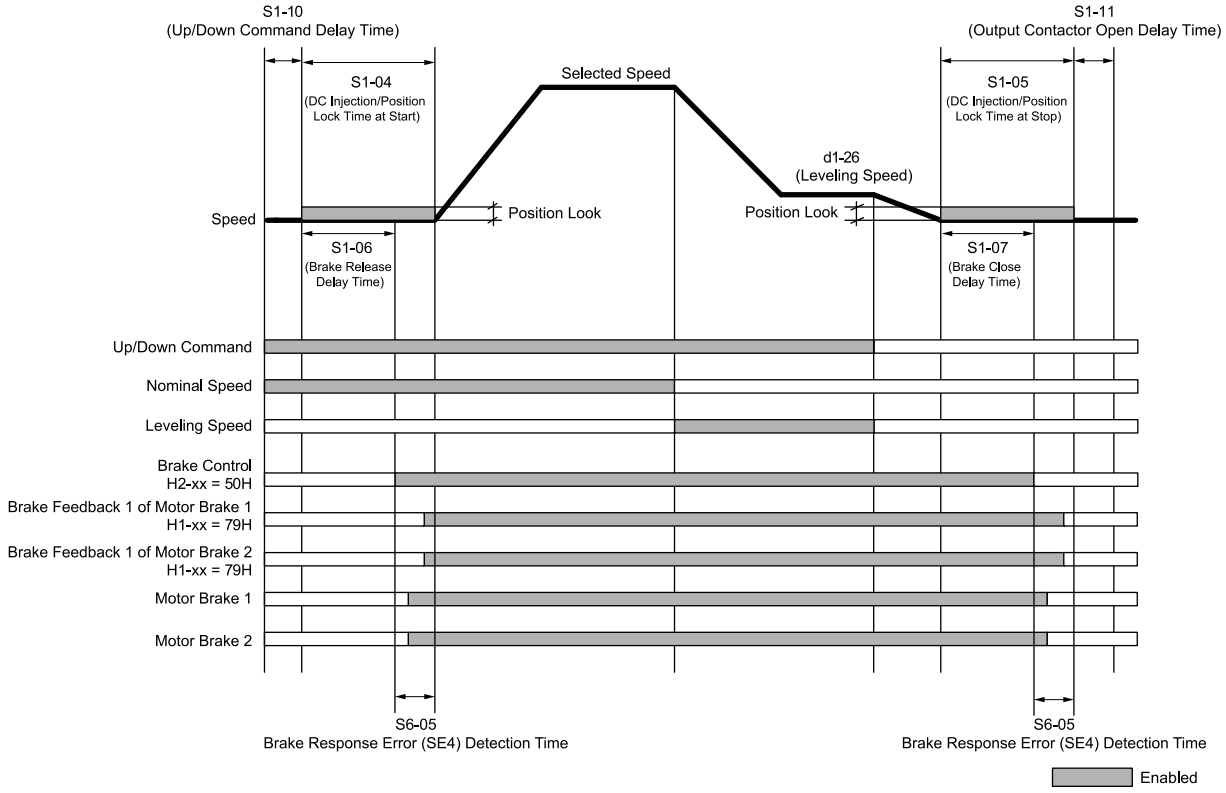

Figure 4.33 Normal Operation with MFDIs Set to H1-xx = 79 (N.O.)

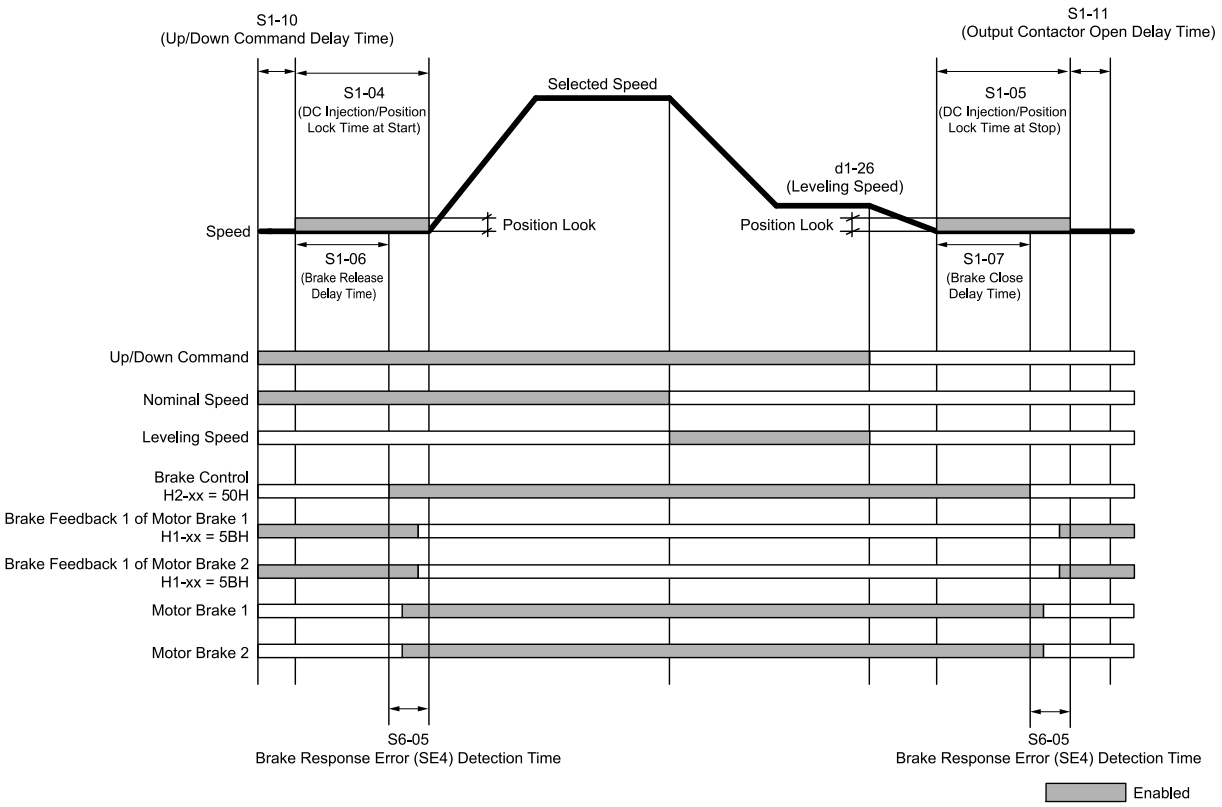

Figure 4.34 Normal Operation with MFDIs Set to H1-xx = 5B (N.C.)

Fault Operation during Start or Stop

Note:

When *H1-xx = 5B [Brake Feedback N.C.]* is set to the MFDI terminal, the *SE4 [Brake Response Error]* detection condition will not be *H1-xx = 79 [Brake Feedback N.O.]*, it will be *H1-xx = 5B*.

If these conditions occur during the time set in *S6-05 [BrakeSet Error(SE4) DetectDelayT]* when the drive starts or while stopped, the drive detects an *SE4* and it cannot do the operation sequence:

- The state of these signals (release/close) do not agree: one MFDO terminal set for *H2-xx = 50 [Brake Control]* and one of two MFDI terminals set for *H1-xx = 79*.
- The state of these signals (release/close) do not agree: one MFDO terminal set for *H2-xx = 50* and both two MFDI terminals set for *H1-xx = 79*.

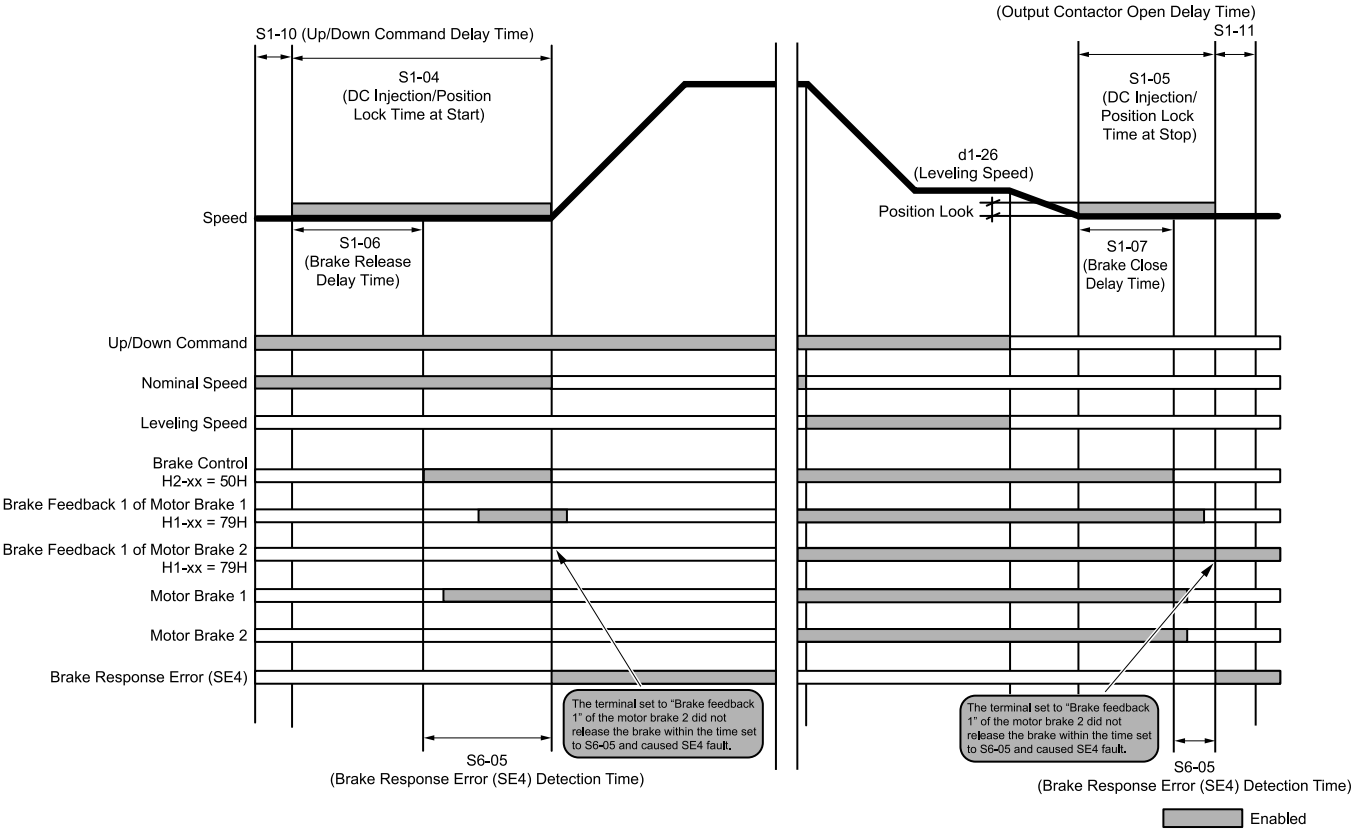

Figure 4.35 Fault Operation during Start (Left) and Fault Operation during Stop (Right)

Fault Operation during Run

Note:

When *H1-xx = 5B [Brake Feedback N.C.]* is set to the MFDI terminal, the *SE4 [Brake Response Error]* detection condition will not be *H1-xx = 79 [Brake Feedback N.O.]*, it will be *H1-xx = 5B*.

If these conditions continue after the time set in *S6-06 [SE4 Detection Time During Run]* passes during run, the drive detects an *SE4* and it cannot do the operation sequence:

- The state of these signals (release/close) do not agree: one MFDO terminal set for *H2-xx = 50* and one of two MFDI terminals set for *H1-xx = 79*.
- The state of these signals (release/close) do not agree: one MFDO terminal set for *H2-xx = 50* and both two MFDI terminals set for *H1-xx = 79*.

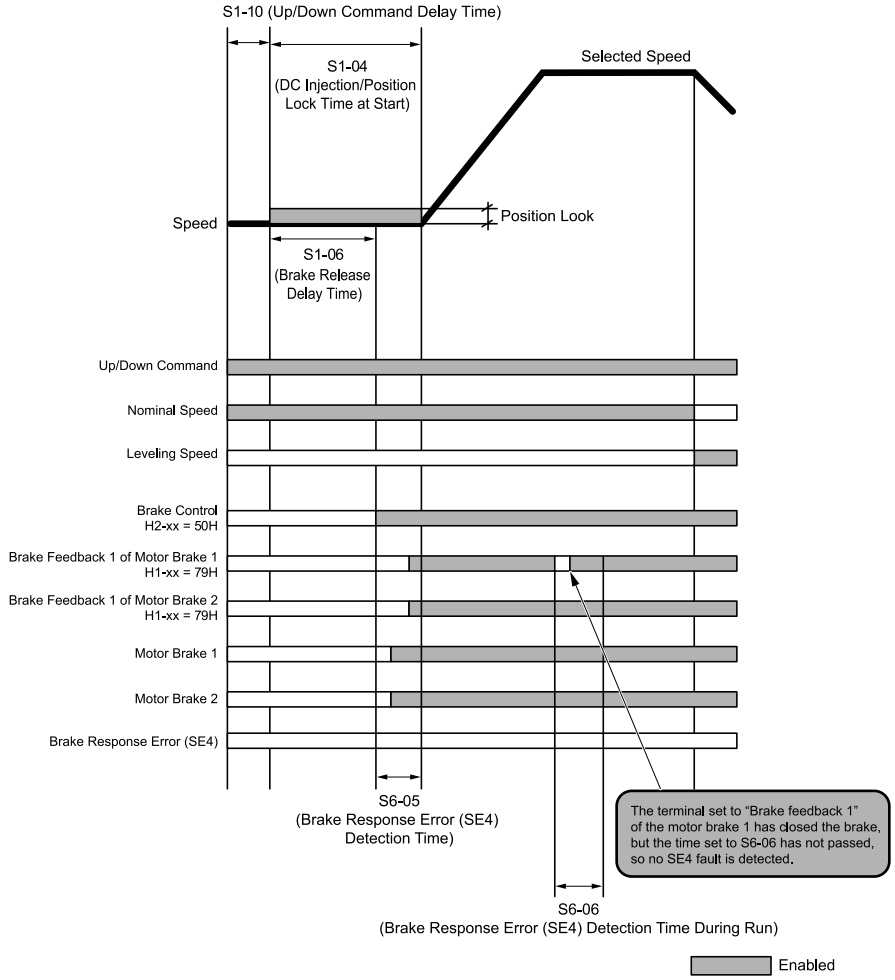

Figure 4.36 Momentary Power Loss of Brake Feedback 1 Input during Run

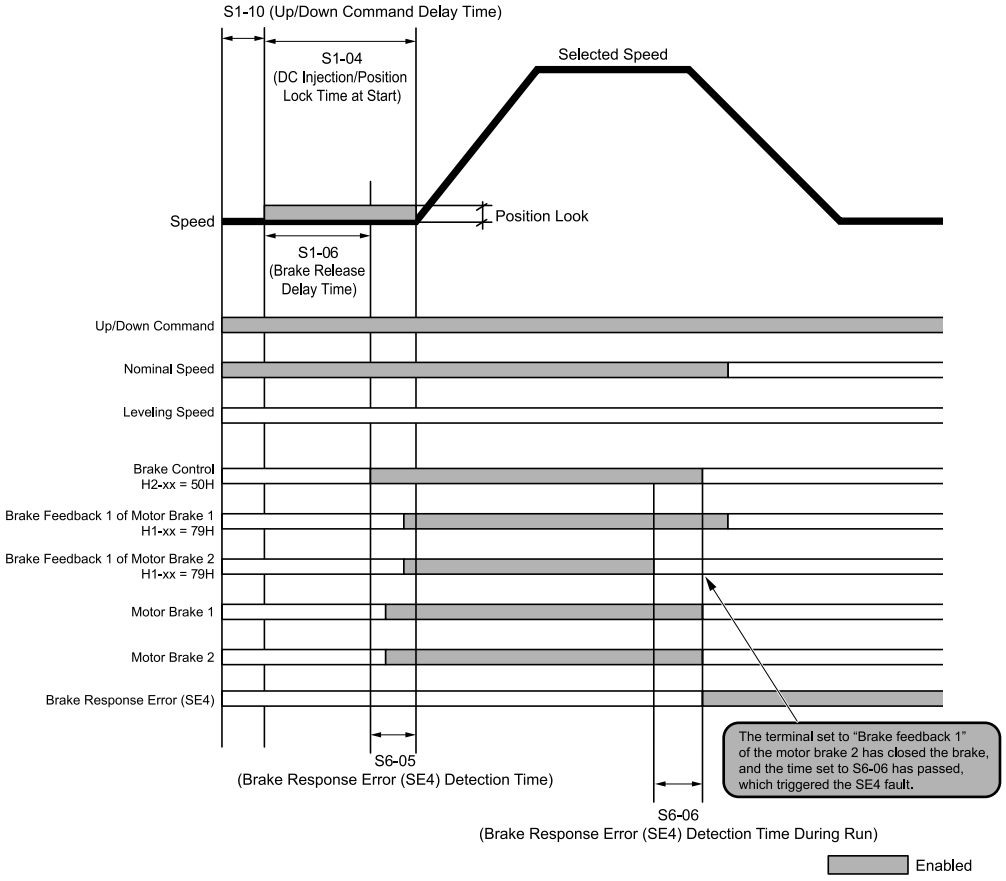

Figure 4.37 Fault Operation during Run

■ Brake Response Monitor Function Test

When you use the BRM function, make sure to do these tests before you start the operation.

Function Test for Normally Open (N.O.) Terminals

Do these steps to do the function test for Normally Open (N.O.) terminals.

1. Remove the signal line connected to motor brake 1 from the MFDI terminal (for example input terminal S7) set to *H1-xx = 79 [Brake Feedback N.O.]*.
2. Enter an Up/Down command.
   After the drive starts and the time set in *S6-05 [BrakeSet Error(SE4) DetectDelayT]* passes, the drive detects *SE4 [Brake Response Error]* and stops operation.

   Note:
   The drive will not reset the *SE4* fault when you input a *Fault Reset* signal or re-energize the drive.
3. Reconnect the signal line for motor brake 1 to the MFDI terminal (for example input terminal S7) set to *H1-xx = 79*.
4. Enter the Up/Down command again to make sure that the drive will not start before the *SE4* fault is reset.
5. Set *S6-08 = 1 [SE4 Fault Reset = Enabled]* to reset the *SE4* fault.

   Note:
   After you reset the *SE4* fault, the setting value of *S6-08* will automatically return to 0.
6. Enter the Up/Down command again to make sure that the drive operates normally.

Also do the function test for Normally Open (N.O.) terminals with the brake feedback of motor brake 2.

Function Test for Normally Closed (N.C.) Terminals

Do these steps to do the function test for Normally Closed (N.C.) terminals.

1. Remove the signal line connected to motor brake 1 from the MFDI terminal (for example input terminal S7) set to *H1-xx = 5B [Brake Feedback N.C.]*.
2. Enter an Up/Down command.
   After the drive starts and the time set in *S6-05 [BrakeSet Error(SE4) DetectDelayT]* passes, the drive detects *SE4 [Brake Response Error]* and stops operation.

Note:
The drive will not reset the *SE4* fault when you input a *Fault Reset* signal or re-energize the drive.

3. Reconnect the signal line for motor brake 1 to the MFDI terminal (for example input terminal S7) set to *H1-xx = 5B*.
4. Enter the Up/Down command again to make sure that the drive will not start before the *SE4* fault is reset.
5. Set *S6-08 = 1 [SE4 Fault Reset = Enabled]* to reset the *SE4* fault.

Note:
After you reset the *SE4* fault, the setting value of *S6-08* will automatically return to 0.

6. Enter the Up/Down command again to make sure that the drive operates normally.

Also do the function test for Normally Closed (N.C.) terminals with the brake feedback of motor brake 2.

■ How to Check the Motor Brake and the Brake Feedback

Check these items:

- Check that the motor brake is operating correctly.
- Check that the motor brake terminal status is normal.
- Check that motor brake 1 and motor brake 2 are connected correctly.
- Check that the MFDI terminals are opening and closing normally. (Use *U1-10 [Input Terminal Status]* to check.)

◆ Short Circuit Brake Sequence

When you use a PM motor, a short circuit between motor lines an external electromagnetic contactor with an MFDO signal can generate braking torque while the drive output is shut off. This braking operation is the “Short Circuit Braking”. If the drive short circuits the motor terminals while it is outputting voltage, it can cause damage to the drive.

To set the sequence to prevent a short circuit of motor terminals while the drive is outputting voltage, you can use the MFDO terminal set for *H2-xx = 78 [Short Circuit Brake Release]* to control the external relay and electromagnetic contactor for Short Circuit Braking. The operation of the short-circuit sequence depends on whether you use the MFDI terminals set for *H1-xx = 4B or 4C [Short Circuit MCFeedback (NO) or Short Circuit MCFeedback (NC)]* together:

- **When you use the MFDI signal set for *H1-xx = 4B or 4C***
  - When the drive operation starts
    The terminal set for *H2-xx = 78* activates when you remove the *STo [Safe Torque OFF]* or baseblock command. To prevent a short circuit, start the drive operation 20 ms after the MFDI signal set for *H1-xx = 4B or 4C* activates, and when *S1-10 [Up/Down Command Delay Time]* passes after the drive receives the Up/Down command.
  - When the drive operation stops
    The terminal set for *H2-xx = 78* deactivates when the drive is in *STo* or when the time set in *S1-10* passes after the drive receives the baseblock command.
- **When you do not use the MFDI signal set for *H1-xx = 4B or 4C***
  - When the drive operation starts
    The terminal set for *H2-xx = 78* activates when you remove the *STo* or Baseblock command. To prevent a short circuit, start the drive operation when the time set in *S1-10* passes after the drive receives the Up/Down command.
  - When the drive operation stops
    The terminal set for *H2-xx = 78* deactivates when the drive is in *STo* or when the time set in *S1-10* passes after the drive receives the baseblock command.

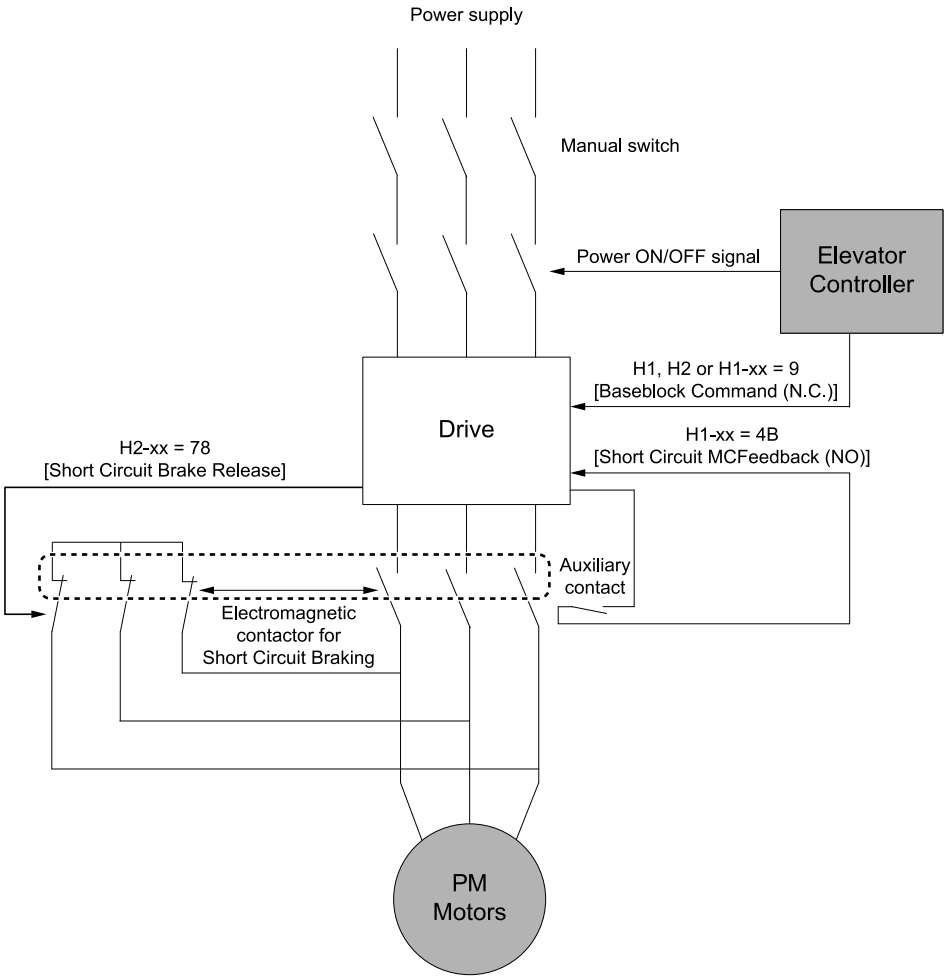

Figure 4.38 Wiring Example to Use Short Circuit Braking Function

Note:

When you set up a short circuit brake sequence, check these precautions:

- When you use short circuit braking, set *L8-88 = 1 [Safe Disable Operation Mode = Mode 1 (Alarm-Off, Ready-On)]*. When *L8-88 = 0 [Mode 0 (Alarm-On, Ready-Off)]*, the drive does not output the signal set for *H2-xx = 78*.
- Make sure that you set *H2-xx = 78, 178* to match the specifications of the electromagnetic contactor for short circuit braking before Auto-Tuning. An MFDO terminal set for *H2-xx = 78* activates, and an MFDO terminal set for *H2-xx = 178* deactivates during Auto-Tuning.
- Use a UPS or a power supply with a long time constant for the power supply of the electromagnetic contactor for short circuit braking. As shown in Figure 4.39, if a power loss occurs while the drive is running, or if the drive is de-energized by an Emergency Stop command, the power supply for contactor coil will be lost and the contactor will activate (closed). In this case, the drive output will be short-circuited, which can cause damage to the drive.

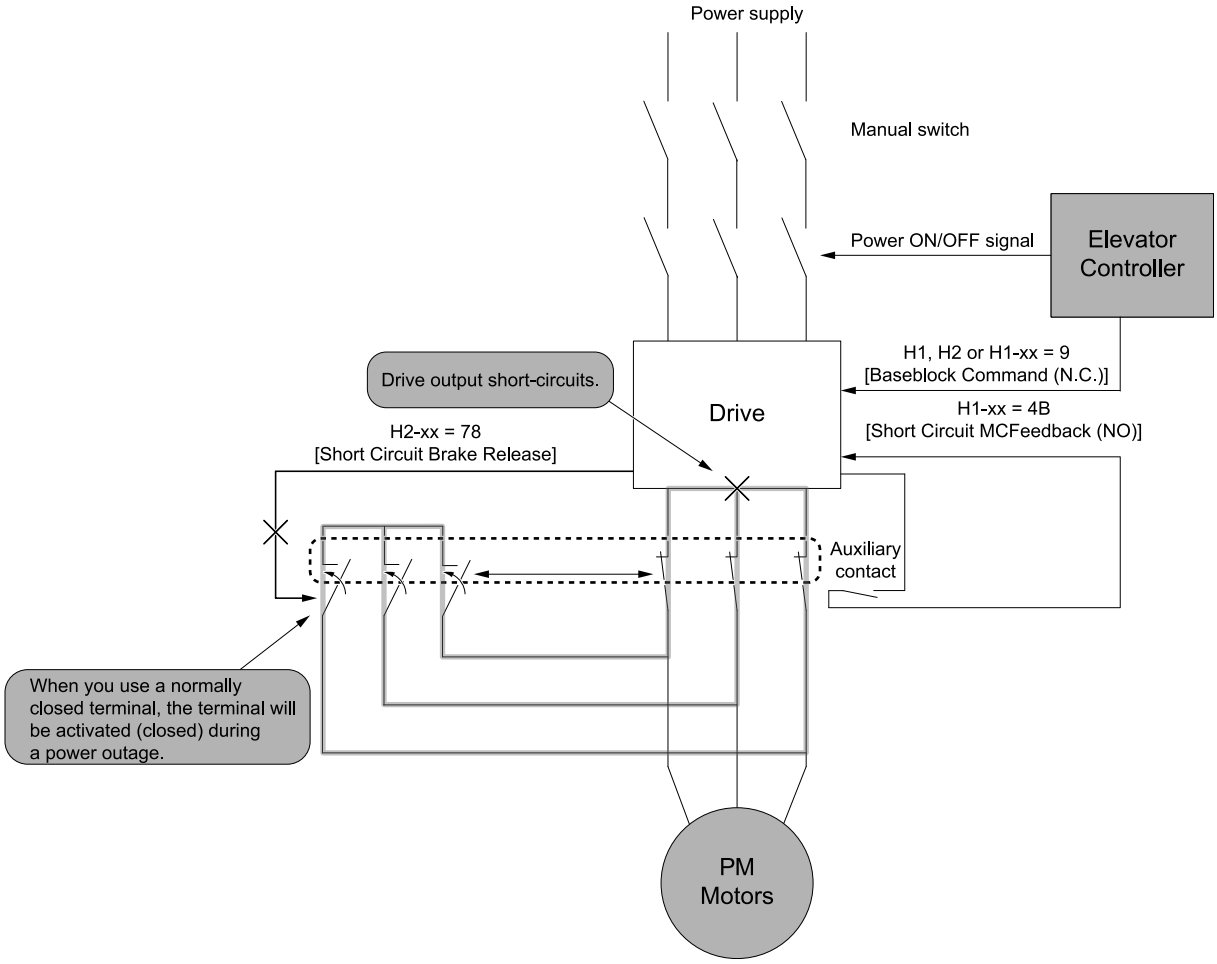

Figure 4.39 Failure Example when an Electromagnetic Contactor (N.C.) is Used for Short Circuit Braking

- When you use short circuit braking directly from the elevator controller, set up a sequence in which the electromagnetic contactor for short circuit braking operates after the drive output is shut off.

4.9 Improve Ride Comfort

The following table describes the most common problems related to ride comfort and proposes countermeasures to those problems. Before taking any action, make sure that you do the startup procedures as previously described.

Problem	Control Method and Possible Cause		Corrective Action
The elevator car rolls back at start.	V/f OLV	Insufficient torque when the brake is released.	• Increase *S1-02 [DC Injection Current at Start]*. • Increase *E1-10 [Minimum Output Voltage]* and *E1-08 [Mid Point A Voltage]*. Make sure that the starting and leveling current does not rise too high.
		DC Injection and brake timing is not optimized.	Set *S1-04 [DC Inj/Pos Lock Time at Start]* as short as possible, and make sure that brake releases completely before the motor starts to turn.
	OLV	The slip or torque compensation function acts too slowly.	• Decrease *C4-02 [Torque Compensation Delay Time]*. • Decrease *C3-02 [Slip Compensation Delay Time]*.
	CLV CLV/PM	The speed control responds too slowly when the brake is released.	Adjust the speed control loop parameters used during Position Lock. Increase *C5-19 [ASR P Gain during Position Lock]* and decrease *C5-20 [ASR I Time during Position Lock]*.
		The Position Lock control loop responds too slowly.	• Adjust the speed control loop parameters used during Position Lock. Increase *C5-19* and decrease *C5-20*. • Increase *S3-02 [Position Lock Gain 2 at Start]* gradually until rollback disappears.
	All	Motor torque is not fully established when the brake is released.	Increase *S1-06 [Brake Release Delay Time]* and *S1-04*.
		Motor contactor closes too late.	Make sure that the contactors are closed before the Up/Down command is issued.
There is a shock at start.	All	Motor starts turning when the brake is not completely released or runs against the brake.	Increase *S1-04*.
		The acceleration rate changes too quickly.	Decrease the Jerk at Start of Acceleration. Decrease *C2-01 [Jerk @ Start of Accel]* if set in m/s², increase *C2-01* if set in s.
		The elevator car rolls back during brake release.	Refer to “The elevator car rolls back at start”.
There is a shock at stop.	All	Brake is applied too early, causing the motor to run against the brake.	Increase *S1-07 [Brake Close Delay Time]*. If necessary, also increase *S1-05 [DC Inj/Pos Lock Time at Stop]*.
		Motor contactor is released before the brake is fully applied.	Check the motor contactor sequence.
	CLV CLV/PM	The elevator car rolls back before the brake applies at stop.	• Make sure that *C5-13 [ASR Proportional Gain 3]* and *C5-14 [ASR Integral Time 3]* are adjusted correctly. • Increase *S3-03 [Position Lock Gain at Stop]* gradually until rollback disappears. If there is vibration, decrease *S3-03*.
Jerk occurs due to overshoot when the motor reaches top speed.	OLV	Too fast torque or slip compensation.	• Increase *C4-02*. • Increase *C3-02*.
	CLV CLV/PM	Speed control loop setting is too soft or too hard.	• Adjust *C5-01 [ASR Proportional Gain 1]* and *C5-02 [ASR Integral Time 1]*. • Adjust *n5-xx [Feed Forward Control]* parameters if speed control loop settings cannot solve the problem.
		Incorrect motor data.	• For induction motors: Readjust the motor data in *E2-xx [Motor Parameters]*, especially *E2-02 [Motor Rated Slip]* and *E2-03 [Motor No-Load Current]*, or do Auto-Tuning again. • For PM motors: Readjust the motor data in *E5-xx [PM Motor Settings]* or do Auto-Tuning again.
		Feed Forward Control function is not set up correctly.	When *n5-01 = 1 [Feed Forward Control Selection = Enabled]*, make sure that the values set in *n5-02 [Motor Inertia Acceleration Ramp]* and *n5-03 [Feed Forward Control Gain]* are correct.
	All	The acceleration rate changes too quickly when reaching the selected speed.	Decrease the Jerk at the End of Acceleration. Decrease *C2-02 [Jerk @ End of Accel]* if set in m/s², increase *C2-02* if set in s.
Motor stops shortly (undershoot) when the leveling speed is reached.	V/f OLV	Insufficient torque at low speed.	Increase *E1-10* and *E1-08*. Make sure that the starting and leveling current does not rise too high.
	OLV CLV	Incorrect motor data.	Readjust the motor data in the *E2-xx* parameters, especially *E2-02* and *E2-03*, or do Auto-Tuning again.
		Too much slip compensation.	
	CLV CLV/PM	Speed control loop responds too slow.	Increase the Speed Control Gain and decrease the Speed Control Integral Time used for Low Speed at Stop. *1
		Feed Forward Control function is not set up correctly.	When *n5-01 = 1*, make sure that the values set in *n5-02* and *n5-03* are correct.
	All	The deceleration rate changes too quickly when reaching leveling speed.	Decrease the Jerk at the End of Deceleration. Decrease *C2-04 [Jerk @ End of Decel]* if set in m/s², increase *C2-04* if set in s.

Problem	Control Method and Possible Cause		Corrective Action
Motor speed overshoot at acceleration end and undershoot when reaching leveling speed occurs. You cannot adjust the speed control loop to resolve the problem.	CLV CLV/PM	Inertia is high.	Use the Feed Forward Control Function. Set *n5-01 = 1* and then adjust *n5-02* and *n5-03*. *2
Motor or machine vibrates at high speed or top speed.	OLV	Torque compensation responds too quickly.	Increase *C4-02 [Torque Compensation Delay Time]*.
	CLV CLV/PM	Speed control loop adjusted too hard.	Decrease *C5-01*, then increase *C5-02*.
Motor or machine vibrates in the low or medium speed range.	V/f OLV	Output voltage is too high.	Decrease *E1-10* and *E1-08*.
	OLV	Torque compensation responds too quickly.	Increase *C4-02*.
	OLV CLV	The value for the motor slip is set incorrectly.	Check the Motor Slip value in *E2-02*. Increase or decrease it in steps of 0.2 Hz.
	CLV CLV/PM	Speed control loop adjusted with too much gain.	• Decrease *C5-01* and then increase *C5-02* if the problem occurs at a speed higher than *C5-07 [ASR Gain Switchover Speed]*. • Decrease *C5-03 [ASR Proportional Gain 2]* and then increase *C5-04 [ASR Integral Time 2]* if the problem occurs at a speed lower than *C5-07*. • Decrease *C5-13* and then increase *C5-14* if the problem occurs at a speed lower than *C5-07* but only during deceleration.
Motor or machine vibrates in during Position Lock.	CLV CLV/PM	The Position Lock control loop responds too slowly.	• If vibration occurs during Position Lock at start, first decrease *S3-02*. • Decrease *S3-03* if vibration occurs during Position Lock at stop. • When you use the absolute encoder, if the problem continues after you adjust these parameters, adjust the value set in *F1-48 [Detect Speed Filter]* in 1-unit increments.
		The speed control responds too slowly when the brake is released.	Decrease *C5-19* and then increase *C5-20*.
Vibrations with the frequency equal to the motor speed occur.	CLV CLV/PM	Encoder vibrates.	Check the encoder mounting and the alignment of the encoder and motor shaft.
	All	There are mechanical problems.	Check bearings and gearbox.
		Rotational parts (motor armature, handwheel, brake disk/drum) are not properly balanced.	Properly balance rotating parts.
Oscillations occur when using an analog speed reference.	All	The analog reference value is not stable or the signal is noisy.	• Check the analog signal line connection. Use shielded, twisted-pair wires. • Apply a filter to the analog input signal by setting parameter *H3-13 [Analog Input FilterTime Constant]*.
Top speed is different in motoring and regenerative mode.	OLV	Slip compensation during regeneration is switched off.	Make sure that *C3-04 [Slip Compensation at Regen]* is set correctly and set *C3-05 = 0 [Output Voltage Limit Selection = Disabled]*.
Speed reference and motor speed do not match when using an analog reference signal.	All	The drive analog input is not set according to the signal level of the controller speed reference output signal.	Check the gain and bias settings for the analog input that is used to set the speed reference. • For terminal A1, check *H3-03 [Terminal A1 Gain Setting]* and *H3-04 [Terminal A1 Bias Setting]*. • For terminal A2, check *H3-11 [Terminal A2 Gain Setting]* and *H3-12 [Terminal A2 Bias Setting]*. • For terminal A3, check *H3-07 [Terminal A3 Gain Setting]* and *H3-08 [Terminal A3 Bias Setting]*.
Acceleration is longer than set to C1-xx parameters.	All	The load is too high.	• Make sure that the set acceleration rate is not too high (acceleration time is too short). • Make sure that the 50% ED output current of the drive is enough to fulfill the application requirements. • Make sure that the load is not seized, car guide lubrication is ok, etc.
	V/f OLV	The load is too high and the current/torque is higher than the stall prevention level.	Make sure that the value set in *L3-02 [Stall Prevent Level during Accel]* is not too low.
	OLV CLV CLV/PM	The load is too high and the torque is higher than the drive torque limits.	Make sure that the *L7-xx [Torque Limit]* parameter settings are not too low.
Motor speed does not match the speed reference at constant speed.	All	The load is too high.	Make sure that the 50% ED output current of the drive is enough to fulfill the application requirements.
	V/f	The load is too high and the current/torque is higher than the stall prevention level.	Make sure that the value set in *L3-06 [Stall Prevent Level during Run]* is not too low.
	OLV CLV CLV/PM	The load is too high and the torque is higher than the drive torque limits.	Make sure that the *L7-xx* parameter settings are not too low.
There is high-frequency acoustic noise from the motor.	All	The carrier frequency is too low.	Increase *C6-03 [Carrier Frequency]*. *3

*1 Refer to *Speed Loop Adjustments (CLV and CLV/PM) on page 182* for more information.
*2 Refer to *Feed Forward Control Adjustments (CLV and CLV/PM) on page 182* for more information.
*3 When you set *C6-03* higher than the default setting, you must consider the output current derating. Refer to *Carrier Frequency Settings and Rated Current Values on page 405* for more information.

4.10 Test Run Checklist

Examine the items in this checklist and check each item before a test run.

Checked	No.	Description
	1	Correctly install and wire the drive as specified by this manual.
	2	Energize the drive.
	3	Set the voltage for the power supply in *E1-01 [Input AC Supply Voltage]*.

Check the applicable items as specified by your control method.

Table 4.19 V/f Control [A1-02 = 0]

Checked	No.	Description
	4	Manually set the best V/f pattern for your application and motor characteristics.

Table 4.20 Open Loop Vector Control [A1-02 = 2] or Closed Loop Vector Control [A1-02 = 3]

Checked	No.	Description
	5	Decouple motor shafts and machines.
	6	Refer to the information on the motor nameplate and set this data correctly: • Motor rated power (kW) to *T1-02* • Motor rated voltage (V) to *T1-03* • Motor rated current (A) to *T1-04* • Motor base frequency (Hz) to *T1-05* • Number of motor poles to *T1-06* • Motor base speed (min^{-1}) to *T1-07*
	7	Do Auto-Tuning.

Table 4.21 Closed Loop Vector Control [A1-02 = 3]

Checked	No.	Description
	8	Set *F1-01 [Encoder 1 Pulse Count (PPR)] and F1-05 [Encoder 1 Rotation Selection]*.
	9	Set *C5-01 [ASR Proportional Gain 1] and C5-02 [ASR Integral Time 1]*.

Table 4.22 PM Closed Loop Vector Control [A1-02 = 7]

Checked	No.	Description
	10	Set *E5-02 to E5-24 [PM Motor Settings]*.
	11	Set *C5-01 [ASR Proportional Gain 1] and C5-02 [ASR Integral Time 1]*.
	12	Set *F1-01 [Encoder 1 Pulse Count (PPR)] and F1-05 [Encoder 1 Rotation Selection]*.
	13	Set *E5-11 [Encoder Z-Pulse Offset]*.

Checked	No.	Description
	14	The keypad will show “Rdy” after starting to operate the motor.
	15	To give the Up/Down command and speed reference from the keypad, push LO/RE to set to LOCAL Mode (when in LOCAL Mode, the LO/RE LED illuminates).
	16	If the motor rotates in the opposite direction during test run, switch two of the motor cables (U/T1, V/T2, W/T3).
	17	Set *E2-01 [Motor Rated Current (FLA)] and L1-01 [Motor Overload (oL1) Protection]* correctly for motor thermal protection.
	18	To give the Up/Down command and speed reference from the control circuit terminals, push LO/RE to set to REMOTE Mode (when in REMOTE Mode, the LO/RE LED turns OFF).
	19	When terminal A1 is used for the speed reference: • Voltage input – Set *H3-01 = 0, 1 [Terminal A1 Signal Level Select = 0 to 10V (Lower Limit at 0), -10 to +10V (Bipolar Reference)]*. – Set *H3-02 = 0 [Terminal A1 Function Selection = Speed Reference]*.

Checked	No.	Description
	21	When terminal A2 is used for the speed reference: • Voltage input – Set DIP Switch S1 on the drive to “V”. – Set *H3-09 = 0, 1 [Terminal A2 Signal Level Select = 0-10V (LowLim=0), -10 to +10 V (Bipolar Reference)]*. – Set *H3-10 = 0 [Terminal A2 Function Selection = Speed Reference]*. • Current input – Set DIP Switch S1 on the drive to “I”. – Set *H3-09 = 2, 3 [Terminal A2 Signal Level Select = 4 to 20 mA, 0 to 20 mA]*. – Set *H3-10 = 0 [Terminal A2 Function Selection = Speed Reference]*.
	22	When terminal A3 is used for the speed reference: • Voltage input – Set DIP Switch S4 on the drive to analog input side. – Set *H3-05 = 0, 1 [Terminal A3 Signal Level Select = 0 to 10V (Lower Limit at 0), -10 to +10V (Bipolar Reference)]*. – Set *H3-06 = 0 [Terminal A3 Function Selection = Speed Reference]*.
	23	Make sure that the speed reference reaches the necessary minimum and maximum values. **Note:** If drive operation is incorrect, make these adjustments: • Gain adjustment: Set the maximum voltage and current values, then adjust the analog input gain until the speed reference reaches the necessary value. (For terminal A1 input: *H3-03*, for terminal A2 input: *H3-11*, for terminal A3 input: *H3-07*) • Bias adjustment: Set the maximum voltage/current values, then adjust the analog input bias until the speed reference reaches the necessary minimum value. (For terminal A1 input: *H3-04*, for terminal A2 input: *H3-12*, for terminal A3 input: *H3-08*)

5

Standards Compliance

This chapter gives information about how to make the machines and devices that use this product comply with European standards and UL standards.

5.1 Section Safety 212
5.2 European Standards 214
5.3 UL Standards 233
5.4 China RoHS Compliance 252
5.5 对应中国RoHS指令 253
5.6 Safe Disable Input 254
5.7 No Motor Contactor Solution 261

5.1 Section Safety

⚠DANGER

Electrical Shock Hazard

Do not examine, connect, or disconnect wiring on an energized drive. Before servicing, disconnect all power to the equipment and wait for the time specified on the warning label at a minimum. The internal capacitor stays charged after the drive is de-energized. The charge indicator LED extinguishes when the DC bus voltage decreases below 50 Vdc. When all indicators are OFF, remove the covers before measuring for dangerous voltages to make sure that the drive is safe.

If you do work on the drive when it is energized, it will cause serious injury or death from electrical shock.

⚠WARNING

Electrical Shock Hazard

Do not operate the drive when covers are missing. Replace covers and shields before you operate the drive. Use the drive only as specified by the instructions.

Some figures in this section include drives without covers or safety shields to more clearly show the inside of the drive. If covers or safety shields are missing from the drive, it can cause serious injury or death.

Always ground the motor-side grounding terminal.

If you do not ground the equipment correctly, it can cause serious injury or death if you touch the motor case.

Do not remove covers or touch circuit boards while the drive is energized.

If you touch the internal components of an energized drive, it can cause serious injury or death.

Only let approved personnel install, wire, maintain, examine, replace parts, and repair the drive.

If personnel are not approved, it can cause serious injury or death.

Do not wear loose clothing or jewelry when you do work on the drive. Tighten loose clothing and remove all metal objects, for example watches or rings.

Loose clothing can catch on the drive and jewelry can conduct electricity and cause serious injury or death.

Do not modify the drive body or drive circuitry.

Modifications to drive body and circuitry can cause serious injury or death, will cause damage to the drive, and will void the warranty. Yaskawa is not responsible for modifications of the product made by the user.

Fire Hazard

Remove the insulation from the connection wire ends to the length shown in “Wire Stripping Length”.

If you pinch the insulation in the wire terminals, it can cause serious injury or death from fire.

Make sure that there are no loose stranded wires or frayed wires in the wire core after wiring is complete.

Loose stranded wires or frayed wires in the wire core can create a short circuit and cause serious injury or death from electrical shock or fire.

Tighten all terminal screws to the correct tightening torque.

Connections that are too loose or too tight can cause incorrect operation and damage to the drive. Incorrect connections can also cause death or serious injury from fire.

Tighten screws at an angle in the specified range shown in this manual.

If you tighten the screws at an angle not in the specified range, you can have loose connections that can cause damage to the terminal block or start a fire and cause serious injury or death.

⚠WARNING

Damage to Equipment

Do not apply incorrect voltage to the main circuit of the drive. Operate the drive in the specified range of the input voltage on the drive nameplate.

Voltages that are higher than the permitted nameplate tolerance can cause damage to the drive.

Fire Hazard

Do not put flammable or combustible materials on top of the drive and do not install the drive near flammable or combustible materials. Attach the drive to metal or other noncombustible material.

Flammable and combustible materials can start a fire and cause serious injury or death.

Crush Hazard

Wear eye protection when you do work on the drive.

If you do not use correct safety equipment, it can cause serious injury or death.

Electrical Shock Hazard

After the drive blows a fuse or trips an ELCB, do not immediately energize the drive or operate peripheral devices. Wait for the time specified on the warning label at a minimum and make sure that all indicators are OFF. Then check the wiring and peripheral device ratings to find the cause of the problem. If you do not know the cause of the problem, contact Yaskawa before you energize the drive or peripheral devices.

If you do not fix the problem before you operate the drive or peripheral devices, it can cause serious injury or death.

NOTICE

Damage to Equipment

When you touch the drive and circuit boards, make sure that you observe correct electrostatic discharge (ESD) procedures.

If you do not follow procedures, it can cause ESD damage to the drive circuitry.

Do not break the electrical connection between the drive and the motor when the drive is outputting voltage.

Incorrect equipment sequencing can cause damage to the drive.

Before you connect a dynamic braking option to the drive, make sure that qualified personnel read and obey the Braking Unit and Braking Resistor Unit Installation Manual (TOBPC72060001).

If you do not read and obey the manual or if personnel are not qualified, it can cause damage to the drive and braking circuit.

Make sure that all connections are correct after you install the drive and connect peripheral devices.

Incorrect connections can cause damage to the drive.

Note:

Do not use unshielded cable for control wiring. Use shielded, twisted-pair wires and ground the shield to the ground terminal of the drive. Unshielded wire can cause electrical interference and unsatisfactory system performance.

5.2 European Standards



Figure 5.1 CE Mark

The CE Mark identifies that the product meets environmental and safety standards in the European Union. Products manufactured, sold, or imported in the European Union must display the CE Mark.

European Union standards include standards for electrical appliances (Low Voltage Directive), standards for electrical noise (EMC Directive), and standards for machinery (Machinery Directive).

This product displays the CE Mark in accordance with the Low Voltage Directive, the EMC Directive, and the Machinery Directive.

Table 5.1 Harmonized Standards

European Directive	Harmonized Standards
Low Voltage Directive 2014/35/EU	EN 61800-5-1 *1
EMC Directive 2014/30/EU	EN 61800-3 *1
Machinery Directive 2006/42/EC	• EN ISO 13849-1:2015 (PL e (Cat.3)) • IEC 62061 (SILCL3) • IEC/EN IEC 62061 (Maximum SIL3) *1 • IEC/EN 61800-5-2 (SIL3) *1
Restriction of the use of certain hazardous substances (RoHS) 2011/65/EU	EN IEC 63000 *1

*1 Refer to “EU Declaration of Conformity” for the year of the Harmonized Standards.

The customer must display the CE Mark on the final device containing this product. Customers must verify that the final device complies with EU standards.

Table 5.2 Other Applicable Standards

European Directive	Applicable Standards
EU ErP Directive 2009/125/EC	The drive meets the requirements for IE2 efficiency according to the European regulation 2019/1781. The losses and the efficiency class were determined in accordance with IEC 61800-9-2.

◆ CE Low Voltage Directive Compliance

It has been confirmed that this product complies with the CE Low Voltage Directive by conducting a test according to IEC/EN 61800-5-1.

The following conditions must be satisfied for machines and devices incorporating this product to comply with the CE Low Voltage Directive.

■ Area of Use

Install this product in a location with Overvoltage Category III and pollution degree 2 or less as specified in IEC/CE 60664.

■ Guarding Against Debris

When you install IP20/UL Open type drives (models: 2xxxxB, 4xxxxB), use an enclosure panel that does not let unwanted material enter the drive from above or below.

■ Electrical Installation

Refer to for an example of a drive that is wired to comply with the CE Low Voltage Directive.

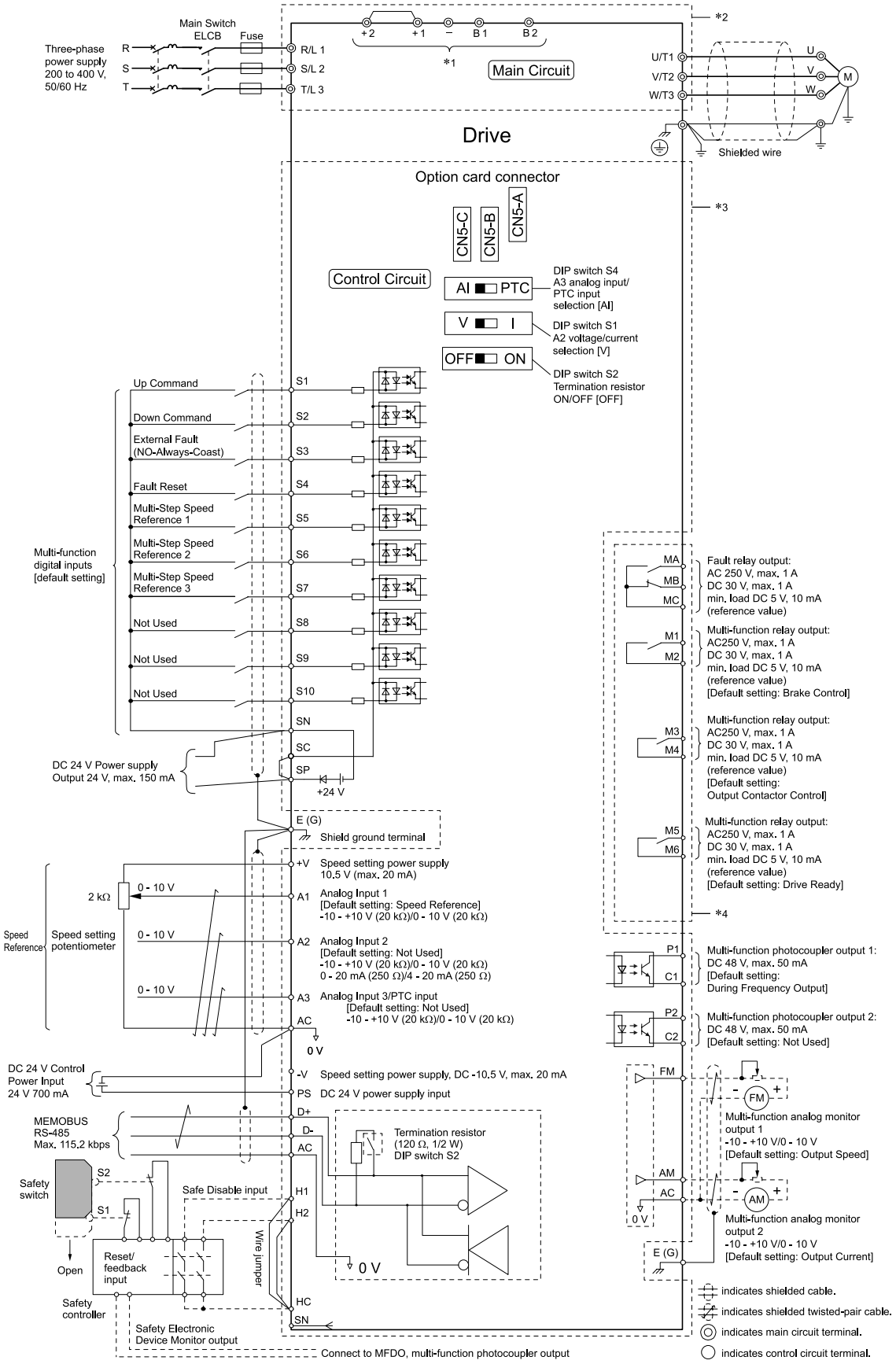

Figure 5.2 Wiring Diagram for CE Low Voltage Directive Compliance

*1 Connect peripheral options to terminals -, +1, +2, B1, and B2.

⚠ WARNING Sudden Movement Hazard

Make sure that the polarity is correct before you send an Up/Down command.
If the drive incorrectly detects the polarity, the drive can rotate in the direction opposite of the Up/Down command and cause serious injury or death.

*2 To protect the circuit, the main circuit is separated from the surface case that can touch the main circuit.
*3 The control circuit is a Safety Extra-Low Voltage circuit. Use reinforced insulation to separate this circuit from other circuits. Make sure that you connect the Safety Extra-Low Voltage as specified.
*4 Reinforced insulation separates the output terminals from other circuits. You can also connect circuits that are not Safety Extra-Low Voltage circuits when the drive output is 250 Vac 1 A maximum or 30 Vdc 1 A maximum.

■ Main Circuit Wire Gauges and Tightening Torques for CE Compliance

⚠ WARNING Electrical Shock Hazard

Only connect peripheral options, for example a DC reactor or braking resistor, to terminals +1, +2, +3, -, B1, and B2.
Incorrect wiring can cause serious injury or death.

Note:
- The recommended wire gauges are based on drive continuous current ratings with 75 °C (167 °F) 600 V class 2 heat-resistant indoor PVC wire. Assume these conditions:
  – Ambient temperature: 40 °C (104 °F) maximum
  – Wiring distance: 15 m (49 ft) maximum
  – Continuous rated output current
- Refer to the instruction manual for each device for recommended wire gauges to connect peripheral devices or options to terminals +1, +2, +3, -, B1, and B2. Contact Yaskawa or your nearest sales representative if the recommended wire gauges for the peripheral devices or options are out of the range of the applicable gauges for the drive.

Three-Phase 200 V Class

Model	Terminal	Recomm. Gauge mm²	Applicable Gauge (IP20 Applicable Gauge *1) mm²	Wire Stripping Length *2 mm	Terminal Screw Size and Shape	Tightening Torque N·m (lbf·in)
2022	R/L1, S/L2, T/L3	2.5	2.5 - 4 (2.5 - 4)	10	M4 ⊖	1.5 - 1.7 (13.5 - 15)
	U/T1, V/T2, W/T3	2.5	2.5 (2.5)	10	M4 ⊖	1.5 - 1.7 (13.5 - 15)
	-, +1, +2	2.5	2.5 - 6 (2.5 - 6)	18	M5 ⊖	2.3 - 2.5 (19.8 - 22)
	B1, B2	2.5	2.5 (2.5)	10	M4 ⊖	1.5 - 1.7 (13.5 - 15)
	⏚	6	4 - 6 (-)	-	M4 ⊕	1.2 - 1.5 (10.6 - 13.3)
2031	R/L1, S/L2, T/L3	4	2.5 - 6 (2.5 - 6)	10	M4 ⊖	1.5 - 1.7 (13.5 - 15)
	U/T1, V/T2, W/T3	2.5	2.5 - 6 (2.5 - 6)	10	M4 ⊖	1.5 - 1.7 (13.5 - 15)
	-, +1, +2	6	2.5 - 6 (2.5 - 6)	18	M5 ⊖	2.3 - 2.5 (19.8 - 22)
	B1, B2	2.5	2.5 - 6 (2.5 - 6)	10	M4 ⊖	1.5 - 1.7 (13.5 - 15)
	⏚	10	4 - 10 (-)	-	M5 ⊕	2.0 - 2.5 (17.7 - 22.1)
2041	R/L1, S/L2, T/L3	6	2.5 - 10 (2.5 - 10)	10	M4 ⊖	1.5 - 1.7 (13.5 - 15)
	U/T1, V/T2, W/T3	4	2.5 - 10 (2.5 - 10)	10	M4 ⊖	1.5 - 1.7 (13.5 - 15)
	-, +1, +2	10	4 - 16 (4 - 16)	18	M5 ⊖	2.3 - 2.5 (19.8 - 22)
	B1, B2	2.5	2.5 - 6 (2.5 - 6)	10	M4 ⊖	1.5 - 1.7 (13.5 - 15)
	⏚	10	6 - 10 (-)	-	M5 ⊕	2.0 - 2.5 (17.7 - 22.1)

Model	Terminal	Recomm. Gauge mm²	Applicable Gauge (IP20 Applicable Gauge *1) mm²	Wire Stripping Length *2 mm	Terminal Screw Size and Shape	Tightening Torque N·m (lbf·in)
2059	R/L1, S/L2, T/L3	10	4 - 16 (10 - 16)	18	M5	2.3 - 2.5 (19.8 - 22)
	U/T1, V/T2, W/T3	10	4 - 16 (6 - 16)	18	M5	2.3 - 2.5 (19.8 - 22)
	-, +1, +2	16	6 - 16 (10 - 16)	20	M6	5 - 5.5 (45 - 49)
	B1, B2	4	2.5 - 10 (2.5 - 10)	10	M4	1.5 - 1.7 (13.5 - 15)
	⏚	16	6 - 16 (-)	-	M6	5.4 - 6.0 (47.8 - 53.1)
2075	R/L1, S/L2, T/L3	25	10 - 25 (25)	20	M6	5 - 5.5 (45 - 49)
	U/T1, V/T2, W/T3	16	6 - 16 (16)	20	M6	5 - 5.5 (45 - 49)
	-, +1, +2	35	16 - 35 (35)	20	M6	5 - 5.5 (45 - 49)
	B1, B2	6	2.5 - 16 (2.5 - 16)	10	M4	1.5 - 1.7 (13.5 - 15)
	⏚	16	10 - 25 (-)	-	M6	5.4 - 6.0 (47.8 - 53.1)
2094	R/L1, S/L2, T/L3	25	10 - 25 (25)	20	M6	5 - 5.5 (45 - 49)
	U/T1, V/T2, W/T3	16	6 - 16 (16)	20	M6	5 - 5.5 (45 - 49)
	-, +1, +2	35	16 - 35 (35)	20	M6	5 - 5.5 (45 - 49)
	B1, B2	10	4 - 10 (4 - 10)	10	M4	1.5 - 1.7 (13.5 - 15)
	⏚	16	16 - 25 (-)	-	M6	5.4 - 6.0 (47.8 - 53.1)
2110	R/L1, S/L2, T/L3	25	16 - 35 (25 - 35)	27	M6	8 - 9 (71 - 80)
	U/T1, V/T2, W/T3	25	16 - 35 (25 - 35)	27	M6	8 - 9 (71 - 80)
	-, +1	25	25 - 50 (25 - 50)	27	M8	10 - 12 (89 - 107)
	B1, B2	10	4 - 35 (6 - 35)	21	M6	3 - 3.5 (27 - 31)
	⏚	16	16 - 25 (-)	-	M6	5.4 - 6.0 (47.8 - 53.1)
2144	R/L1, S/L2, T/L3	50	25 - 50 (50)	27	M6	8 - 9 (71 - 80)
	U/T1, V/T2, W/T3	50	25 - 50 (50)	27	M6	8 - 9 (71 - 80)
	-, +1	50	35 - 50 (50)	27	M8	10 - 12 (89 - 107)
	B1, B2	16	6 - 35 (6 - 35)	21	M6	3 - 3.5 (27 - 31)
	⏚	25	16 - 25 (-)	-	M6	5.4 - 6.0 (47.8 - 53.1)

Model	Terminal	Recomm. Gauge mm²	Applicable Gauge (IP20 Applicable Gauge *1) mm²	Wire Stripping Length *2 mm	Terminal Screw Size and Shape	Tightening Torque N·m (lbf·in)
2181	R/L1, S/L2, T/L3	95	50 - 95 (95)	37	M10 ⑧	12 - 14 (107 - 124)
	U/T1, V/T2, W/T3	95	50 - 95 (95)	37	M10 ⑧	12 - 14 (107 - 124)
	-, -, +1, +1 *3 *4	50	25 - 50 (50)	28	M6 ⑤	8 - 9 (71 - 80)
	+3 *4	50	25 - 50 (50)	28	M8 ⑥	8 - 9 (71 - 80)
	⏚	35	25 - 35 (-)	-	M8 ▭	9.0 - 11 (79.7 - 97.4)
2225	R/L1, S/L2, T/L3	95	50 - 95 (95)	37	M10 ⑧	12 - 14 (107 - 124)
	U/T1, V/T2, W/T3	95	50 - 95 (95)	37	M10 ⑧	12 - 14 (107 - 124)
	-, -, +1, +1 *3 *4	50	25 - 50 (50)	28	M6 ⑤	8 - 9 (71 - 80)
	+3 *4	50	25 - 50 (50)	28	M8 ⑥	8 - 9 (71 - 80)
	⏚	50	25 - 50 (-)	-	M8 ▭	9.0 - 11 (79.7 - 97.4)
2269	R/L1, S/L2, T/L3	70 × 2P	35 - 95 × 2P (70 - 95 × 2P)	-	M10 ⬡	20 (177)
	U/T1, V/T2, W/T3	70 × 2P	35 - 95 × 2P (70 - 95 × 2P)	-	M10 ⬡	20 (177)
	-, +1	120 × 2P	70 - 120 × 2P (120 × 2P)	-	M10 ⬡	20 (177)
	+3	70 × 2P	35 - 70 × 2P (70 × 2P)	-	M10 ⬡	20 (177)
	⏚	95	25 - 150 (-)	-	M10 ▭	18 - 23 (159 - 204)
2354	R/L1, S/L2, T/L3	70 × 2P	35 - 95 × 2P (70 - 95 × 2P)	-	M10 ⬡	20 (177)
	U/T1, V/T2, W/T3	70 × 2P	35 - 95 × 2P (70 - 95 × 2P)	-	M10 ⬡	20 (177)
	-, +1	120 × 2P	70 - 120 × 2P (120 × 2P)	-	M10 ⬡	20 (177)
	+3	70 × 2P	35 - 70 × 2P (70 × 2P)	-	M10 ⬡	20 (177)
	⏚	95	95 - 150 (-)	-	M10 ▭	18 - 23 (159 - 204)
2432	R/L1, S/L2, T/L3	150 × 2P	95 - 150 × 2P (150 × 2P)	-	M12 ⬡	35 (310)
	U/T1, V/T2, W/T3	150 × 2P	95 - 150 × 2P (150 × 2P)	-	M12 ⬡	35 (310)
	-, +1	185 × 2P	120 - 185 × 2P (185 × 2P)	-	M12 ⬡	35 (310)
	+3	150 × 2P	95 - 150 × 2P (150 × 2P)	-	M12 ⬡	35 (310)
	⏚	120	95 - 240 (-)	-	M12 ▭	32 - 40 (283 - 354)

Model	Terminal	Recomm. Gauge mm²	Applicable Gauge (IP20 Applicable Gauge *1) mm²	Wire Stripping Length *2 mm	Terminal Screw Size and Shape	Tightening Torque N·m (lbf·in)
2519	R/L1, S/L2, T/L3	150 × 2P	95 - 150 × 2P (150 × 2P)	-	M12	35 (310)
	U/T1, V/T2, W/T3	150 × 2P	95 - 150 × 2P (150 × 2P)	-	M12	35 (310)
	-, +1	185 × 2P	120 - 185 × 2P (185 × 2P)	-	M12	35 (310)
	+3	150 × 2P	95 - 150 × 2P (150 × 2P)	-	M12	35 (310)
	⏚	120	120 - 240 (-)	-	M12	32 - 40 (283 - 354)

*1 For IP20 protection, use wires that are in the range of applicable gauges.
*2 Remove insulation from the ends of wires to expose the length of wire shown.
*3 Terminals - and +1 have two screws. The Recommended Gauge is the wire gauge for one terminal.
*4 A junction terminal is necessary to connect a braking unit (CDBR-series) to terminals - and +3.

Three-Phase 400 V Class

Model	Terminal	Recomm. Gauge mm²	Applicable Gauge (IP20 Applicable Gauge *1) mm²	Wire Stripping Length *2 mm	Terminal Screw Size and Shape	Tightening Torque N·m (lbf·in)
4012	R/L1, S/L2, T/L3	2.5	2.5 (2.5)	10	M4	1.5 - 1.7 (13.5 - 15)
	U/T1, V/T2, W/T3	2.5	2.5 (2.5)	10	M4	1.5 - 1.7 (13.5 - 15)
	-, +1, +2	2.5	2.5 (2.5)	18	M5	2.3 - 2.5 (20.3 - 22.1)
	B1, B2	2.5	2.5 (2.5)	10	M4	1.5 - 1.7 (13.5 - 15)
	⏚	2.5	2.5 - 6 (-)	-	M4	1.2 - 1.5 (10.6 - 13.3)
4019	R/L1, S/L2, T/L3	2.5	2.5 (2.5)	10	M4	1.5 - 1.7 (13.5 - 15)
	U/T1, V/T2, W/T3	2.5	2.5 (2.5)	10	M4	1.5 - 1.7 (13.5 - 15)
	-, +1, +2	2.5	2.5 - 16 (2.5 - 16)	18	M5	2.3 - 2.5 (20.3 - 22.1)
	B1, B2	2.5	2.5 - 6 (2.5 - 6)	10	M4	1.5 - 1.7 (13.5 - 15)
	⏚	2.5	2.5 - 6 (-)	-	M5	2.0 - 2.5 (17.7 - 22.1)
4023	R/L1, S/L2, T/L3	2.5	2.5 - 4 (2.5 - 4)	10	M4	1.5 - 1.7 (13.5 - 15)
	U/T1, V/T2, W/T3	2.5	2.5 - 4 (2.5 - 4)	10	M4	1.5 - 1.7 (13.5 - 15)
	-, +1, +2	4	2.5 - 4 (2.5 - 4)	18	M5	2.3 - 2.5 (20.3 - 22.1)
	B1, B2	2.5	2.5 - 6 (2.5 - 6)	10	M4	1.5 - 1.7 (13.5 - 15)
	⏚	6	2.5 - 6 (-)	-	M5	2.0 - 2.5 (17.7 - 22.1)

Model	Terminal	Recomm. Gauge mm²	Applicable Gauge (IP20 Applicable Gauge *1) mm²	Wire Stripping Length *2 mm	Terminal Screw Size and Shape	Tightening Torque N·m (lbf·in)
4030	R/L1, S/L2, T/L3	10	4 - 10 (10)	18	M5 ⊖	2.3 - 2.5 (20.3 - 22.1)
	U/T1, V/T2, W/T3	6	2.5 - 6 (6)	18	M5 ⊖	2.3 - 2.5 (20.3 - 22.1)
	-, +1, +2	10	4 - 10 (10)	20	M6 ⑤	5 - 5.5 (45 - 49)
	B1, B2	2.5	2.5 - 10 (2.5 - 10)	10	M4 ⊖	1.5 - 1.7 (13.5 - 15)
	⏚	10	4 - 10 (-)	-	M6 ⊕	5.4 - 6.0 (44.3 - 48.7)
4039	R/L1, S/L2, T/L3	10	4 - 10 (10)	18	M5 ⊖	2.3 - 2.5 (20.3 - 22.1)
	U/T1, V/T2, W/T3	6	2.5 - 6 (6)	18	M5 ⊖	2.3 - 2.5 (20.3 - 22.1)
	-, +1, +2	10	4 - 10 (10)	20	M6 ⑤	5 - 5.5 (45 - 49)
	B1, B2	2.5	2.5 - 10 (2.5 - 10)	10	M4 ⊖	1.5 - 1.7 (13.5 - 15)
	⏚	10	6 - 16 (-)	-	M6 ⊕	5.4 - 6.0 (44.3 - 48.7)
4049	R/L1, S/L2, T/L3	10	4 - 16 (4 - 16)	18	M5 ⊖	2.3 - 2.5 (19.8 - 22)
	U/T1, V/T2, W/T3	6	2.5 - 16 (6 - 16)	18	M5 ⊖	2.3 - 2.5 (19.8 - 22)
	-, +1, +2	16	6 - 16 (6 - 16)	18	M5 ⊖	2.3 - 2.5 (19.8 - 22)
	B1, B2	4	2.5 - 10 (2.5 - 10)	10	M4 ⊖	1.5 - 1.7 (13.5 - 15)
	⏚	16	6 - 16 (-)	-	M6 ⊕	5.4 - 6.0 (47.8 - 53.1)
4056	R/L1, S/L2, T/L3	6	2.5 - 16 (4 - 16)	18	M5 ⊖	2.3 - 2.5 (19.8 - 22)
	U/T1, V/T2, W/T3	10	4 - 16 (6 - 16)	18	M5 ⊖	2.3 - 2.5 (19.8 - 22)
	-, +1, +2	10	4 - 35 (6 - 35)	18	M5 ⊖	2.3 - 2.5 (19.8 - 22) *3
	B1, B2	4	2.5 - 16 (2.5 - 16)	10	M4 ⊖	1.5 - 1.7 (13.5 - 15)
	⏚	16	10 - 16 (-)	-	M6 ⊕	5.4 - 6.0 (47.8 - 53.1)
4075	R/L1, S/L2, T/L3	10	4 - 16 (4 - 16)	18	M5 ⊖	2.3 - 2.5 (19.8 - 22)
	U/T1, V/T2, W/T3	10	4 - 25 (4 - 25)	18	M5 ⊖	2.3 - 2.5 (19.8 - 22)
	-, +1	16	6 - 35 (6 - 35)	18	M5 ⊖	2.3 - 2.5 (19.8 - 22) *3
	B1, B2	6	2.5 - 16 (2.5 - 16)	10	M4 ⊖	1.5 - 1.7 (13.5 - 15)
	⏚	16	10 - 25 (-)	-	M6 ⊕	5.4 - 6.0 (47.8 - 53.1)

Model	Terminal	Recomm. Gauge mm²	Applicable Gauge (IP20 Applicable Gauge *1) mm²	Wire Stripping Length *2 mm	Terminal Screw Size and Shape	Tightening Torque N·m (lbf·in)
4094	R/L1, S/L2, T/L3	16	6 - 25 (10 - 25)	18	M5	2.3 - 2.5 (19.8 - 22)
	U/T1, V/T2, W/T3	16	6 - 25 (10 - 25)	18	M5	2.3 - 2.5 (19.8 - 22)
	-, +1	25	10 - 25 (16 - 25)	20	M6	5 - 5.5 (45 - 49)
	B1, B2	10	4 - 35 (4 - 35)	18	M5	2.3 - 2.5 (19.8 - 22) *3
	⏚	16	16 - 25 (-)	-	M6	5.4 - 6.0 (47.8 - 53.1)
4114	R/L1, S/L2, T/L3	50	25 - 50 (50)	27	M6	8 - 9 (71 - 80)
	U/T1, V/T2, W/T3	50	25 - 50 (50)	27	M6	8 - 9 (71 - 80)
	-, +1	50	35 - 50 (50)	27	M8	10 - 12 (89 - 107)
	B1, B2	16	6 - 35 (6 - 35)	21	M6	3 - 3.5 (27 - 31)
	⏚	16	16 - 25 (-)	-	M6	5.4 - 6.0 (47.8 - 53.1)
4140	R/L1, S/L2, T/L3	95	50 - 95 (95)	37	M10	12 - 14 (107 - 124)
	U/T1, V/T2, W/T3	95	50 - 95 (95)	37	M10	12 - 14 (107 - 124)
	-, -, +1, +1 *4	50	25 - 50 (50)	28	M6	8 - 9 (71 - 80)
	B1, B2 *5	50	25 - 50 (50)	28	M8	8 - 9 (71 - 80)
	⏚	25	16 - 25 (-)	-	M8	9.0 - 11 (79.7 - 97.4)
4188	R/L1, S/L2, T/L3	95	50 - 95 (95)	37	M10	12 - 14 (107 - 124)
	U/T1, V/T2, W/T3	95	50 - 95 (95)	37	M10	12 - 14 (107 - 124)
	-, -, +1, +1 *4	50	25 - 50 (50)	28	M6	8 - 9 (71 - 80)
	B1, B2 *5	50	25 - 50 (50)	28	M8	8 - 9 (71 - 80)
	⏚	35	25 - 35 (-)	-	M8	9.0 - 11 (79.7 - 97.4)
4225	R/L1, S/L2, T/L3	70 × 2P	35 - 95 × 2P (70 - 95 × 2P)	-	M10	20 (177)
	U/T1, V/T2, W/T3	70 × 2P	35 - 95 × 2P (70 - 95 × 2P)	-	M10	20 (177)
	-, +1	120 × 2P	70 - 120 × 2P (120 × 2P)	-	M10	20 (177)
	+3	70 × 2P	35 - 70 × 2P (70 × 2P)	-	M10	20 (177)
	⏚	50	25 - 150 (-)	-	M10	18 - 23 (159 - 204)

Model	Terminal	Recomm. Gauge mm²	Applicable Gauge (IP20 Applicable Gauge *1) mm²	Wire Stripping Length *2 mm	Terminal Screw Size and Shape	Tightening Torque N·m (lbf·in)
4270	R/L1, S/L2, T/L3	70 × 2P	35 - 95 × 2P (70 - 95 × 2P)	-	M10	20 (177)
	U/T1, V/T2, W/T3	70 × 2P	35 - 95 × 2P (70 - 95 × 2P)	-	M10	20 (177)
	-, +1	120 × 2P	70 - 120 × 2P (120 × 2P)	-	M10	20 (177)
	+3	70 × 2P	35 - 70 × 2P (70 × 2P)	-	M10	20 (177)
	⏚	70	50 - 240 (-)	-	M10	18 - 23 (159 - 204)
4325	R/L1, S/L2, T/L3	70 × 2P	35 - 95 × 2P (70 - 95 × 2P)	-	M10	20 (177)
	U/T1, V/T2, W/T3	70 × 2P	35 - 95 × 2P (70 - 95 × 2P)	-	M10	20 (177)
	-, +1	120 × 2P	70 - 120 × 2P (120 × 2P)	-	M10	20 (177)
	+3	70 × 2P	35 - 70 × 2P (70 × 2P)	-	M10	20 (177)
	⏚	95	70 - 240 (-)	-	M10	18 - 23 (159 - 204)
4380	R/L1, S/L2, T/L3	150 × 2P	95 - 150 × 2P (150 × 2P)	-	M12	35 (310)
	U/T1, V/T2, W/T3	150 × 2P	95 - 150 × 2P (150 × 2P)	-	M12	35 (310)
	-, +1	185 × 2P	120 - 185 × 2P (185 × 2P)	-	M12	35 (310)
	+3	150 × 2P	95 - 150 × 2P (150 × 2P)	-	M12	35 (310)
	⏚	120	95 - 240 (-)	-	M12	32 - 40 (283 - 354)

*1 For IP20 protection, use wires that are in the range of applicable gauges.
*2 Remove insulation from the ends of wires to expose the length of wire shown.
*3 For wire gauges more than 30 mm², tighten to a tightening torque of 4.1 N·m to 4.5 N·m (36 lbf·in to 40 lbf·in).
*4 Terminals - and +1 have two screws. The Recommended Gauge is the wire gauge for one terminal.
*5 A junction terminal is necessary to connect a braking resistor unit (LKEB-series) to terminals B1 and B2.

■ Connect a Fuse to the Input Side (Primary Side)

The drive circuit protection must comply with IEC/EN 61800-5-1 for protection against a short circuit in the internal circuitry. Yaskawa recommends connecting semiconductor protection fuses on the input side for branch circuit protection.

⚠ WARNING Electrical Shock Hazard

After the drive blows a fuse or trips an ELCB, do not immediately energize the drive or operate peripheral devices. Wait for the time specified on the warning label at a minimum and make sure that all indicators are OFF. Then check the wiring and peripheral device ratings to find the cause of the problem. If you do not know the cause of the problem, contact Yaskawa before you energize the drive or peripheral devices.
If you do not fix the problem before you operate the drive or peripheral devices, it can cause serious injury or death.

Three-Phase 200 V Class

Table 5.3 Factory-Recommended Branch Circuit Protection (200 V Class)

Drive Model	Semiconductor Protection Fuse Model Manufacturer: EATON/Bussmann	Drive Model	Semiconductor Protection Fuse Model Manufacturer: EATON/Bussmann
2022	FWH-80B	2041	FWH-150B
2031	FWH-125B	2059	FWH-200B

Drive Model	Semiconductor Protection Fuse Model Manufacturer: EATON/Bussmann
2075	FWH-225A
2094	FWH-225A FWH-250A *1
2110	FWH-225A FWH-250A *1
2144	FWH-275A FWH-300A *1
2181	FWH-275A FWH-350A *1

Drive Model	Semiconductor Protection Fuse Model Manufacturer: EATON/Bussmann
2225	FWH-325A FWH-450A *1
2269	FWH-600A
2354	FWH-800A
2432	FWH-1000B
2519	FWH-1000B

*1 Yaskawa recommends a fuse with a large rated current for applications with repeated loads.

Three-Phase 400 V Class

Table 5.4 Factory-Recommended Branch Circuit Protection (400 V Class)

Drive Model	Semiconductor Protection Fuse Model Manufacturer: EATON/Bussmann
4012	FWH-60B
4019	FWH-80B
4023	FWH-90B
4030	FWH-150B
4039	FWH-200B
4049	FWH-200B
4056	FWH-225A
4075	FWH-250A
4094	FWH-275A

Drive Model	Semiconductor Protection Fuse Model Manufacturer: EATON/Bussmann
4114	FWH-275A
4140	FWH-300A
4188	FWH-325A FWH-400A *1
4225	FWH-500A
4270	FWH-600A
4325	FWH-700A
4380	FWH-800A

*1 Yaskawa recommends a fuse with a large rated current for applications with repeated loads.

■ CE Standards Compliance for DC Power Supply Input

To comply with CE Standards, install a fuse for the DC power supply input.

Figure 5.3 shows a wiring example for a DC power supply that has two drives connected in parallel.

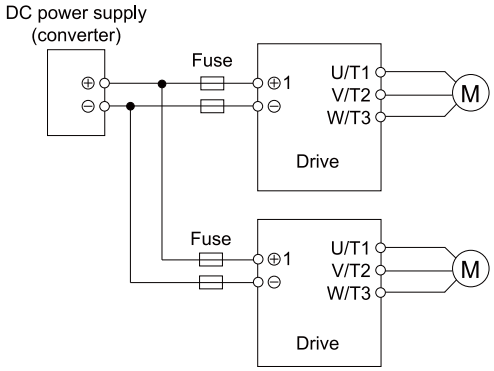

Figure 5.3 Wiring Example for DC Power Supply Input

⚠ WARNING Electrical Shock Hazard
Do not ground the main circuit bus.
Incorrect wiring can cause serious injury or death.

Note:
- Install a fuse for each drive when operating more than one drive. If one fuse blows, replace all fuses.
- Install the external filter (system) to comply with the EMC Directive.

Refer to Table 5.5 and Table 5.6 for the recommended fuses.

Table 5.5 Recommended Fuse (Three-Phase 200 V Class)

Drive Model	Fuse Manufacturer: Bussmann	
	Model	Qty
2022	FWH-80B	2
2031	FWH-125B	2
2041	FWH-150B	2
2059	FWH-200B	2
2075	FWH-250A	2
2094	FWH-250A FWH-300A *1	2
2110	FWH-250A FWH-275A *1	2
2144	FWH-300A FWH-350A *1	2

Drive Model	Fuse Manufacturer: Bussmann	
	Model	Qty
2181	FWH-350A FWH-450A *1	2
2225	FWH-450A FWH-600A *1	2
2269	FWH-600A FWH-700A *1	2
2354	FWH-800A FWH-1000B *1	2
2432	FWH-1000B	2
2519	FWH-1000B	2

*1 Yaskawa recommends a fuse with a large rated current for applications with repeated loads.

Table 5.6 Recommended Fuse (Three-Phase 400 V Class)

Drive Model	Fuse Manufacturer: Bussmann	
	Model	Qty
4012	FWH-60B	2
4019	FWH-80B	2
4023	FWH-90B	2
4030	FWH-150B	2
4039	FWH-200B	2
4049	FWH-200B	2
4056	FWH-225A	2
4075	FWH-250A	2
4094	FWH-275A	2
4114	FWH-275A	2

Drive Model	Fuse Manufacturer: Bussmann	
	Model	Qty
4140	FWH-300A FWH-325A *1	2
4188	FWH-400A FWH-450A *1	2
4225	FWH-500A FWH-600A *1	2
4270	FWH-600A FWH-700A *1	2
4325	FWH-700A FWH-800A *1	2
4380	FWH-800A FWH-1000B *1	2

*1 Yaskawa recommends a fuse with a large rated current for applications with repeated loads.

◆ EMC Directive

Drives with built-in EMC filters (models 4xxxC) were tested in accordance with European standard EN 61800-3, and comply with the EMC Directive.

Use drives with built-in EMC filters or install external EMC filters to the drive input side to comply with the EMC Directive. Refer to *Install the External EMC Noise Filter on page 229* for the installation of the EMC filter.

■ Install a Drive to Conform to the EMC Directive

Install drive models 4xxxC with this procedure to comply with the EMC Directive when the drive is a single unit or installed in a larger device.

1. Install the drive on a grounded metal plate.
2. Wire the drive and motor.

3. Ground the wire shielding on the drive side and motor side.

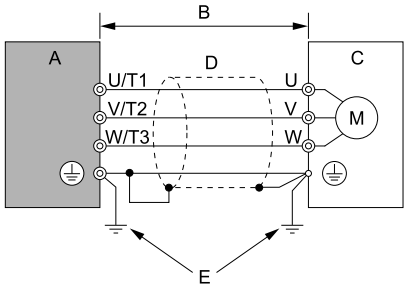

A - Drive
B - 10 m (32.8 ft) maximum
C - Motor
D - Metal conduit
E - Grounding wire

Figure 5.4 Wiring the Drive and Motor

Note:
- Use a braided shield cable for the drive and motor wiring or put the wires through a metal conduit.
- The maximum wiring length between the drive and motor is 10 m (32.8 ft). Keep the wire as short as possible.
- Keep the grounding wire as short as possible.
- Contact Yaskawa or your nearest sales representative to comply with European standards EN 12015 and EN 12016.

4. Use a cable clamp to ground the motor cable to the metal plate.

Note:
Make sure that the protective ground wire complies with technical specifications and local safety standards.

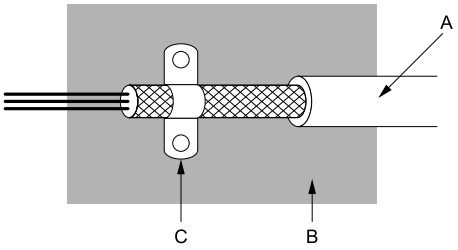

A - Braided shield cable
B - Metal plate
C - Cable clamp (conductive)

Figure 5.5 Ground the Shield

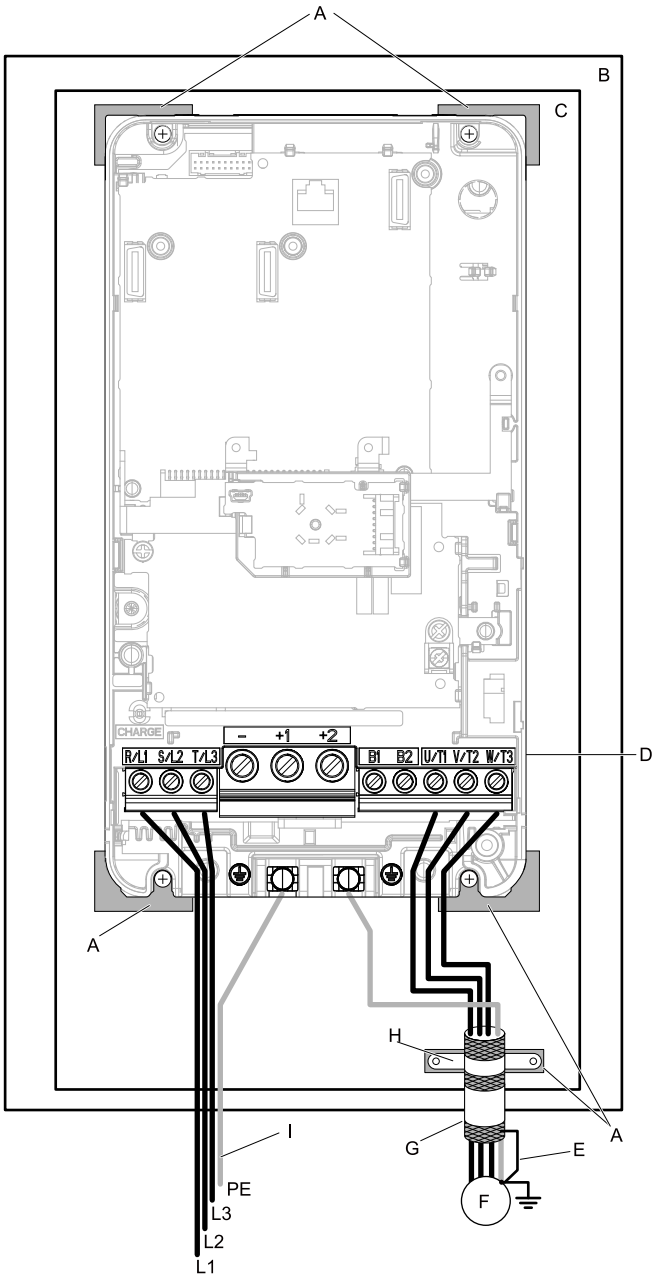

A - Grounding surface (Remove any paint or sealant.)
B - Enclosure panel
C - Metal plate
D - Drive
E - Shielded wire
F - Motor
G - Motor cable
H - Cable clamp
I - Grounding wire

Figure 5.6 Install a Drive with a Built-in EMC Filter

5. Connect an AC or DC reactor to decrease harmonic distortion.

Note:
Contact Yaskawa or your nearest sales representative for information about AC or DC reactor selection for EN 12015 compliance.

Ground Wiring

⚠ WARNING Electrical Shock Hazard
Do not remove covers or touch circuit boards while the drive is energized.
If you touch the internal components of an energized drive, it can cause serious injury or death.

⚠ WARNING Electrical Shock Hazard
Ground the neutral point on the power supply of drive models 4xxxC to comply with the EMC Directive before you turn on the EMC filter.
If you turn ON the EMC filter, but you do not ground the neutral point, it can cause serious injury or death.

Enable the Internal EMC Filter

On drive models 4xxxC, move the screw or screws to turn ON and OFF (enable and disable) the EMC filter.

Make sure that the symmetric grounding network is applied, and install the screw or screws in the ON position to enable the built-in EMC filter in compliance with the EMC Directive. The EMC filter switch screw or screws are installed in the OFF position by default.

⚠ WARNING Electrical Shock Hazard
Disconnect all power to the drive, wait for the time specified on the warning label, and check the drive for dangerous voltages before you remove covers or touch EMC filter screws.
If you touch the screws when there are dangerous voltages, it will cause serious injury or death.

⚠ WARNING Electrical Shock Hazard
Do not remove covers or touch circuit boards while the drive is energized.
If you touch the internal components of an energized drive, it can cause serious injury or death.

⚠ WARNING Electrical Shock Hazard
Ground the neutral point on the power supply of drive models 4xxxC to comply with the EMC Directive before you turn on the EMC filter.
If you turn ON the EMC filter, but you do not ground the neutral point, it can cause serious injury or death.

⚠ WARNING Electrical Shock Hazard
Connect the ground cable correctly.
If you touch electrical equipment that is not grounded, it can cause serious injury or death.

NOTICE
To disable the internal EMC filter, move the screws from ON to OFF and then tighten to the specified torque.
If you fully remove the screws or tighten the screws to an incorrect torque, it can cause drive failure.

NOTICE
Move the EMC switch screw or screws to the OFF position for networks that are not symmetrically grounded.
If the screws are not in the correct position, it can cause damage to the drive.

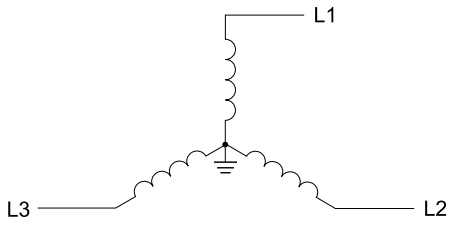

Figure 5.7 Symmetric Grounding

NOTICE Damage to Equipment
When you use the drive with a non-grounding, high-resistance grounding, or asymmetric-grounding network, put the EMC Filter screw or screws in the OFF position to disable the built-in EMC filter.
If you do not disable the built-in EMC filter, it will cause damage to the drive.

Table 5.7 shows asymmetric grounding networks.

Table 5.7 Asymmetric Grounding

Type of Grounding	Diagram
Grounded at the corner of the delta connection	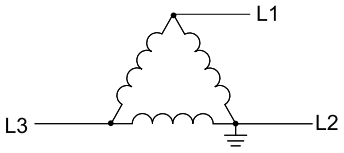
Grounded at the middle of the side	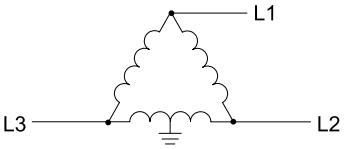
Single-phase, grounded at the end point	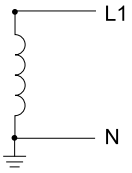
Three-phase variable transformer without solidly grounded neutral	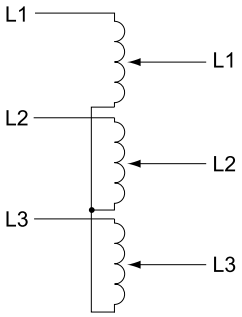

Table 5.8 EMC Filter Switch Location

Model	Switch Location Diagram
4012C - 4023C	Figure 5.8
4030C, 4039C	Figure 5.9
4049C, 4056C	Figure 5.10

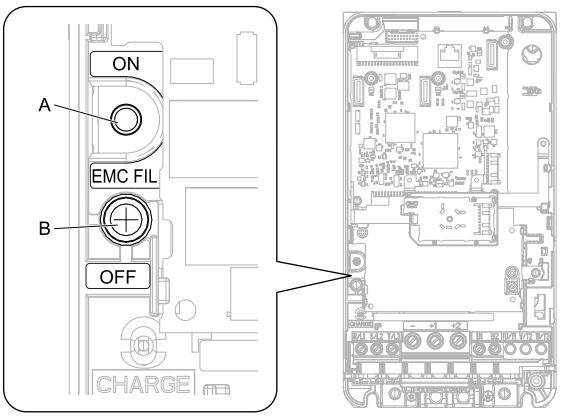

A - SW (ON) **B - Screw (OFF)**

Figure 5.8 EMC Filter Switch Location 1

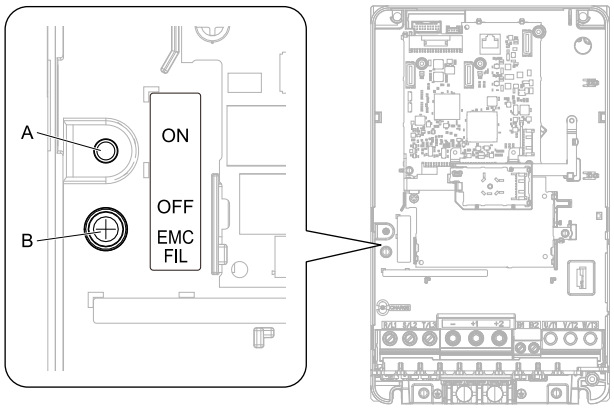

A - SW (ON) **B - Screw (OFF)**

Figure 5.9 EMC Filter Switch Location 2

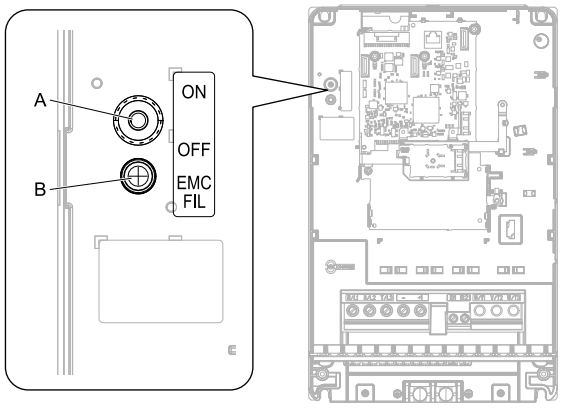

A - SW (ON) **B - Screw (OFF)**

Figure 5.10 EMC Filter Switch Location 3

If you lose an EMC filter switch screw, use Table 5.9 to find the correct replacement screw and install the new screw with the correct tightening torque.

NOTICE

Only use the screws specified in this manual.
If you use screws that are not approved, it can cause damage to the drive.

Table 5.9 Screw Sizes and Tightening Torques

Model	Screw Size	Tightening Torque N·m
4012 - 4056	M4 × 20	1.0 - 1.3

■ Install the External EMC Noise Filter

Drive models 2xxxA and 4xxxA must meet conditions in this section to comply with EN 61800-3.

Connect an EMC noise filter that complies with European standards as specified by Yaskawa to the input side (primary side). Refer to *External EMC Noise Filter Selection on page 232* to select the correct EMC noise filter.

Use this procedure to install an EMC noise filter to make equipment and devices added to the drive comply with the EMC Directive.

1. Install the drive and EMC noise filter on the same grounded metal plate.
2. Wire the drive and motor.

3. Ground the wire shielding on the drive side and motor side.

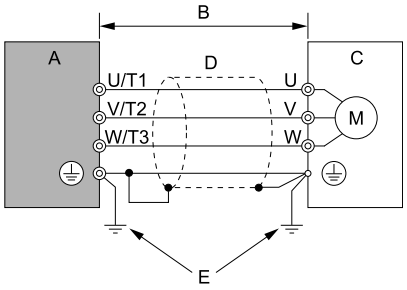

A - Drive
B - 10 m (32.8 ft) maximum
C - Motor
D - Metal conduit
E - Grounding wire

Figure 5.11 Wiring the Drive and Motor

Note:
- Use a braided shield cable for the drive and motor wiring or put the wires through a metal conduit.
- The maximum wiring length between the drive and motor is 10 m (32.8 ft). Keep the wire as short as possible.
- Keep the grounding wire as short as possible.
- Contact Yaskawa or your nearest sales representative to comply with European standards EN 12015 and EN 12016.

4. Use a cable clamp to ground the motor cable to the metal plate.

Note:
Make sure that the protective ground wire complies with technical specifications and local safety standards.

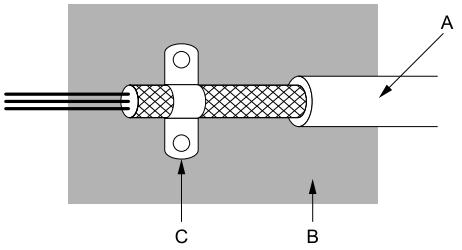

A - Braided shield cable
B - Metal plate
C - Cable clamp (conductive)

Figure 5.12 Ground the Shield

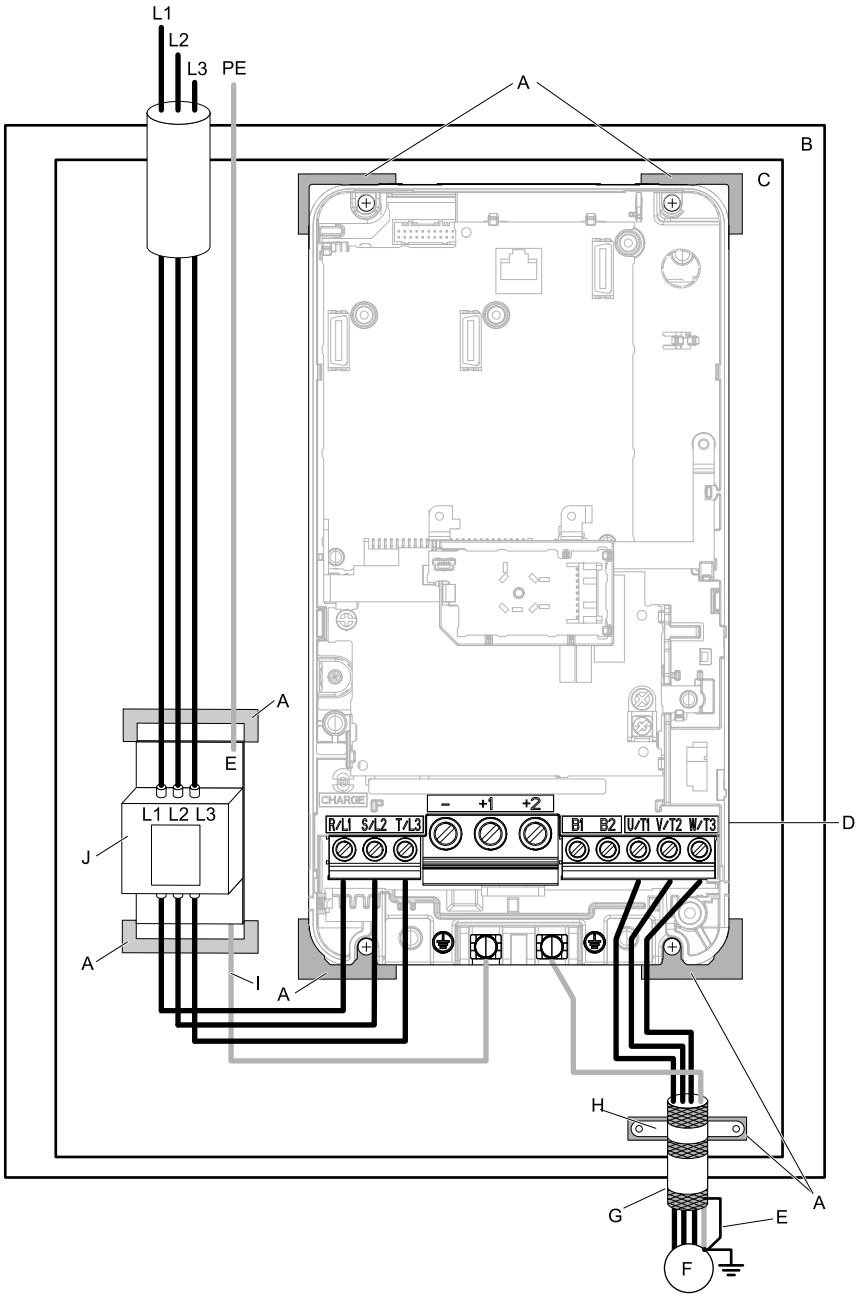

A - Grounding surface (Remove any paint or sealant.)
B - Enclosure panel
C - Metal plate
D - Drive
E - Ground the shield.
F - Motor
G - Motor cable (Braided shield cable: 10 m (32.8 ft) maximum)
H - Cable clamp
I - Grounding wire
J - EMC noise filter

Figure 5.13 EMC Noise Filter and Drive Installation Procedure

5. Connect an AC or DC reactor to decrease harmonic distortion.

Note:
Contact Yaskawa or your nearest sales representative for information about AC or DC reactor selection for EN 12015 compliance.

Ground Wiring

⚠ WARNING Electrical Shock Hazard
Do not remove covers or touch circuit boards while the drive is energized.
If you touch the internal components of an energized drive, it can cause serious injury or death.

⚠ WARNING Electrical Shock Hazard

Ground the neutral point on the power supply of drive models 4xxxC to comply with the EMC Directive before you turn on the EMC filter.
If you turn ON the EMC filter, but you do not ground the neutral point, it can cause serious injury or death.

External EMC Noise Filter Selection

Table 5.10 External EMC Noise Filter (2xxxA)

Model	EMC Noise Filter Model	Qty	Manufacturer
2022A	RTEN-5030	1	TDK
2031A	RTEN-5060	1	TDK
2041A	RTEN-5060	1	TDK
2059A	RTEN-5080	1	TDK
2075A	FS5972-100-35	1	Schaffner
2094A	FS5972-100-35	1	Schaffner
2110A	FS5972-170-40	1	Schaffner
2144A	FS5972-170-40	1	Schaffner
2181A	FS5972-170-40	1	Schaffner
2225A	FS5972-250-37	1	Schaffner
2269A	FS5972-410-99	1	Schaffner
2354A	FS5972-410-99	1	Schaffner
2432A	FS5972-410-99	1	Schaffner
2519A	FS5972-600-99	1	Schaffner

Table 5.11 External EMC Noise Filter (4xxxA)

Model	EMC Noise Filter Model	Qty	Manufacturer
4012A	B84143A0020R106	1	TDK
4019A	B84143A0035R106	1	TDK
4023A	B84143A0035R106	1	TDK
4030A	B84143A0050R106	1	TDK
4039A	B84143A0065R106	1	TDK
4049A	B84143A0065R106	1	TDK
4056A	B84143A0065R106	1	TDK
4075A	B84143A0080R106	1	TDK
4094A	FS5972-100-35	1	Schaffner
4114A	FS5972-170-40	1	Schaffner
4140A	FS5972-170-40	1	Schaffner
4188A	FS5972-170-40	1	Schaffner
4225A	FS5972-250-37	1	Schaffner
4270A	FS5972-250-37	1	Schaffner
4325A	FS5972-410-99	1	Schaffner
4380A	FS5972-410-99	1	Schaffner

5.3 UL Standards



Figure 5.14 UL/cUL Mark

The UL/cUL Mark identifies that this product conforms to rigid safety standards. This mark appears on products in the United States and Canada. It shows UL approval, which identifies that the product complies with safety standards after careful inspection and assessment. You must use UL Listed or UL Recognized parts for all primary components that are built into electrical equipment that has UL approval.

This product has been tested in accordance with UL standard UL 61800-5-1, and has been verified to be in compliance with UL standards.

Machines and devices integrated with this product must satisfy the following conditions for compliance with UL standards:

◆ Area of Use

Install this product in a location with Overvoltage Category III and pollution degree 2 or less as specified in UL 61800-5-1.

■ Ambient Temperature Setting

Maintain the ambient temperature within the following ranges according to the enclosure type.

- IP20/UL Open Type: -10 °C to +50 °C (14 °F to 122 °F)

◆ Wire the Main Circuit Terminal Block

Wire the main circuit terminal block correctly as specified by the instructions in the manual.

To comply with UL standards on drive models 2269 to 2519 and 4225 to 4380, use UL-approved closed-loop crimp terminals. Use the tools recommend by the terminal manufacturer to crimp the closed-loop crimp terminal. Refer to *Closed-Loop Crimp Terminals on page 242* for more information about UL Listed closed-loop crimp terminals.

To select the correct wire gauge, refer to *Main Circuit Wire Gauges and Tightening Torques for UL Compliance on page 235*.

■ Notes on Wiring the Main Circuit Terminal Block

Read these notes before you wire the main circuit terminal block.

- Use UL-Listed, vinyl-coated insulated copper wires for operation with a continuous maximum permitted temperature of 75 °C at 600 V.
- Remove all unwanted objects that are near the terminal block connections.
- Remove the insulation from the connection wires to the wire stripping lengths shown in the manual.
- Do not use bent or crushed wires. Remove the damaged end of the wire before you use it. Incorrect connections can cause death or serious injury from fire.
- Do not solder stranded wire. Soldered wire connections can become loose over time and cause unsatisfactory drive performance.
- If you use stranded wire, make sure that all of the wire strands are in the connection. Also, do not twist the stranded wire too much. Incorrect connections can cause death or serious injury from fire.
- Put the wire all the way into the terminal block. Remove the insulation from the wire to the recommended wire stripping length to fit the wire with insulation in the plastic housing.
- Use a torque driver, torque ratchet, or torque wrench for the screws. A slotted driver or a hex tool will be necessary to wire the screw clamp terminal. Use applicable tools as specified by the recommended conditions in the product manual.
- If you use power tools to tighten the terminal screws, use a low speed setting (300 r/min to 400 r/min). Failure to obey can cause damage to the terminal screws.
- Users can purchase wiring tools from Yaskawa. Contact Yaskawa or your nearest sales representative for more information.

- Wire gauges on existing drive models to be replaced can be different than the wire gauge ranges on new drives. Contact Yaskawa or your nearest sales representative for more information about the connection procedures.
- Do not tighten the terminal screws at an angle of 5 degrees or more. Failure to obey can cause damage to the terminal screws.
- If you damage a terminal screw, contact Yaskawa or your nearest sales representative.

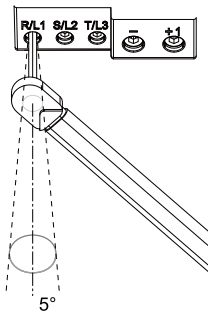

Figure 5.15 Permitted Angle

- Put the bit all the way into the hex socket to tighten the hex socket cap screw.
- When you tighten slotted screws, hold the straight-edge screwdriver perpendicularly to the screw. Make sure that you align the end of the straight-edge screwdriver with the screw groove.

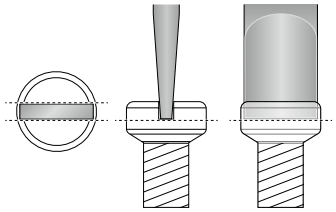

Figure 5.16 Tightening Slotted Screws

- After you connect the wires to the terminal block, lightly pull on the wires to make sure that they do not come out of the terminals.
- Remove the correct section of the wiring cover to make wiring easier.
- Do not let strain on the wiring cause damage. Use a strain relief near the wiring to release the tension. Refer to Figure 5.17 for an example.

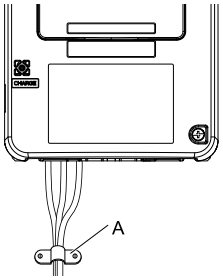

A - Cable clamp

Figure 5.17 Strain Relief Example

Table 5.12 Recommended Wiring Tools

Screw Size	Screw Shape	Adapter	Bit		Torque Driver Model (Tightening Torque)	Torque Wrench
			Model	Manufacturer		
M4	⊖	Bit	SF-BIT-SL 1,0X4,0-70	PHOENIX CONTACT	TSD-M 3NM (1.2 - 3 N·m (10.6 - 26.6 lbf·in))	N/A
M5 *1	⊖	Bit	SF-BIT-SL 1,2X6,5-70	PHOENIX CONTACT	Wire Gauge ≤ 25 mm ² (AWG 10): TSD-M 3NM (1.2 - 3 N·m (10.6 - 26.6 lbf·in))	Wire Gauge ≤ 25 mm ² (AWG 10): N/A
					Wire Gauge ≥ 30 mm ² (AWG 8): N/A	Wire Gauge ≥ 30 mm ² (AWG 8): 4.1 - 4.5 N·m (36.3 - 39.8 lbf·in) *2 *3

Screw Size	Screw Shape	Adapter	Bit		Torque Driver Model (Tightening Torque)	Torque Wrench
			Model	Manufacturer		
M6	⑤	Bit	SF-BIT-HEX 5-50	PHOENIX CONTACT	N/A	5 - 9 N·m (44.3 - 79.9 lbf·in) *2 *3
	⊖	Bit	SF-BIT-SL 1,2X6,5-70	PHOENIX CONTACT	N/A	3 - 3.5 N·m (26.6 - 31.0 lbf·in) *2 *3
M8	⑥	Bit	SF-BIT-HEX 6-50	PHOENIX CONTACT	N/A	8 - 12 N·m (70.8 - 106.2 lbf·in) *2 *3
M10	⑧	Bit	SF-BIT-HEX 8-50	PHOENIX CONTACT	N/A	12 - 14 N·m (106.2 - 123.9 lbf·in) *2 *3

*1 When wiring drive models 2059, 4094, and smaller, select the correct tools for the wire gauge.
*2 Use 6.35 mm (0.25 in) bit socket holder.
*3 Use a torque wrench that can apply this torque measurement range.

■ Main Circuit Wire Gauges and Tightening Torques for UL Compliance

Refer to *Three-Phase 200 V Class on page 236* and *Three-Phase 400 V Class on page 239* for the recommended wire gauges and tightening torques of the main circuit terminals.

Comply with local standards for correct wire gauges in the region where you will use the drive.

⚠ WARNING Electrical Shock Hazard

Only connect peripheral options, for example a DC reactor or braking resistor, to terminals +1, +2, +3, -, B1, and B2.
Incorrect wiring can cause serious injury or death.

Note:

- The recommended wire gauges are based on drive continuous current ratings with 75 °C (167 °F) 600 V class 2 heat-resistant indoor PVC wire. Assume these conditions:
  - Ambient temperature: 40 °C (104 °F) maximum
  - Wiring distance: 15 m (49 ft) maximum
  - Continuous rated output current
- Refer to the instruction manual for each device for recommended wire gauges to connect peripheral devices or options to terminals +1, +2, +3, -, B1, and B2. Contact Yaskawa or your nearest sales representative if the recommended wire gauges for the peripheral devices or options are out of the range of the applicable gauges for the drive.
- For drive models 2269 to 2519 and 4225 to 4380, use UL-approved closed-loop crimp terminals on the drive main circuit terminals. Use the tools recommend by the terminal manufacturer and make sure that the terminals are correctly connected.
- The metric wire gauge values are provided as reference information from equivalent AWG sizes and not exactly the same sizes as the AWG/kcmil values. Obey local safety regulations for wire sizes and make sure that the ferrule or crimp terminals are correct for your size.

Three-Phase 200 V Class

Model	Terminal	Recomm. Gauge AWG, kcmil	Applicable Gauge AWG, kcmil (mm²)	IP20 Applicable Gauge *1 AWG, kcmil (mm²)	Wire Stripping Length *2 mm	Terminal Screw Size and Shape	Tightening Torque N·m (lbf·in)
2022	R/L1, S/L2, T/L3	10	14 - 10 (2.5 - 6.0)	14 - 10 (2.5 - 6.0)	10	M4 ⊖	1.5 - 1.7 (13.5 - 15)
	U/T1, V/T2, W/T3	12	14 - 10 (2.5 - 6.0)	14 - 10 (2.5 - 6.0)	10	M4 ⊖	1.5 - 1.7 (13.5 - 15)
	-, +1, +2	10	14 - 10 (2.5 - 6.0)	14 - 10 (2.5 - 6.0)	18	M5 ⊖	2.3 - 2.5 (19.8 - 22) *3
	B1, B2	14	14 (2.5)	14 (2.5)	10	M4 ⊖	1.5 - 1.7 (13.5 - 15)
	⏚	10	12 - 10 (4.0 - 6.0)	-	-	M4 ⊕	1.2 - 1.5 (10.6 - 13.3)
2031	R/L1, S/L2, T/L3	8	12 - 8 (4.0 - 10)	12 - 8 (4.0 - 10)	10	M4 ⊖	1.5 - 1.7 (13.5 - 15)
	U/T1, V/T2, W/T3	10	14 - 8 (2.5 - 10)	14 - 8 (2.5 - 10)	10	M4 ⊖	1.5 - 1.7 (13.5 - 15)
	-, +1, +2	8	12 - 8 (4.0 - 10)	12 - 8 (4.0 - 10)	18	M5 ⊖	2.3 - 2.5 (19.8 - 22) *3
	B1, B2	14	14 (2.5)	14 (2.5)	10	M4 ⊖	1.5 - 1.7 (13.5 - 15)
	⏚	8	12 - 8 (4.0 - 10)	-	-	M5 ⊕	2.0 - 2.5 (17.7 - 22.1)
2041	R/L1, S/L2, T/L3	8	12 - 6 (4.0 - 16)	12 - 6 (4.0 - 16)	10	M4 ⊖	1.5 - 1.7 (13.5 - 15)
	U/T1, V/T2, W/T3	8	12 - 8 (4.0 - 10)	12 - 8 (4.0 - 10)	10	M4 ⊖	1.5 - 1.7 (13.5 - 15)
	-, +1, +2	6	10 - 6 (6.0 - 16)	10 - 6 (6.0 - 16)	18	M5 ⊖	2.3 - 2.5 (19.8 - 22) *3
	B1, B2	12	14 - 12 (2.5 - 4.0)	14 - 12 (2.5 - 4.0)	10	M4 ⊖	1.5 - 1.7 (13.5 - 15)
	⏚	8	10 - 8 (6.0 - 10)	-	-	M5 ⊕	2.0 - 2.5 (17.7 - 22.1)
2059	R/L1, S/L2, T/L3	6	10 - 4 (6.0 - 25)	10 - 4 (6.0 - 25)	18	M5 ⊖	2.3 - 2.5 (19.8 - 22) *3
	U/T1, V/T2, W/T3	6	10 - 4 (6.0 - 25)	10 - 4 (6.0 - 25)	18	M5 ⊖	2.3 - 2.5 (19.8 - 22) *3
	-, +1, +2	4	8 - 4 (10 - 25)	8 - 4 (10 - 25)	20	M6 ⑤	5 - 5.5 (45 - 49)
	B1, B2	10	14 - 10 (2.5 - 6.0)	14 - 10 (2.5 - 6.0)	10	M4 ⊖	1.5 - 1.7 (13.5 - 15)
	⏚	6	10 - 6 (6.0 - 16)	-	-	M6 ⊕	5.4 - 6.0 (47.8 - 53.1)
2075	R/L1, S/L2, T/L3	3	6 - 3 (16 - 25)	6 - 3 (16 - 25)	20	M6 ⑤	5 - 5.5 (45 - 49)
	U/T1, V/T2, W/T3	4	8 - 3 (10 - 25)	6 - 3 (16 - 25)	20	M6 ⑤	5 - 5.5 (45 - 49)
	-, +1, +2	2	4 - 2 (25 - 35)	4 - 2 (25 - 35)	20	M6 ⑤	5 - 5.5 (45 - 49)
	B1, B2	8	12 - 8 (4.0 - 10)	12 - 8 (4.0 - 10)	10	M4 ⊖	1.5 - 1.7 (13.5 - 15)
	⏚	6	8 - 4 (10 - 25)	-	-	M6 ⊕	5.4 - 6.0 (47.8 - 53.1)

Model	Terminal	Recomm. Gauge AWG, kcmil	Applicable Gauge AWG, kcmil (mm²)	IP20 Applicable Gauge *1 AWG, kcmil (mm²)	Wire Stripping Length *2 mm	Terminal Screw Size and Shape	Tightening Torque N·m (lbf·in)
2094	R/L1, S/L2, T/L3	2	4 - 2 (25 - 35)	4 - 2 (25 - 35)	20	M6 ⑤	5 - 5.5 (45 - 49)
	U/T1, V/T2, W/T3	4	8 - 2 (10 - 35)	6 - 2 (16 - 35)	20	M6 ⑤	5 - 5.5 (45 - 49)
	-, +1, +2	1	3 - 1 (25 - 50)	3 - 1 (25 - 50)	20	M6 ⑤	5 - 5.5 (45 - 49)
	B1, B2	8	12 - 6 (4.0 - 16)	12 - 6 (4.0 - 16)	10	M4	1.5 - 1.7 (13.5 - 15)
	⏚	6	6 - 4 (16 - 25)	-	-	M6	5.4 - 6.0 (47.8 - 53.1)
2110	R/L1, S/L2, T/L3	3	6 - 1/0 (16 - 50)	6 - 1/0 (16 - 50)	27	M6 ⑤	8 - 9 (71 - 80)
	U/T1, V/T2, W/T3	3	6 - 1/0 (16 - 50)	6 - 1/0 (16 - 50)	27	M6 ⑤	8 - 9 (71 - 80)
	-, +1	2	2 (35)	2 (35)	27	M8 ⑥	10 - 12 (89 - 107)
	B1, B2	8	12 - 2 (4.0 - 35)	12 - 2 (4.0 - 35)	21	M6	3 - 3.5 (27 - 31)
	⏚	6	6 - 4 (16 - 25)	-	-	M6	5.4 - 6.0 (47.8 - 53.1)
2144	R/L1, S/L2, T/L3	1	3 - 2/0 (25 - 70)	3 - 2/0 (25 - 70)	27	M6 ⑤	8 - 9 (71 - 80)
	U/T1, V/T2, W/T3	1	3 - 2/0 (25 - 70)	3 - 2/0 (25 - 70)	27	M6 ⑤	8 - 9 (71 - 80)
	-, +1	1/0	2 - 1/0 (35 - 50)	2 - 1/0 (35 - 50)	27	M8 ⑥	10 - 12 (89 - 107)
	B1, B2	4	8 - 4 (10 - 25)	8 - 4 (10 - 25)	21	M6	3 - 3.5 (27 - 31)
	⏚	4	6 - 4 (16 - 25)	-	-	M6	5.4 - 6.0 (47.8 - 53.1)
2181	R/L1, S/L2, T/L3	1/0	2 - 4/0 (35 - 95)	2 - 4/0 (35 - 95)	37	M10 ⑧	12 - 14 (107 - 124)
	U/T1, V/T2, W/T3	2/0	1 - 4/0 (50 - 95)	1 - 4/0 (50 - 95)	37	M10 ⑧	12 - 14 (107 - 124)
	-, -, +1, +1 *4 *5	3	6 - 2/0 (16 - 70)	6 - 2/0 (16 - 70)	28	M6 ⑤	8 - 9 (71 - 80)
	+3 *5	3	4 - 3/0 (25 - 95)	4 - 3/0 (25 - 95)	28	M8 ⑥	8 - 9 (71 - 80)
	⏚	4	4 - 2 (25 - 35)	-	-	M8	9.0 - 11 (79.7 - 97.4)
2225	R/L1, S/L2, T/L3	3/0	1/0 - 4/0 (50 - 95)	2/0 - 4/0 (70 - 95)	37	M10 ⑧	12 - 14 (107 - 124)
	U/T1, V/T2, W/T3	3/0	1/0 - 4/0 (50 - 95)	3/0 - 4/0 (95)	37	M10 ⑧	12 - 14 (107 - 124)
	-, -, +1, +1 *4 *5	1/0	2 - 2/0 (35 - 70)	1/0 - 2/0 (50 - 70)	28	M6 ⑤	8 - 9 (71 - 80)
	+3 *5	1	3 - 3/0 (25 - 95)	1 - 3/0 (35 - 95)	28	M8 ⑥	8 - 9 (71 - 80)
	⏚	4	4 - 1/0 (25 - 50)	-	-	M8	9.0 - 11 (79.7 - 97.4)

Model	Terminal	Recomm. Gauge AWG, kcmil	Applicable Gauge AWG, kcmil (mm²)	IP20 Applicable Gauge *1 AWG, kcmil (mm²)	Wire Stripping Length *2 mm	Terminal Screw Size and Shape	Tightening Torque N·m (lbf·in)
2269	R/L1, S/L2, T/L3	2/0 × 2P	1 - 3/0 × 2P (50 - 95 × 2P)	2/0 - 3/0 × 2P (70 - 95 × 2P)	-	M10	20 (177)
	U/T1, V/T2, W/T3	2/0 × 2P	1 - 3/0 × 2P (50 - 95 × 2P)	2/0 - 3/0 × 2P (70 - 95 × 2P)	-	M10	20 (177)
	-, +1	4/0 × 2P	2/0 - 4/0 × 2P (70 - 95 × 2P)	4/0 × 2P (95 × 2P)	-	M10	20 (177)
	+3	1/0 × 2P	2 - 1/0 × 2P (35 - 50 × 2P)	1/0 × 2P (50 × 2P)	-	M10	20 (177)
	⏚	3	4 - 300 (25 - 150)	-	-	M10	18 - 23 (159 - 204)
2354	R/L1, S/L2, T/L3	2/0 × 2P	1 - 4/0 × 2P (50 - 95 × 2P)	2/0 - 4/0 × 2P (70 - 95 × 2P)	-	M10	20 (177)
	U/T1, V/T2, W/T3	2/0 × 2P	1 - 3/0 × 2P (50 - 95 × 2P)	2/0 - 3/0 × 2P (70 - 95 × 2P)	-	M10	20 (177)
	-, +1	4/0 × 2P	2/0 - 4/0 × 2P (70 - 95 × 2P)	4/0 × 2P (95 × 2P)	-	M10	20 (177)
	+3	1/0 × 2P	2 - 1/0 × 2P (35 - 50 × 2P)	1/0 × 2P (50 × 2P)	-	M10	20 (177)
	⏚	2	3 - 300 (25 - 150)	-	-	M10	18 - 23 (159 - 204)
2432	R/L1, S/L2, T/L3	250 × 2P	3/0 - 250 × 2P (95 - 120 × 2P)	250 × 2P (120 × 2P)	-	M12	35 (310)
	U/T1, V/T2, W/T3	250 × 2P	3/0 - 250 × 2P (95 - 120 × 2P)	250 × 2P (120 × 2P)	-	M12	35 (310)
	-, +1	300 × 2P	4/0 - 300 × 2P (95 - 150 × 2P)	300 × 2P (150 × 2P)	-	M12	35 (310)
	+3	300 × 2P	4/0 - 300 × 2P (95 - 150 × 2P)	300 (150)	-	M12	35 (310)
	⏚	1	2 - 350 (35 - 185)	-	-	M12	32 - 40 (283 - 354)
2519	R/L1, S/L2, T/L3	250 × 2P	3/0 - 300 × 2P (95 - 150 × 2P)	250 - 300 × 2P (120 - 150 × 2P)	-	M12	35 (310)
	U/T1, V/T2, W/T3	250 × 2P	3/0 - 300 × 2P (95 - 150 × 2P)	250 - 300 × 2P (120 - 150 × 2P)	-	M12	35 (310)
	-, +1	300 × 2P	4/0 - 300 × 2P (95 - 150 × 2P)	300 × 2P (150 × 2P)	-	M12	35 (310)
	+3	300 × 2P	4/0 - 300 × 2P (95 - 150 × 2P)	300 (150)	-	M12	35 (310)
	⏚	1	1 - 350 (50 - 185)	-	-	M12	32 - 40 (283 - 354)

*1 For IP20 protection, use wires that are in the range of applicable gauges.
*2 Remove insulation from the ends of wires to expose the length of wire shown.
*3 When you use AWG 8 or larger wires to comply with UL standards, tighten the screws to a tightening torque of 4.1 N·m to 4.5 N·m (36 lbf·in to 40 lbf·in).
*4 Terminals - and +1 have two screws. The Recommended Gauge is the wire gauge for one terminal.
*5 A junction terminal is necessary to connect a braking unit (CDBR-series) to terminals - and +3.

Three-Phase 400 V Class

Model	Terminal	Recomm. Gauge AWG, kcmil	Applicable Gauge AWG, kcmil (mm²)	IP20 Applicable Gauge *1 AWG, kcmil (mm²)	Wire Stripping Length *2 mm	Terminal Screw Size and Shape	Tightening Torque N·m (lbf·in)
4012	R/L1, S/L2, T/L3	14	14 - 12 (2.5 - 4.0)	14 - 12 (2.5 - 4.0)	10	M4 ⊖	1.5 - 1.7 (13.3 - 15)
	U/T1, V/T2, W/T3	14	14 (2.5)	14 (2.5)	10	M4 ⊖	1.5 - 1.7 (13.3 - 15)
	-, +1, +2	12	14 - 12 (2.5 - 4.0)	14 - 12 (2.5 - 4.0)	18	M5 ⊖	2.3 - 2.5 (20.3 - 22.1) *3
	B1, B2	14	14 (2.5)	14 (2.5)	10	M4 ⊖	1.5 - 1.7 (13.3 - 15)
	⏚	10	14 - 10 (2.5 - 6.0)	-	-	M4 ⊕	1.2 - 1.5 (10.6 - 13.3)
4019	R/L1, S/L2, T/L3	12	14 - 10 (2.5 - 6.0)	14 - 10 (2.5 - 6.0)	10	M4 ⊖	1.5 - 1.7 (13.3 - 15)
	U/T1, V/T2, W/T3	12	14 - 10 (2.5 - 6.0)	14 - 10 (2.5 - 6.0)	10	M4 ⊖	1.5 - 1.7 (13.3 - 15)
	-, +1, +2	10	14 - 10 (2.5 - 6.0)	14 - 10 (2.5 - 6.0)	18	M5 ⊖	2.3 - 2.5 (20.3 - 22.1) *3
	B1, B2	14	14 - 10 (2.5 - 6.0)	14 - 10 (2.5 - 6.0)	10	M4 ⊖	1.5 - 1.7 (13.3 - 15)
	⏚	10	14 - 10 (2.5 - 6.0)	-	-	M5 ⊕	2.0 - 2.5 (17.7 - 22.1)
4023	R/L1, S/L2, T/L3	10	14 - 10 (2.5 - 6.0)	14 - 10 (2.5 - 6.0)	10	M4 ⊖	1.5 - 1.7 (13.3 - 15)
	U/T1, V/T2, W/T3	12	14 - 10 (2.5 - 6.0)	14 - 10 (2.5 - 6.0)	10	M4 ⊖	1.5 - 1.7 (13.3 - 15)
	-, +1, +2	10	14 - 10 (2.5 - 6.0)	14 - 10 (2.5 - 6.0)	18	M5 ⊖	2.3 - 2.5 (20.3 - 22.1) *3
	B1, B2	14	14 - 10 (2.5 - 6.0)	14 - 10 (2.5 - 6.0)	10	M4 ⊖	1.5 - 1.7 (13.3 - 15)
	⏚	10	14 - 10 (2.5 - 6.0)	-	-	M5 ⊕	2.0 - 2.5 (17.7 - 22.1)
4030	R/L1, S/L2, T/L3	8	12 - 8 (4.0 - 10)	8 (10)	18	M5 ⊖	2.3 - 2.5 (20.3 - 22.1) *3
	U/T1, V/T2, W/T3	10	14 - 8 (2.5 - 10)	10 - 8 (6.0 - 10)	18	M5 ⊖	2.3 - 2.5 (20.3 - 22.1) *3
	-, +1, +2	8	12 - 8 (4.0 - 10)	8 (10)	20	M6 ⑤	5 - 5.5 (45 - 49)
	B1, B2	14	14 - 8 (2.5 - 10)	14 - 8 (2.5 - 10)	10	M4 ⊖	1.5 - 1.7 (13.3 - 15)
	⏚	8	12 - 8 (4.0 - 10)	-	-	M6 ⊕	5.4 - 6.0 (44.3 - 48.7)
4039	R/L1, S/L2, T/L3	8	12 - 6 (4.0 - 16)	8 - 6 (10 - 16)	18	M5 ⊖	2.3 - 2.5 (20.3 - 22.1) *3
	U/T1, V/T2, W/T3	8	12 - 8 (4.0 - 10)	10 - 8 (6.0 - 10)	18	M5 ⊖	2.3 - 2.5 (20.3 - 22.1) *3
	-, +1, +2	6	10 - 6 (6.0 - 16)	8 - 6 (10 - 16)	20	M6 ⑤	5 - 5.5 (45 - 49)
	B1, B2	12	14 - 8 (2.5 - 10)	14 - 8 (2.5 - 10)	10	M4 ⊖	1.5 - 1.7 (13.3 - 15)
	⏚	6	10 - 6 (6.0 - 16)	-	-	M6 ⊕	5.4 - 6.0 (44.3 - 48.7)

Model	Terminal	Recomm. Gauge AWG, kcmil	Applicable Gauge AWG, kcmil (mm²)	IP20 Applicable Gauge *1 AWG, kcmil (mm²)	Wire Stripping Length *2 mm	Terminal Screw Size and Shape	Tightening Torque N·m (lbf·in)
4049	R/L1, S/L2, T/L3	6	10 - 6 (6.0 - 16)	10 - 6 (6.0 - 16)	18	M5	2.3 - 2.5 (19.8 - 22) *3
	U/T1, V/T2, W/T3	8	12 - 6 (4.0 - 16)	10 - 6 (6.0 - 16)	18	M5	2.3 - 2.5 (19.8 - 22) *3
	-, +1, +2	4	8 - 4 (10 - 25)	8 - 4 (10 - 25)	18	M5	2.3 - 2.5 (19.8 - 22) *3
	B1, B2	10	14 - 10 (2.5 - 6.0)	14 - 10 (2.5 - 6.0)	10	M4	1.5 - 1.7 (13.5 - 15)
	⏚	6	10 - 6 (6.0 - 16)	-	-	M6	5.4 - 6.0 (47.8 - 53.1)
4056	R/L1, S/L2, T/L3	8	12 - 4 (4.0 - 25)	10 - 4 (6.0 - 25)	18	M5	2.3 - 2.5 (19.8 - 22) *3
	U/T1, V/T2, W/T3	8	12 - 4 (4.0 - 25)	10 - 4 (6.0 - 25)	18	M5	2.3 - 2.5 (19.8 - 22) *3
	-, +1, +2	6	10 - 6 (6.0 - 16)	10 - 6 (6.0 - 16)	18	M5	2.3 - 2.5 (19.8 - 22) *3
	B1, B2	10	14 - 6 (2.5 - 16)	14 - 6 (2.5 - 16)	10	M4	1.5 - 1.7 (13.5 - 15)
	⏚	6	8 - 6 (10 - 16)	-	-	M6	5.4 - 6.0 (47.8 - 53.1)
4075	R/L1, S/L2, T/L3	6	10 - 3 (6.0 - 25)	10 - 3 (6.0 - 25)	18	M5	2.3 - 2.5 (19.8 - 22) *3
	U/T1, V/T2, W/T3	4	8 - 3 (10 - 25)	8 - 3 (10 - 25)	18	M5	2.3 - 2.5 (19.8 - 22) *3
	-, +1	4	8 - 4 (10 - 25)	8 - 4 (10 - 25)	18	M5	2.3 - 2.5 (19.8 - 22) *3
	B1, B2	8	12 - 6 (4.0 - 16)	12 - 6 (4.0 - 16)	10	M4	1.5 - 1.7 (13.5 - 15)
	⏚	6	8 - 6 (10 - 16)	-	-	M6	5.4 - 6.0 (47.8 - 53.1)
4094	R/L1, S/L2, T/L3	4	8 - 2 (10 - 35)	8 - 2 (10 - 35)	18	M5	2.3 - 2.5 (19.8 - 22) *3
	U/T1, V/T2, W/T3	4	8 - 2 (10 - 35)	8 - 2 (10 - 35)	18	M5	2.3 - 2.5 (19.8 - 22) *3
	-, +1	3	6 - 3 (16 - 25)	6 - 3 (16 - 25)	20	M6	5 - 5.5 (45 - 49)
	B1, B2	8	12 - 2 (4.0 - 35)	12 - 2 (4.0 - 35)	18	M5	2.3 - 2.5 (19.8 - 22) *3
	⏚	4	6 - 4 (16 - 25)	-	-	M6	5.4 - 6.0 (47.8 - 53.1)
4114	R/L1, S/L2, T/L3	2	4 - 1/0 (25 - 50)	2 - 1/0 (35 - 50)	27	M6	8 - 9 (71 - 80)
	U/T1, V/T2, W/T3	2	4 - 1 (25 - 50)	2 - 1 (35 - 50)	27	M6	8 - 9 (71 - 80)
	-, +1	1	2 - 1 (35 - 50)	2 - 1 (35 - 50)	27	M8	10 - 12 (89 - 107)
	B1, B2	6	10 - 2 (6.0 - 35)	10 - 2 (6.0 - 35)	21	M6	3 - 3.5 (27 - 31)
	⏚	4	6 - 4 (16 - 25)	-	-	M6	5.4 - 6.0 (47.8 - 53.1)

Model	Terminal	Recomm. Gauge AWG, kcmil	Applicable Gauge AWG, kcmil (mm²)	IP20 Applicable Gauge *1 AWG, kcmil (mm²)	Wire Stripping Length *2 mm	Terminal Screw Size and Shape	Tightening Torque N·m (lbf·in)
4140	R/L1, S/L2, T/L3	2/0	1 - 3/0 (50 - 95)	2/0 - 3/0 (70 - 95)	37	M10 ⑧	12 - 14 (107 - 124)
	U/T1, V/T2, W/T3	3/0	1/0 - 4/0 (50 - 95)	3/0 - 4/0 (95)	37	M10 ⑧	12 - 14 (107 - 124)
	-, -, +1, +1 *4	1/0	2 - 2/0 (35 - 70)	1/0 - 2/0 (50 - 70)	28	M6 ⑤	8 - 9 (71 - 80)
	B1, B2	1	3 - 1 (25 - 50)	1 (50)	28	M8 ⑥	8 - 9 (71 - 80)
	⏚	4	6 - 4 (16 - 25)	-	-	M8	9.0 - 11 (79.7 - 97.4)
4188	R/L1, S/L2, T/L3	2/0	1 - 4/0 (50 - 95)	2/0 - 4/0 (70 - 95)	37	M10 ⑧	12 - 14 (107 - 124)
	U/T1, V/T2, W/T3	3/0	1/0 - 4/0 (50 - 95)	3/0 - 4/0 (95)	37	M10 ⑧	12 - 14 (107 - 124)
	-, -, +1, +1 *4	1/0	2 - 1/0 (35 - 50)	1/0 (50)	28	M6 ⑤	8 - 9 (71 - 80)
	B1, B2	1	3 - 1/0 (25 - 50)	1 - 1/0 (50)	28	M8 ⑥	8 - 9 (71 - 80)
	⏚	4	4 - 2 (25 - 35)	-	-	M8	9.0 - 11 (79.7 - 97.4)
4225	R/L1, S/L2, T/L3	2/0 × 2P	1 - 2/0 × 2P (50 - 70 × 2P)	2/0 × 2P (70 × 2P)	-	M10	20 (177)
	U/T1, V/T2, W/T3	2/0 × 2P	1 - 2/0 × 2P (50 - 70 × 2P)	2/0 × 2P (70 × 2P)	-	M10	20 (177)
	-, +1	4/0 × 2P	2/0 - 4/0 × 2P (70 - 95 × 2P)	4/0 × 2P (95 × 2P)	-	M10	20 (177)
	+3	1/0 × 2P	2 - 1/0 × 2P (35 - 50 × 2P)	1/0 × 2P (50 × 2P)	-	M10	20 (177)
	⏚	4	4 - 350 (25 - 150)	-	-	M10	18 - 23 (159 - 204)
4270	R/L1, S/L2, T/L3	2/0 × 2P	1 - 2/0 × 2P (50 - 70 × 2P)	2/0 × 2P (70 × 2P)	-	M10	20 (177)
	U/T1, V/T2, W/T3	2/0 × 2P	1 - 2/0 × 2P (50 - 70 × 2P)	2/0 × 2P (70 × 2P)	-	M10	20 (177)
	-, +1	4/0 × 2P	2/0 - 4/0 × 2P (70 - 95 × 2P)	4/0 × 2P (95 × 2P)	-	M10	20 (177)
	+3	1/0 × 2P	2 - 1/0 × 2P (35 - 50 × 2P)	1/0 × 2P (50 × 2P)	-	M10	20 (177)
	⏚	2	4 - 350 (25 - 150)	-	-	M10	18 - 23 (159 - 204)
4325	R/L1, S/L2, T/L3	2/0 × 2P	1 - 2/0 × 2P (50 - 70 × 2P)	2/0 × 2P (70 × 2P)	-	M10	20 (177)
	U/T1, V/T2, W/T3	2/0 × 2P	1 - 2/0 × 2P (50 - 70 × 2P)	2/0 × 2P (70 × 2P)	-	M10	20 (177)
	-, +1	4/0 × 2P	2/0 - 4/0 × 2P (70 - 95 × 2P)	4/0 × 2P (95 × 2P)	-	M10	20 (177)
	+3	1/0 × 2P	2 - 1/0 × 2P (35 - 50 × 2P)	1/0 × 2P (50 × 2P)	-	M10	20 (177)
	⏚	2	2 - 350 (35 - 185)	-	-	M10	18 - 23 (159 - 204)

Model	Terminal	Recomm. Gauge AWG, kcmil	Applicable Gauge AWG, kcmil (mm²)	IP20 Applicable Gauge *1 AWG, kcmil (mm²)	Wire Stripping Length *2 mm	Terminal Screw Size and Shape	Tightening Torque N·m (lbf·in)
4380	R/L1, S/L2, T/L3	250 × 2P	3/0 - 250 × 2P (95 - 120 × 2P)	250 × 2P (120 × 2P)	-	M12	35 (310)
	U/T1, V/T2, W/T3	250 × 2P	3/0 - 250 × 2P (95 - 120 × 2P)	250 × 2P (120 × 2P)	-	M12	35 (310)
	-, +1	300 × 2P	4/0 - 300 × 2P (95 - 150 × 2P)	300 × 2P (150 × 2P)	-	M12	35 (310)
	+3	300 × 2P	4/0 - 300 × 2P (95 - 150 × 2P)	300 (150)	-	M12	35 (310)
	⏚	1	1 - 350 (50 - 185)	-	-	M12	32 - 40 (283 - 354)

*1 For IP20 protection, use wires that are in the range of applicable gauges. If your installation does not need IP20 protection, you can use smaller cables.
*2 Remove insulation from the ends of wires to expose the length of wire shown.
*3 For wire gauges more than 30 mm² (AWG 8), tighten to a tightening torque of 4.1 N·m to 4.5 N·m (36 lbf·in to 40 lbf·in).
*4 Terminals - and +1 have two screws. The Recommended Gauge is the wire gauge for one terminal.

■ Closed-Loop Crimp Terminals

To comply with UL standards on drive models 2269 to 2519 and 4225 to 4380, use UL Listed closed-loop crimp terminals and insulation caps. Use the tools recommend by the terminal manufacturer to crimp the closed-loop crimp terminal. Yaskawa recommends closed-loop crimp terminals from JST Mfg. Co., Ltd. and insulation caps from Tokyo DIP Co., Ltd.

Make sure that you comply with local standards for correct wire gauges in the region where you will use the drive. Refer to Table 5.13 and Table 5.14 to select crimp terminals as specified by drive model and wire gauge.

Note:

To comply with UL standards, use only insulated crimp terminals or crimp terminals with insulation tubing. Use UL Listed, vinyl-coated insulated copper wires for operation with a continuous maximum permitted temperature of 75 °C at 600 V.

Table 5.13 Closed-Loop Crimp Terminals and Insulation Caps: Three-Phase 200 V Class

Model	Recomm. Gauge (AWG, kcmil)					Terminal Screw Size	Crimp Terminal Model	Crimping Tool		Insulation Cap Model
	R/L1 S/L2 T/L3	U/T1 V/T2 W/T3	-, +1	+3	⏚			Tool Model	Die Jaw	
2022	-	-	-	-	10	M4	R5.5-4	YA-4	AD-900	TP-005
2031, 2041	-	-	-	-	8	M5	R8-5	YA-4	AD-901	TP-008
2059 - 2110	-	-	-	-	6	M6	R14-6	YA-4	AD-902	TP-014
2144	-	-	-	-	4	M6	R22-6	YA-5	AD-953	TP-022
2181, 2225	-	-	-	-	4	M8	R22-8	YA-5	AD-953	TP-022
2269	2/0 × 2P	2/0 × 2P	-	-	-	M10	80-10	YF-1 YET-150-1	TD-227, TD-214	TP-080
	-	-	4/0 × 2P	-	-	M10	R100-10	YF-1 YET-150-1	TD-228, TD-214	TP-100
	-	-	-	1/0 × 2P	-	M10	R60-10	YF-1 YET-150-1	TD-225, TD-213	TP-060
	-	-	-	-	3	M10	R38-10	YF-1 YET-150-1	TD-224, TD-212	TP-038
2354	2/0 × 2P	2/0 × 2P	-	-	-	M10	80-10	YF-1 YET-150-1	TD-227, TD-214	TP-080
	-	-	4/0 × 2P	-	-	M10	R100-10	YF-1 YET-150-1	TD-228, TD-214	TP-100
	-	-	-	1/0 × 2P	-	M10	R60-10	YF-1 YET-150-1	TD-225, TD-213	TP-060
	-	-	-	-	2	M10	R38-10	YF-1 YET-150-1	TD-224, TD-212	TP-038

Model	Recomm. Gauge (AWG, kcmil)					Terminal Screw Size	Crimp Terminal Model	Crimping Tool		Insulation Cap Model
	R/L1 S/L2 T/L3	U/T1 V/T2 W/T3	-, +1	+3	⏚			Tool Model	Die Jaw	
2432	250 × 2P	250 × 2P	-	-	-	M12	R150-12	YF-1 YET-300-1	TD-325, TD-313	TP-150
	-	-	300 × 2P	300 × 2P	-	M12	R150-12	YF-1 YET-300-1	TD-325, TD-313	TP-150
	-	-	-	-	1	M12	R60-12	YF-1 YET-300-1	TD-321, TD-311	TP-060
2519	250 × 2P	250 × 2P	-	-	-	M12	R150-12	YF-1 YET-300-1	TD-325, TD-313	TP-150
	-	-	300 × 2P	300 × 2P	-	M12	R150-12	YF-1 YET-300-1	TD-325, TD-313	TP-150
	-	-	-	-	1	M12	R60-12	YF-1 YET-300-1	TD-321, TD-311	TP-060

Table 5.14 Closed-Loop Crimp Terminals and Insulation Caps: Three-Phase 400 V Class

Model	Recomm. Gauge (AWG, kcmil)					Terminal Screw Size	Crimp Terminal Model	Crimping Tool		Insulation Cap Model
	R/L1 S/L2 T/L3	U/T1 V/T2 W/T3	-, +1	+3	⏚			Tool Model	Die Jaw	
4012	-	-	-	-	10	M4	R5.5-4	YA-4	AD-900	TP-005
4019, 4023	-	-	-	-	10	M5	R5.5-5	YA-4	AD-900	TP-005
4030	-	-	-	-	8	M6	R8-6	YA-4	AD-901	TP-008
4039	-	-	-	-	6	M6	R14-6	YA-4	AD-902	TP-014
4049, 4056	-	-	-	-	6	M6	R14-6	YA-4	AD-902	TP-014
4075	-	-	-	-	6	M6	R14-6	YA-4	AD-902	TP-014
4094, 4114	-	-	-	-	4	M6	R22-6	YA-5	AD-953	TP-022
4140, 4188	-	-	-	-	4	M8	R22-8	YA-5	AD-953	TP-022
4225	2/0 × 2P	2/0 × 2P	-	-	-	M10	80-10	YF-1 YET-150-1	TD-227, TD-214	TP-080
	-	-	4/0 × 2P	-	-	M10	R100-10	YF-1 YET-150-1	TD-228, TD-214	TP-100
	-	-	-	1/0 × 2P	-	M10	R60-10	YF-1 YET-150-1	TD-225, D-213	TP-060
	-	-	-	-	4	M10	R22-10	YF-1 YET-150-1	TD-223, TD-212	TP-022
4270	2/0 × 2P	2/0 × 2P	-	-	-	M10	80-10	YF-1 YET-150-1	TD-227, TD-214	TP-080
	-	-	4/0 × 2P	-	-	M10	R100-10	YF-1 YET-150-1	TD-228, TD-214	TP-100
	-	-	-	1/0 × 2P	-	M10	R60-10	YF-1 YET-150-1	TD-225, TD-213	TP-060
	-	-	-	-	2	M10	R38-10	YF-1 YET-150-1	TD-224, TD-212	TP-038
4325	2/0 × 2P	2/0 × 2P	-	-	-	M10	80-10	YF-1 YET-150-1	TD-227, TD-214	TP-080
	-	-	4/0 × 2P	-	-	M10	R100-10	YF-1 YET-150-1	TD-228, TD-214	TP-100
	-	-	-	1/0 × 2P	-	M10	R60-10	YF-1 YET-150-1	TD-225, TD-213	TP-060
	-	-	-	-	2	M10	R38-10	YF-1 YET-150-1	TD-224, TD-212	TP-038

Model	Recomm. Gauge (AWG, kcmil)					Terminal Screw Size	Crimp Terminal Model	Crimping Tool		Insulation Cap Model
	R/L1 S/L2 T/L3	U/T1 V/T2 W/T3	-, +1	+3	⏚			Tool Model	Die Jaw	
4380	250 × 2P	250 × 2P	-	-	-	M12	R150-12	YF-1 YET-300-1	TD-325, TD-313	TP-150
	-	-	300 × 2P	300 × 2P	-	M12	R150-12	YF-1 YET-300-1	TD-325, TD-313	TP-150
	-	-	-	-	1	M12	R60-12	YF-1 YET-300-1	TD-321, TD-311	TP-060

■ Factory-Recommended Branch Circuit Protection for UL Listing

Use branch circuit protection to protect against short circuits and to maintain compliance with UL 61800-5-1. Yaskawa recommends connecting semiconductor protection fuses on the input side for branch circuit protection. Refer to Table 5.15 and Table 5.16 for more information about recommended fuses.

⚠ WARNING Electrical Shock Hazard

After the drive blows a fuse or trips an ELCB, do not immediately energize the drive or operate peripheral devices. Wait for the time specified on the warning label at a minimum and make sure that all indicators are OFF. Then check the wiring and peripheral device ratings to find the cause of the problem. If you do not know the cause of the problem, contact Yaskawa before you energize the drive or peripheral devices.
If you do not fix the problem before you operate the drive or peripheral devices, it can cause serious injury or death.

- 200 V Class
  Use the fuses specified in this document to prepare the drive for use on a circuit that supplies not more than 100,000 RMS and not more than 240 Vac when there is a short circuit in the power supply.
- 400 V Class
  Use the fuses specified in this document to prepare the drive for use on a circuit that supplies not more than 100,000 RMS and not more than 480 Vac when there is a short circuit in the power supply.

The built-in short circuit protection of the drive does not provide branch circuit protection. The user must provide branch circuit protection as specified by the National Electric Code (NEC), the Canadian Electric Code, Part I (CEC), and local codes.

Three-Phase 200 V Class

Table 5.15 Factory-Recommended Branch Circuit Protection: 200 V Class

Drive Model	Maximum Applicable Motor Output kW (HP)	Input Current Rating A	Semiconductor Protection Fuse Rated Current Manufacturer: EATON/Bussmann
2022	3.7 (5)	18.2	FWH-80B FWH-100B *1
2031	5.5 (7.5)	26.5	FWH-125B
2041	7.5 (10)	35.5	FWH-150B
2059	11 (15)	51.2	FWH-200B
2075	15 (20)	69	FWH-225A
2094	18.5 (25)	84.4	FWH-225A FWH-250A *1
2110	22 (30)	72	FWH-225A FWH-250A *1
2144	30 (40)	97.3	FWH-275A FWH-300A *1
2181	37 (50)	119.2	FWH-275A FWH-350A *1
2225	45 (60)	144.3	FWH-325A FWH-450A *1
2269	55 (75)	175.4	FWH-600A
2354	75 (100)	237.5	FWH-800A

Drive Model	Maximum Applicable Motor Output kW (HP)	Input Current Rating A	Semiconductor Protection Fuse Rated Current Manufacturer: EATON/Bussmann
2432	90 (125)	283.9	FWH-1000B
2519	110 (150)	345.6	FWH-1000B

*1 Yaskawa recommends a fuse with a large rated current for applications with repeated loads.

Three-Phase 400 V Class

Table 5.16 Factory-Recommended Branch Circuit Protection: 400 V Class

Drive Model	Maximum Applicable Motor Output kW (HP)	Input Current Rating A	Semiconductor Protection Fuse Rated Current Manufacturer: EATON/Bussmann
4012	3.7 (5)	10.3	FWH-60B
4019	5.5 (7.5)	13.9	FWH-80B
4023	7.5 (10)	18.7	FWH-90B
4030	11 (15)	26.9	FWH-150B
4039	15 (20)	36.3	FWH-200B
4049	18.5 (25)	44.4	FWH-200B
4056	22 (30)	37.9	FWH-225A
4075	30 (40)	51.2	FWH-250A
4094	37 (50)	62.8	FWH-275A
4114	45 (60)	75.9	FWH-275A
4140	55 (75)	92.3	FWH-300A
4188	75 (100)	125	FWH-325A FWH-400A *1
4225	90 (125)	149.4	FWH-500A
4270	110 (150)	181.9	FWH-600A
4325	132 (175)	217.5	FWH-700A
4380	160 (200)	262.7	FWH-800A

*1 Yaskawa recommends a fuse with a large rated current for applications with repeated loads.

◆ UL Standards Compliance for DC Power Supply Input

To comply with UL Standards, install a fuse for the DC power supply input.

Figure 5.18 shows a wiring example for a DC power supply that has two drives connected in parallel.

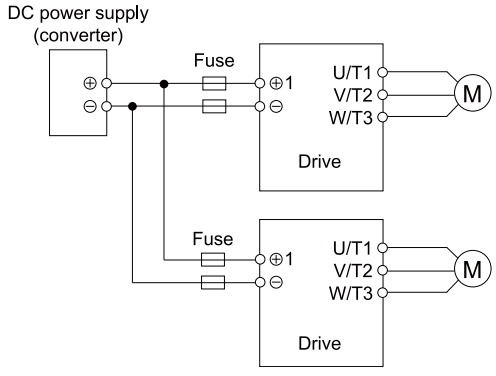

Figure 5.18 Wiring Example for DC Power Supply Input

⚠ WARNING Electrical Shock Hazard
Do not ground the main circuit bus.
Incorrect wiring can cause serious injury or death.

Note:
Install a fuse for each drive when operating more than one drive. If one fuse blows, replace all fuses.

Refer to Table 5.17 and Table 5.18 for the recommended fuses.

Table 5.17 Recommended Fuse (Three-Phase 200 V Class)

Drive Model	Fuse Manufacturer: Bussmann	
	Model	Qty
2022	FWH-80B	2
2031	FWH-125B	2
2041	FWH-150B	2
2059	FWH-200B	2
2075	FWH-250A	2
2094	FWH-250A FWH-300A *1	2
2110	FWH-250A FWH-275A *1	2
2144	FWH-300A FWH-350A *1	2

Drive Model	Fuse Manufacturer: Bussmann	
	Model	Qty
2181	FWH-350A FWH-450A *1	2
2225	FWH-450A FWH-600A *1	2
2269	FWH-600A FWH-700A *1	2
2354	FWH-800A FWH-1000B *1	2
2432	FWH-1000B	2
2519	FWH-1000B	2

*1 Yaskawa recommends a fuse with a large rated current for applications with repeated loads of approximately 150%.

Table 5.18 Recommended Fuse (Three-Phase 400 V Class)

Drive Model	Fuse Manufacturer: Bussmann	
	Model	Qty
4012	FWH-60B	2
4019	FWH-80B	2
4023	FWH-90B	2
4030	FWH-150B	2
4039	FWH-200B	2
4049	FWH-200B	2
4056	FWH-225A	2
4075	FWH-250A	2
4094	FWH-275A	2
4114	FWH-275A	2

Drive Model	Fuse Manufacturer: Bussmann	
	Model	Qty
4140	FWH-300A FWH-325A *1	2
4188	FWH-400A FWH-450A *1	2
4225	FWH-500A FWH-600A *1	2
4270	FWH-600A FWH-700A *1	2
4325	FWH-700A FWH-800A *1	2
4380	FWH-800A FWH-1000B *1	2

*1 Yaskawa recommends a fuse with a large rated current for applications with repeated loads of approximately 150%.

◆ Low Voltage Wiring for Control Circuit Terminals

You must provide low voltage wiring as specified by the National Electric Code (NEC), the Canadian Electric Code, Part I (CEC), and local codes. Yaskawa recommends the NEC class 1 circuit conductor. Use a UL approved class 2 power supply for external power supply.

Table 5.19 Control Circuit Terminal Power Supplies

Input/Output	Terminals	Power Supply Specifications
Digital input	S1 - S10, SN, SC, SP	Uses the LVLC power supply in the drive. Use a UL Listed class 2 power supply for external power supply.
Analog input	A1 - A3, AC, +V, -V	Uses the LVLC power supply in the drive. Use a UL Listed class 2 power supply for external power supply.
Analog output	FM, AM, AC	Uses the LVLC power supply in the drive.
Safe disable input	H1, H2, HC	Uses the LVLC power supply in the drive. Use a UL Listed class 2 power supply for external power supply.
Open-collector output	P1, C1, P2, C2	Use a UL Listed class 2 power supply.

Input/Output	Terminals	Power Supply Specifications
Serial communication input/output	D+, D-, AC	Uses the LVLC power supply in the drive. Use a UL Listed class 2 power supply for an external power supply.
24 V external power supply	PS, AC	Use a UL Listed class 2 power supply.

◆ Drive Motor Overload and Overheat Protection

The drive motor overload and overheat protection function complies with the National Electric Code (NEC) and the Canadian Electric Code, Part I (CEC).

Set the Motor Rated Current and *L1-01 [Motor Overload (oL1) Protection] to L1-04 [Motor Thermistor oH Fault Select]* correctly to enable motor overload and overheat protection.

Refer to the control method and set the motor rated current with *E2-01 [Motor Rated Current (FLA)]* or *E5-03 [PM Motor Rated Current (FLA)]*.

■ E2-01: Motor Rated Current (FLA)

No. (Hex.)	Name	Description	Default (Range)
E2-01 (030E)	Motor Rated Current (FLA)	V/f OLV CLV CLV/PM Sets the motor rated current in amps.	Determined by o2-04 (10% to 200% of the continuous rated output current)

Note:
- If *E2-01 < E2-03 [Motor No-Load Current]*, the drive will detect *oPE02 [Parameter Range Setting Error]*.
- The display units are different for different models:
  - 0.01 A: models 2022 - 2041, 4012 - 4023
  - 0.1 A: models 2059 - 2519, 4030 - 4380

The value set for *E2-01* becomes the reference value for motor protection and the torque limit. Enter the motor rated current written on the motor nameplate. Auto-Tuning the drive will automatically set *E2-01* to the value input for "Motor Rated Current".

■ E5-03: PM Motor Rated Current (FLA)

No. (Hex.)	Name	Description	Default (Range)
E5-03 (032B)	PM Motor Rated Current (FLA)	V/f OLV CLV CLV/PM Sets the PM motor rated current (FLA).	Determined by o2-04 (10% to 200% of the continuous rated output current)

Note:

The display units are different for different models:
- 0.01 A: models 2022 - 2041, 4012 - 4023
- 0.1 A: models 2059 - 2519, 4030 - 4380

The drive automatically sets *E5-03* to the value input for "PM Motor Rated Current" after you do these types of Auto-Tuning:

- PM Motor Parameter Settings
- PM Stationary Auto-Tuning
- PM Rotational Auto-Tuning

■ L1-01: Motor Overload (oL1) Protection

No. (Hex.)	Name	Description	Default (Range)
L1-01 (0480)	Motor Overload (oL1) Protection	V/f OLV CLV CLV/PM Sets the motor overload protection with electronic thermal protectors.	Determined by A1-02 (0 - 3, 5, 6)

Note:
- The default setting and setting range change when *A1-02 [Control Method Selection]* changes:
  - When *A1-02 = 0, 2, 3 [V/f, OLV, CLV]*, the default setting is *1*, and the setting range is *0 to 3, 6*.
  - When *A1-02 = 7 [CLV/PM]*, the default setting is *5*, and the setting range is *0, 5*.
- When only one motor is connected to a drive, set *L1-01 = 1 to 6 [Enabled]*. External thermal relays are not necessary in these conditions.

This parameter enables and disables the motor overload protection with electronic thermal protectors.

The cooling capability of the motor changes when the speed control range of the motor changes. Use an electronic thermal protector that aligns with the permitted load characteristics of the motor to select motor protection.

The electronic thermal protector of the drive uses these items to calculate motor overload tolerance and supply overload protection for the motor:

- Output current
- Output speed
- Motor thermal characteristics
- Time characteristics

If the drive detects motor overload, the drive will trigger an *oL1 [Motor Overload]* and stop the drive output.

Set *H2-01 = 1F [Term M1-M2 Function Selection = Motor Overload Alarm (oL1)]* to set a motor overload alarm. If the motor overload level is more than 90% of the *oL1* detection level, the output terminal activates and triggers an overload alarm.

0 : Disabled

1 : Variable Torque

Use this setting for general-purpose motors with a 60 Hz base frequency.

The overload tolerance decreases as motor speed decreases because the cooling fan speed decreases and the ability of the motor to cool decreases in the low speed range.

The overload tolerance characteristics of the motor change the trigger point for the electronic thermal protector. This provides motor overheat protection from low speed to high speed across the full speed range.

Load Tolerance	Cooling Capability	Overload Characteristics (at 100% motor load)
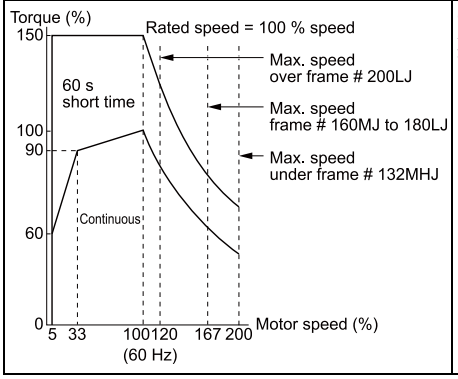	This motor is designed to operate with commercial line power. Operate at a 60 Hz base frequency to maximize the motor cooling ability.	If the motor operates at frequencies less than 60 Hz, the drive will detect *oL1*. The drive triggers a fault relay output and the motor coasts to stop.

2 : Constant Torque 10:1 Speed Range

Use this setting for drive-dedicated motors with a speed range for constant torque of 1:10.

The speed control for this motor is 10% to 100% when at 100% load. Operating slower than 10% speed at 100% load will cause motor overload.

Load Tolerance	Cooling Capability	Overload Characteristics (at 100% motor load)
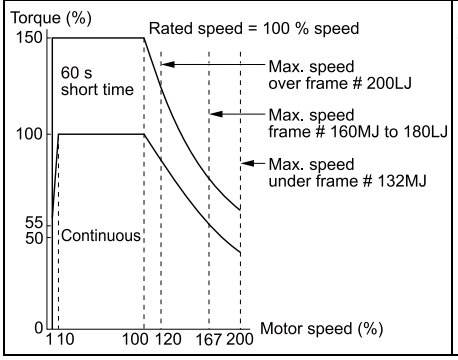	This motor is designed to withstand increased temperatures during continuous operation in the low speed range (10% base frequency).	The motor operates continuously at 10% to 100% base frequency. Operating slower than 10% speed at 100% load will cause motor overload.

3 : Constant Torque 100:1 SpeedRange

Use this setting for vector motors with a speed range for constant torque of 1:100.

The speed control for this motor is 1% to 100% when at 100% load. Operating slower than 1% speed at 100% load will cause motor overload.

Load Tolerance	Cooling Capability	Overload Characteristics (at 100% motor load)
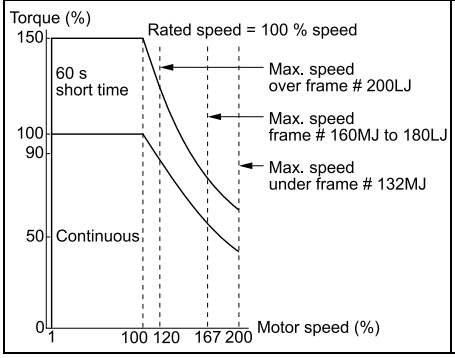	This motor is designed to withstand increased temperatures during continuous operation in the low speed range (1% base frequency).	The motor operates continuously at 1% to 100% base frequency. Operating slower than 1% speed at 100% load will cause motor overload.

5 : PM Constant Torque

Use this setting with a PM motor for constant torque that has a speed range for constant torque of 1:500.

The speed control for this motor is 0.2% to 100% when at 100% load. Operating slower than 0.2% speed at 100% load will cause motor overload.

Load Tolerance	Cooling Capability	Overload Characteristics (at 100% motor load)
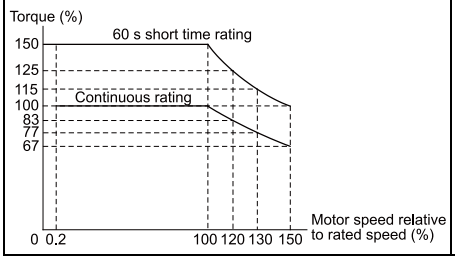	This motor is designed to withstand increased temperatures during continuous operation in the low speed range (0.2% base frequency).	The motor operates continuously at 0.2% to 100% rated speed. Operating slower than 0.2% speed at 100% load will cause motor overload.

6 : Variable Torque (50Hz)

Use this setting for general-purpose motors with a 50 Hz base frequency.

The overload tolerance decreases as motor speed decreases because the cooling fan speed decreases and the ability of the motor to cool decreases in the low speed range.

The overload tolerance characteristics of the motor change the trigger point for the electronic thermal protector. This provides motor overheat protection from low speed to high speed across the full speed range.

Load Tolerance	Cooling Capability	Overload Characteristics (at 100% motor load)
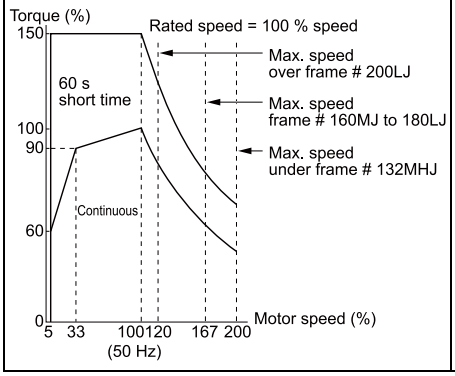	This motor is designed to operate with commercial line power. Operate at a 50 Hz base frequency to maximize the motor cooling ability.	If the motor operates at frequencies less than commercial line power, the drive will detect *oL1*. The drive triggers a fault relay output and the motor coasts to stop.

■ L1-02: Motor Overload Protection Time

No. (Hex.)	Name	Description	Default (Range)
L1-02 (0481) Expert	Motor Overload Protection Time	V/f OLV CLV CLV/PM Sets the operation time for the electronic thermal protector of the drive to prevent damage to the motor. Usually it is not necessary to change this setting.	1.0 min (0.1 - 5.0 min)

Set the overload tolerance time to the length of time that the motor can operate at 150% load from continuous operation at 100% load.

When the motor operates at 150% load continuously for 1 minute after continuous operation at 100% load (hot start), the default setting triggers the electronic thermal protector.

Figure 5.19 shows an example of the electronic thermal protector operation time. Motor overload protection operates in the range between a cold start and a hot start.

This example shows a general-purpose motor operating at the base frequency with *L1-02* set to 1.0 min.

- Cold start
  Shows the motor protection operation time characteristics when the overload occurs immediately after starting operation from a complete stop.
- Hot start
  Shows the motor protection operation time characteristics when overload occurs from continuous operation below the motor rated current.

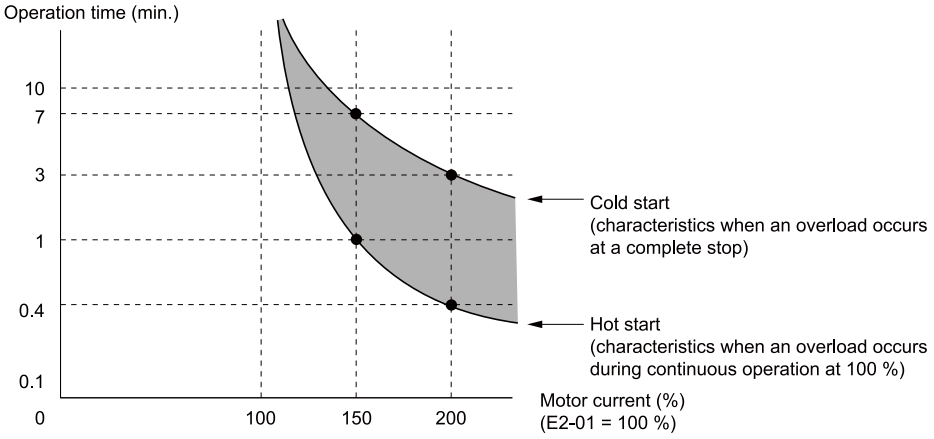

Figure 5.19 Protection Operation Time for a General-purpose Motor at Rated Output Speed

■ L1-03: Motor Thermistor oH Alarm Select

No. (Hex.)	Name	Description	Default (Range)
L1-03 (0482) Expert	Motor Thermistor oH Alarm Select	V/f OLV CLV CLV/PM Sets drive operation when the PTC input signal entered into the drive is at the *oH3 [Motor Overheat Alarm]* detection level.	3 (0 - 3)

0 : Ramp to Stop

The drive ramps the motor to stop in the deceleration ramp. Fault relay output terminal MA-MC turns ON, and MB-MC turns OFF.

1 : Coast to Stop

The output turns off and the motor coasts to stop. Fault relay output terminal MA-MC turns ON, and MB-MC turns OFF.

2 : Emergency Stop (Use C1-09)

The drive stops the motor in the deceleration ramp set in *C1-09 [Emergency Stop Ramp]*. Fault relay output terminal MA-MC turns ON, and MB-MC turns OFF.

3 : Alarm Only

The keypad shows *oH3* and the drive continues operation. The output terminal set for *Alarm [H2-01 to H2-05 = 10]* activates.

■ L1-04: Motor Thermistor oH Fault Select

No. (Hex.)	Name	Description	Default (Range)
L1-04 (0483) Expert	Motor Thermistor oH Fault Select	V/f OLV CLV CLV/PM Sets the drive operation when the PTC input signal to the drive is at the *oH4 [Motor Overheat Fault (PTC Input)]* detection level.	1 (0 - 2)

0 : Ramp to Stop

The drive ramps the motor to stop in the deceleration ramp. Fault relay output terminal MA-MC turns ON, and MB-MC turns OFF.

1 : Coast to Stop

The output turns off and the motor coasts to stop. Fault relay output terminal MA-MC turns ON, and MB-MC turns OFF.

2 : Emergency Stop (Use C1-09)

The drive stops the motor in the deceleration ramp set in *C1-09 [Emergency Stop Ramp]*. Fault relay output terminal MA-MC turns ON, and MB-MC turns OFF.

5.4 China RoHS Compliance



Figure 5.20 China RoHS Mark

The China RoHS mark is displayed on products containing six specified hazardous substances that are in excess of regulatory limits, based on the “Administrative Measures for the Restriction of the Use of Hazardous Substances in Electrical and Electronic Products” and “Marking for the Restricted Use of Hazardous Substances in Electronic and Electrical Products” (SJ/T 11364-2014), which were promulgated on January 6, 2016. The number displayed in the center of the mark indicates the environment-friendly use period (number of years) in which electrical and electronic products that are being produced, sold, or imported to China can be used. The date of manufacture of the electrical and electronic product is the starting date of the environment-friendly use period for the product. The six specified hazardous substances contained in the product will not leak outside of the product during normal use within this period and will have no serious impact on the environment, the human body, or property.

The environment-friendly use period for this product is 15 years. This period is not the product warranty period.

◆ Information on Hazardous Substances in This Product

Table 5.20 shows the details on hazardous substances contained in this product.

Table 5.20 Contents of Hazardous Substances in This Product

Parts Name	Hazardous Substances					
	Lead (Pb)	Mercury (Hg)	Cadmium (Cd)	Hexavalent Chromium (Cr(VI))	Polybrominated Biphenyls (PBB)	Polybrominated Diphenyl Ethers (PBDE)
Circuit Board	×	○	○	○	○	○
Electronic Parts	×	○	○	○	○	○
Brass Screw	×	○	○	○	○	○
Aluminum Die Casting	×	○	○	○	○	○

This table has been prepared in accordance with the provisions outlined in SJ/T 11364.

○: Indicates that said hazardous substance contained in all of the homogeneous materials for this part is below or equal to the limit requirement of GB/T 26572.

×: Indicates that said hazardous substance contained in at least one of the homogeneous materials used for this part is above the limit requirement of GB/T 26572.

Note:

This product complies with EU RoHS directives. In this table, “×” indicates that hazardous substances that are exempt from EU RoHS directives are contained.

5.5 对应中国RoHS指令



图 5.21 中国RoHS标志

中国RoHS标志依据2016年1月6日公布的《电器电子产品有害物质限制使用管理办法》，以及《电子电气产品有害物质限制使用标识要求》（SJ/T 11364-2014）作成。电子电气产品中特定6种有害物质的含量超过规定值时，应标识此标志。中间的数字为在中国生产销售以及进口的电子电气产品的环保使用期限（年限）。电子电气产品的环保使用期限从生产日期算起。在期限内，正常使用产品的过程中，不会有特定的6种有害物质外泄进而对环境、人和财产造成深刻影响。

本产品的环保使用期限为15年。但需要注意的是环保使用期限并非产品的质量保证期限。

◆ 本产品中含有有害物质的信息

本产品中所含有害物质的详细信息如表 5.21所示。

表 5.21 本产品中有害物质的名称及含量

部件名称	有害物质					
	铅 (Pb)	汞 (Hg)	镉 (Cd)	六价铬 (Cr(VI))	多溴联苯 (PBB)	多溴二苯醚 (PBDE)
实装基板	×	○	○	○	○	○
电子元件	×	○	○	○	○	○
黄铜螺钉	×	○	○	○	○	○
铝压铸	×	○	○	○	○	○

本表格依据SJ/T 11364的规定编制。
○:表示该有害物质在该部件所有均质材料中的含量均在GB/T 26572规定的限量要求以下。
×:表示该有害物质至少在该部件的某一均质材料中的含量超出GB/T 26572规定的限量要求。
（注） 本产品符合欧盟RoHS指令。上表中的"×"表示含有欧盟RoHS指令豁免的有害物质。

5.6 Safe Disable Input

This section gives precautions to support the Safe Disable input. Contact Yaskawa for more information.

The safety function complies with the standards shown in Table 5.22.

Table 5.22 Applied Safety Standards and Unified Standards

Safety Standards	Unified Standards
Functional Safety	IEC/EN 61508 (SIL3)
	IEC/EN IEC 62061 (Maximum SIL3)
	IEC/EN 61800-5-2 (SIL3)
Machine Safety	ISO/EN ISO 13849-1:2015 (Cat.3, PL e)
EMC	IEC/EN 61000-6-7

Note:
- SIL = Safety Integrity Level.
- SILCL = SIL Claim Limit.

◆ Safe Disable Specifications

The Safe Disable input provides the stop function that complies with “Safe Torque Off” as specified by IEC/EN 61800-5-2. The Safe Disable input meets the requirements of EN ISO 13849-1 and IEC/EN 61508. It also has a safety status monitor to detect safety circuit errors.

When you install the drive as a component in a system, you must make sure that the system complies with the applicable safety standards.

Refer to Table 5.23 for safety function specifications.

Table 5.23 Safe Disable Specifications

Item		Description	
Input/Output		• Input: 2 Safe Disable input (H1, H2) Signal ON level: 18 Vdc to 28 Vdc Signal OFF level: -4 Vdc to +4 Vdc • Output: 1 MFDO safety monitor output for external device monitor (EDM)	
Response time from when the input opens to when the drive output stops		3 ms or less	
Response time from when the H1 and H2 terminal inputs open to when the EDM signal operates		20 ms or less	
Mission time *1		10 years	20 years
Failure probability	Less frequent operation request mode	PFD = 9.00E-6	PFD = 1.79E-5
	Frequent operation request mode or continuous mode	PFH = 1.07E-9	PFH = 1.07E-9
Performance level		e	
HFT (hardware fault tolerance)		N = 1	
Type of subsystem		Type B	
MTTFD		High (2681 years)	
DCavg		Medium (90.53%)	

*1 Parameter used for the statistical calculation required by functional safety standards and this is not linked to the warranty/guarantee period.

Note:

EDM = External Device Monitoring

PFD = Probability of Failure on Demand

PFH = Probability of Dangerous Failure per Hour

◆ Notes

⚠ DANGER **Sudden Movement Hazard**
When you use the Safe Disable function in the safety system of a machine, do a full risk assessment for the system to make sure that all parts of the system comply with applicable safety standards.
Incorrect application of the Safe Disable function can cause serious injury or death.

⚠ DANGER **Sudden Movement Hazard**
If the output circuit of the drive is damaged and the Safe Disable function turns OFF the drive output to a permanent magnet (PM) motor, the motor can rotate 180 electrical degrees. Prevent damage to equipment and injury to personnel during this condition.
Sudden motor movement can cause serious injury or death. It is possible for current to flow through the motor winding in these conditions.

⚠ DANGER **Electrical Shock Hazard**
The Safe Disable function will not prevent electrical shock. Disconnect all power to the drive and wait for the time specified on the warning label before you remove covers. Check the drive for dangerous voltages before servicing or repair work.
If you do work on the drive when it is energized and there is no cover over the electronic circuits, it can cause serious injury or death.

⚠ WARNING **Sudden Movement Hazard**
Although the Safe Disable function is in operation, gravity or other external forces in the vertical axis can move the motor.
Incorrect application of the Safe Disable function can cause serious injury or death.

⚠ WARNING **Sudden Movement Hazard**
Do not use the drive output signals to control external holding brakes or dynamic brakes for functional safety. Use a system that conforms to the functional safety requirements.
Incorrect application of the Safe Disable function can cause serious injury or death. Systems that use drive output signals (including EDM) for safety are not safe because drive output signals are not safety components.

⚠ WARNING **Sudden Movement Hazard**
Connect the Safe Disable inputs to the devices as specified by the safety requirements.
If you connect the Safe Disable inputs incorrectly, it can cause serious injury or death.

⚠ WARNING **Sudden Movement Hazard**
To use the Safe Disable inputs, remove the jumpers between terminals H1-HC and H2-HC.
If the Safe Disable circuit does not work correctly, it can cause serious injury or death.

⚠ WARNING **Sudden Movement Hazard**
When you clear the Safe Disable input, make sure that the Safe Disable Monitor output operates correctly as the specification for Safe Disable function.
If the Safe Disable circuit does not operate correctly, it can cause serious injury or death.

⚠ WARNING **Sudden Movement Hazard**
Regularly examine the Safe Disable input and all other safety features.
A system that does not operate correctly can cause serious injury or death.

⚠ WARNING **Sudden Movement Hazard**
Only let approved personnel who know about the drive, instruction manual, and safety standards wire, examine, and maintain the Safe Disable input.
If personnel are not approved, it can cause serious injury or death.

⚠ WARNING Sudden Movement Hazard

Only use the Safe Disable Monitor (multi-function output terminal set to the EDM function) to monitor the Safe Disable status or to find a malfunction in the Safe Disable inputs. The monitor output is not a safety output.
If you use the Safe Disable Monitor incorrectly, it can cause death or serious injury.

Note:
- When you use a drive with a built-in safety function, you must replace it 10 years after first use.
- A maximum of 3 ms will elapse from when terminals H1 or H2 shut off until the drive switches to the "Safe Torque Off" status. Set the OFF status for terminals H1 and H2 to hold for at least 3 ms. The drive may not be able to switch to the "Safe Torque Off" status if terminals H1 and H2 are only open for shorter than 3 ms.
- Safe Disable input wiring should not be longer than 30 m (98 ft).

◆ Using the Safe Disable Function

■ Safe Disable Circuit

The Safe Disable circuit has two isolated channels (terminals H1 and H2) that stop the output transistors. The input can use the internal power supply of the drive.

Set the EDM function to one of the MFDO terminals *[H2-xx = 21 or 121]* to monitor the status of the Safe Disable function. This is the "Safe Disable monitor output function".

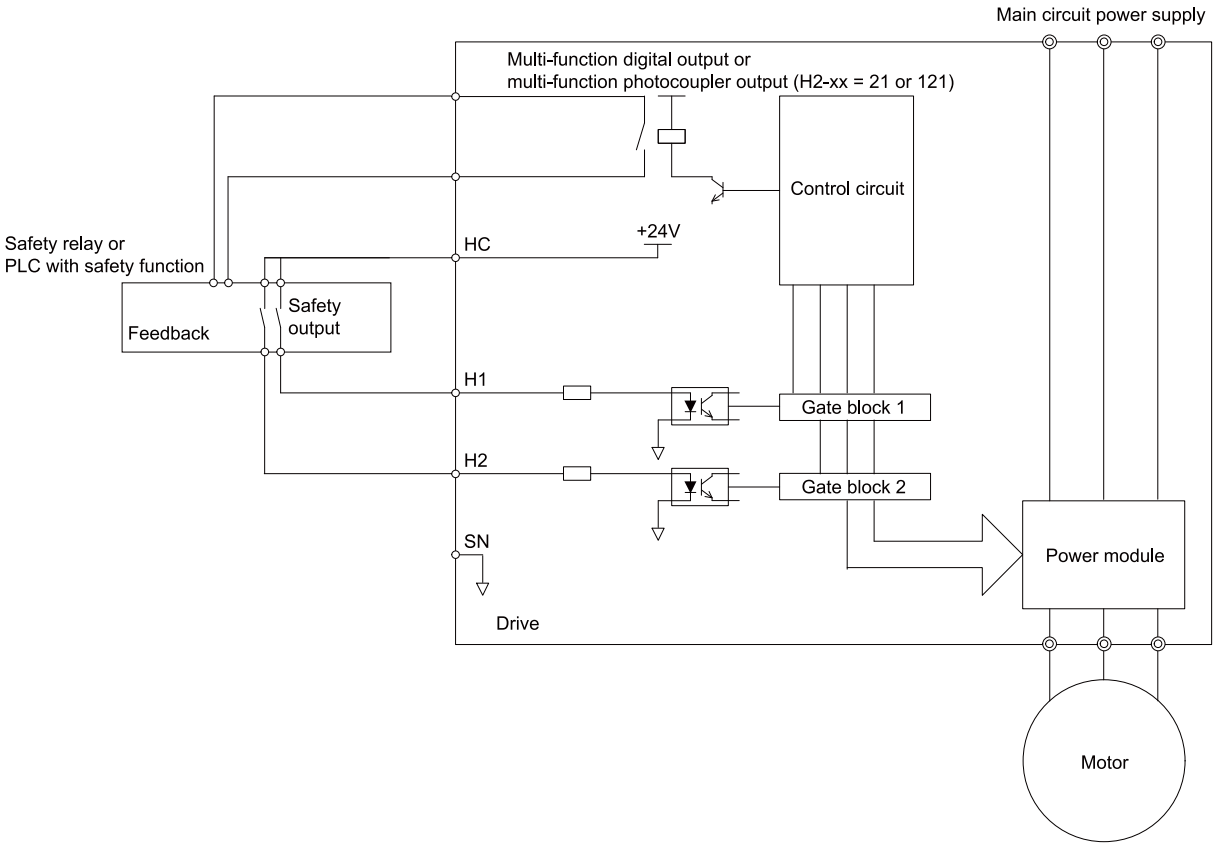

Figure 5.22 Safe Disable Function Wiring Example

■ Connect Safe Disable Input Contacts to Multiple Drives

To Use the Drive Internal Power Supply

Figure 5.23 shows an example of how to connect Safe Disable contacts.

From the terminals HC-SN of drive 1, supply the power for the Safe Disable function for the applicable drives. These conditions limit the number of units to connect:

- Internal power supply capacity
- Number of MFDIs used
- Supply current to the external sensors

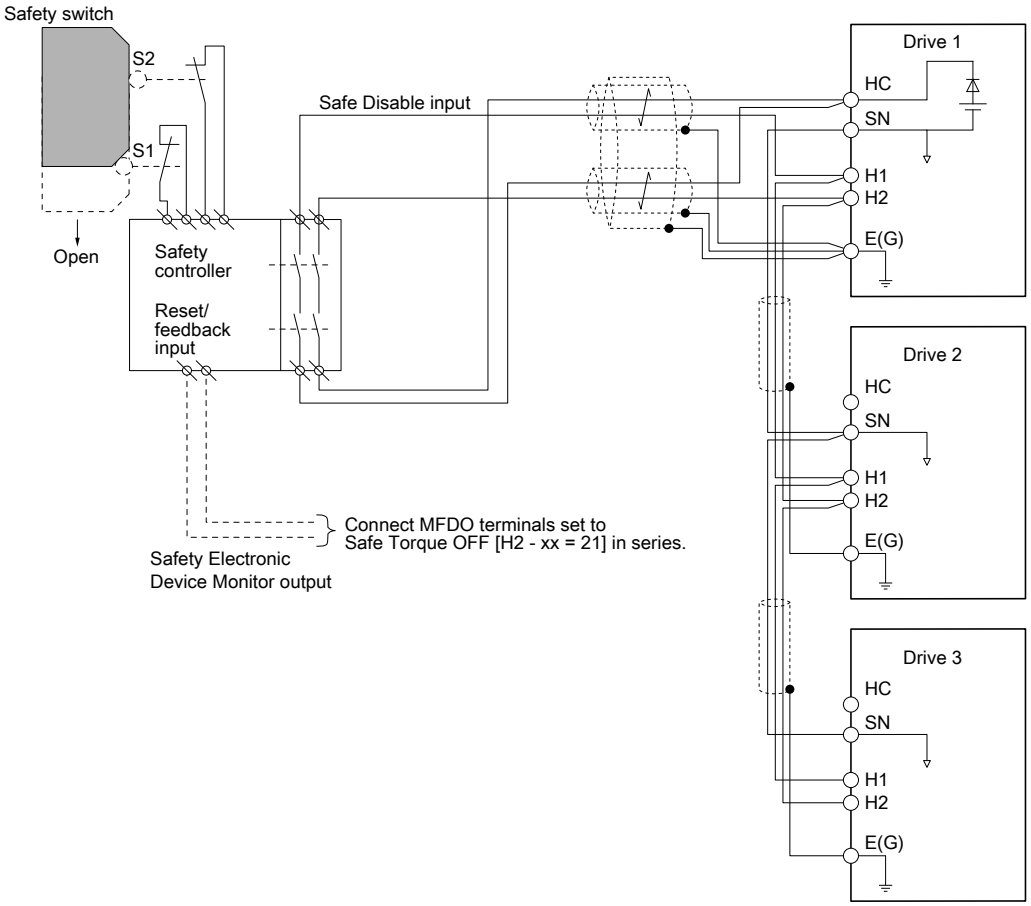

Figure 5.23 Connection Example to Use the Internal Power Supply

To Use 24 V External Power Supply

Figure 5.24 shows an example of how to connect Safe Disable contacts. These conditions limit the number of units to connect:

- External power supply capacity
- Number of MFDIs used
- Supply current to the external sensors

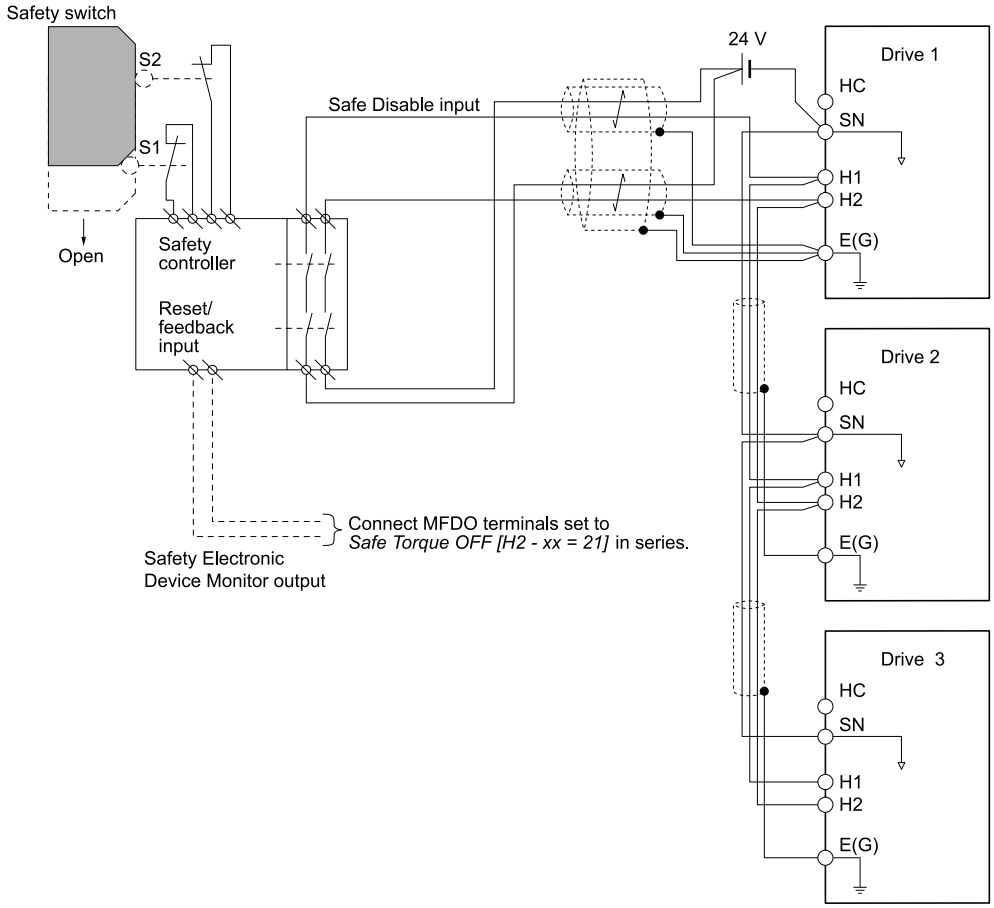

Figure 5.24 Connection Example to Use 24 V External Power Supply

The Number of Possible Units to Connect

Power Supply	MFDI	24 V Output	Number of Drive Units
Internal power supply (Drive 1)	Yes (10-channel input)	Yes *1	2
		No	14
	No	Yes *1	7
		No	19
External power supply	-		Different for different external power supply capacities *2

*1 This is when you use a maximum of 150 mA.
*2 24 V, 12 mA is necessary for each drive.

Use the this formula to calculate the number of units to connect:

$$n = (Io_{max} - I_{MFDI} \times n_{MFDI} - I_{sensor}) / I_{safety}$$

- n: Number of units to connect
- Io_{max}: Maximum current that can be supplied from the power supply (234 mA for the internal power supply)
- I_{MFDI}: Current consumed per MFDI (6 mA)
- n_{MFDI}: Maximum number of MFDIs that can be activated at the same time (maximum of 10-channel)
- I_{sensor}: Current externally supplied for sensor power supply (maximum of 150 mA)
- I_{safety}: Current consumed by Safe Disable terminals H1 and H2 (12 mA)

Note:
Round the values off to the first decimal place.

■ Enabling and Disabling the Drive Output (“Safe Torque Off”)

Refer to Figure 5.25 for an example of drive operation when the drive changes from “Safe Torque Off” status to usual operation.

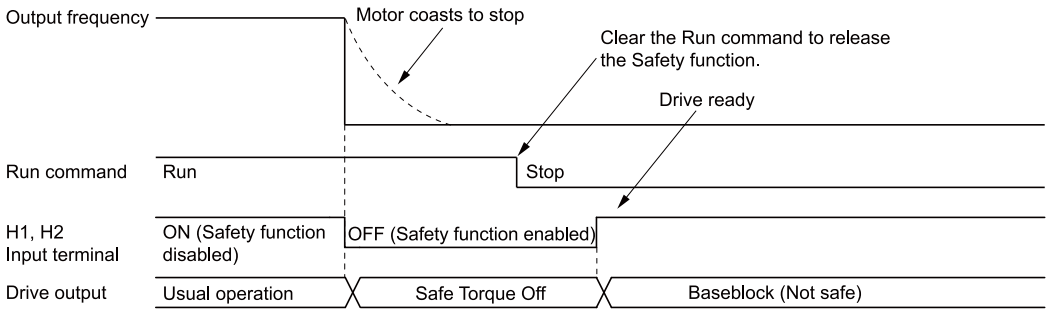

Figure 5.25 Safe Disable Operation

Switching from Usual Operation to "Safe Torque Off"

Turn OFF (open) safety input terminal H1 or H2 to enable the Safe Disable function. When the Safe Disable function is enabled while the motor is operating, the drive output and motor torque turn off and the motor always coasts to stop. The *b1-03 [Stopping Method Selection]* setting does not have an effect on the stopping method.

The "Safe Torque Off" status is only possible with the Safe Disable function. Clear the Up/Down command to stop the drive. Turning off drive output (a baseblock condition) ≠ "Safe Torque Off".

Note:
- When it is necessary to ramp to stop the motor, do not turn off terminals H1 and H2 until the motor fully stops. This will prevent the motor from coasting to stop during usual operation.
- A maximum of 3 ms will elapse from when terminals H1 or H2 shut off until the drive switches to the "Safe Torque Off" status. Set the OFF status for terminals H1 and H2 to hold for at least 3 ms. The drive may not be able to switch to the "Safe Torque Off" status if terminals H1 and H2 are only open for shorter than 3 ms.

Going from "Safe Torque Off" to Usual Operation

The safety input will only release when there is no Up/Down command.

- During Stop
  When the Safe Disable function is triggered during stop, close the circuit between terminals H1-HC and H2-HC to disable "Safe Torque Off". Enter the Up/Down command after the drive stops correctly.
- During Run
  If you trigger the Safe Disable function during run, clear the Up/Down command, then close the circuit between terminals H1-HC and H2-HC to disable "Safe Torque Off". Enter the Stop command, then enter the Up/Down command when terminals H1 and H2 are activated.

To release the "Safe Torque Off" state, activate (close) terminals H1 and H2.

When you enter the Up/Down command before terminals H1 and H2 are activated, drive operation is different for different *L8-88 [Safe Disable Operation Mode]* settings:

- When *L8-88 = 0 [Mode 0 (Alarm-On, Ready-Off)]*, you must cycle the Up/Down command to start the motor.
- When *L8-88 = 1 [Mode 1 (Alarm-Off, Ready-On)]* (default), the drive starts the motor immediately after the "Safe Torque Off" state releases.

When *L8-88 = 1*, you can use *S6-16 [BaseBlock (BB) Restart Selection]* to set how the drive behaves when terminals H1 and H2 are activated and deactivated while the Up/Down command stays active.

- When *S6-16 = 0 [Disabled]* (default), the drive will not restart and you must cycle the Up/Down command.
- When *S6-16 = 1 [Enabled]*, the drive will restart immediately when terminals H1 and H2 are activated.

■ Safe Disable Monitor Output Function and Keypad Display

Refer to Table 5.24 for information about the relation between the input channel status, Safety monitor output status, and drive output status.

Table 5.24 Safe Disable Input and External Device Monitor (EDM) Terminal Status

Input Channel Status	Input 1 (H1-HC)	ON (Close the circuit)	ON (Close the circuit)	OFF (Open)	OFF (Open)
	Input 2 (H2-HC)	ON (Close the circuit)	OFF (Open)	ON (Close the circuit)	OFF (Open)
MFDO Terminal (H2-xx = 21)	MFDO Terminal (H2-xx = 21)	OFF	OFF	OFF	ON
	MFDO Terminal (H2-xx = 121)	ON	ON	ON	OFF
MFDO Terminal (H2-xx = 58)	MFDO Terminal (H2-xx = 58)	OFF	ON	ON	ON
	MFDO Terminal (H2-xx = 158)	ON	OFF	OFF	OFF
Drive Output Status		Baseblock (Drive ready)	Safety status (STo)	Safety status (STo)	Safety status (STo)
Keypad Display		Normally displayed	SToF (Flashing)	SToF (Flashing)	STo (Flashing)
LED Status Ring		Ready: Illuminated	ALM/ERR: Flashing	ALM/ERR: Flashing	Ready: Flashing
MEMOBUS Register 0020 (Hex.)		bit C: 0 bit D: 0	bit C: 1 bit D: 0	bit C: 1 bit D: 0	bit C: 0 bit D: 1

Safety Function Status Monitor

The drive Safety monitor output sends a feedback signal about the status of the Safety function. The Safety monitor output is one of the possible settings available for the MFDO terminals. If there is damage to the Safe Disable circuit, a controller (PLC or safety relay) must read this signal as an input signal to hold the “Safe Torque Off” status. This will help verify the condition of the safety circuit. Refer to the manual for the safety device for more information about the Safety function.

You can use the MFDO function settings to switch the polarity of the Safety monitor output signal. Refer to Table 5.24 for setting instructions.

Keypad Display

If the two input channels are OFF (Open), the keypad will flash *STo [Safe Torque OFF]*.

If there is damage to the Safe disable circuit or the drive, the keypad will flash *SToF [Safe Torque OFF Hardware]* when one input channel is OFF (Open) and the other is ON (Close the circuit). When you use the Safe disable circuit correctly, the keypad will not show *SToF*.

If there is damage to the drive, the keypad will show *SCF [Safety Circuit Fault]* when the drive detects a fault in the Safe disable circuit. Refer to the chapter on Troubleshooting for more information.

■ Validating the Safe Disable Function

After you replace parts or do maintenance on the drive, first complete all necessary wiring to start the drive, then test the Safe Disable input with these steps. Keep a record of the test results.

Note:

You should do this validation at least once every three months to guarantee the specification values of the safety parameters.

1. When the two input channels are OFF (Open), make sure that the keypad flashes *STo [Safe Torque OFF]*, and make sure that the motor is not running.
2. Monitor the ON/OFF status of the input channels and make sure that MFDO set to the EDM function operates as shown in Table 5.24.
   If one or more of these items are true, the ON/OFF status of the MFDO may not display correctly on the keypad:
   - Incorrect parameter settings.
   - A problem with an external device.
   - The external wiring has a short circuit or is disconnected.
   - There is damage to the device.

   Find the cause and repair the problem to correctly display the status.
3. Make sure that the EDM signal operates during usual operation as shown in Table 5.24.

5.7 No Motor Contactor Solution

You can use the safe disable circuit to install the drive in an elevator system with no motor contactor. Refer to Figure 5.26 for a wiring example.

EN 81-20 clause 5.9.2.5.4.d) allows a direct AC power supply to the motor when using an adjustable speed electrical power drive system with a safe torque off (STO) function according to EN 61800-5-2, 4.2.2.2 fulfilling SIL3 requirements, with a hardware fault tolerance of at least 1.

This product meets these requirements.

- The circuit must be designed so that the inputs H1 or H2 are opened and the drive output shuts off when the safety chain is interrupted.
- You must use safe disable inputs H1 and H2 to enable/disable the drive. You must set the input logic to Sourcing Mode. Refer to *Set Sinking Mode/Sourcing Mode on page 92* for more information.

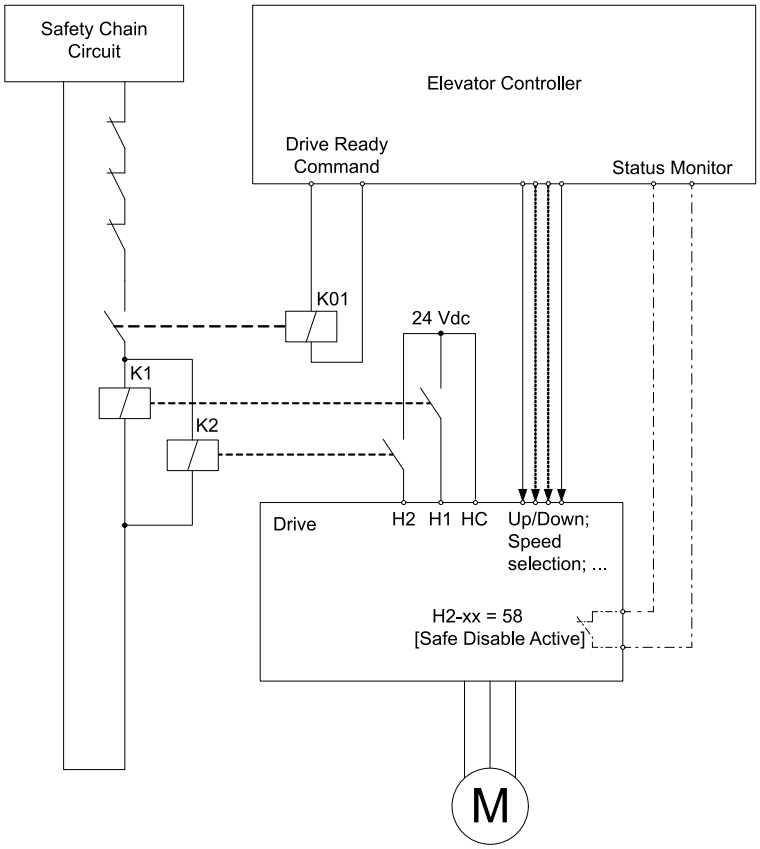

Figure 5.26 Wiring Example

Note:

1. The drive output will immediately shut off when input H1 or H2 is opened. In this case, the brake should apply immediately to prevent uncontrolled movement of the elevator.
2. Terminals H1 or H2 must be closed prior to setting the Up/Down command.
3. Set an MFDO terminal to *H2-xx = 58 [Safe Disable Active]*. This feedback signal can be implemented in the contactor supervision circuit of the controller that monitors a fault in the Safe Disable circuit.

6

Network Communications

6.1 Section Safety 264
6.2 Field Bus Network Support 265
6.3 MEMOBUS/Modbus Communications 266

6.1 Section Safety

⚠DANGER

Do not ignore the safety messages in this manual.

If you ignore the safety messages in this manual, it will cause serious injury or death. The manufacturer is not responsible for injuries or damage to equipment.

6.2 Field Bus Network Support

You can use the PLC to control and monitor the drive through the network. The drive has a standard RS-485 interface (MEMOBUS/Modbus communications). Install a separately sold communication option on the drive to support other network communications.

◆ Available Communication Options

Refer to Table 6.1 for the fieldbus networks that are compatible with the drive. Contact Yaskawa or your nearest sales representative to order a communication option.

Table 6.1 Available Fieldbus Network

Type of Communications	Option Model
CANopen	SI-S3

Note:

Only use the option card shown in Table 6.1.

6.3 MEMOBUS/Modbus Communications

This section gives detailed information about the parameters, error codes, and communication procedures for MEMOBUS/Modbus communications.

◆ Configure Master/Slave

You can use the MEMOBUS/Modbus protocol for serial communication with programmable controllers (PLC).

The MEMOBUS/Modbus communication uses one master (PLC) and a maximum of 31 slave drives. Serial communications usually starts with a signal from the master to the slave drives.

A slave drive that receives a command from the master does the specified function and then sends a response back to the master. You must set the address number for each slave drive before you start signal communications to make sure that the master uses the correct address numbers.

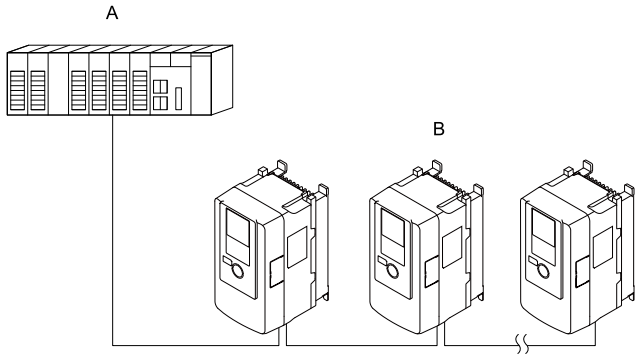

A - Master (PLC) **B - Slave (drive)**

Figure 6.1 PLC and Drive Connection Example

◆ Communication Specifications

Table 6.2 lists the specifications for the MEMOBUS/Modbus communications.

Table 6.2 MEMOBUS/Modbus Specifications

Item	Specification
Interface	RS-485
Synchronization method	Asynchronous (start-stop synchronization)
Communication parameter	Communications speed:1.2, 2.4, 4.8, 9.6, 19.2, 38.4, 57.6, 76.8, 115.2 kbps
	Data length: 8 bit (fixed)
	Parity: even, odd, none
	Stop bit: 1 bit (fixed)
Communication protocol	MEMOBUS/Modbus standard (RTU mode only)
Number of possible units to connect	Maximum: 31 units

◆ Communication with the PLC

This section gives information about the settings for the termination resistor and how to connect to MEMOBUS/Modbus communications. MEMOBUS/Modbus communications uses an RS-485 interface (2-wire).

■ Connect Communications Cable

Use this procedure to start communication between the PLC and drive.

1. De-energize the drive then connect the communications cable to the PLC and the drive. The drive uses terminal TB4 for MEMOBUS/Modbus communications.

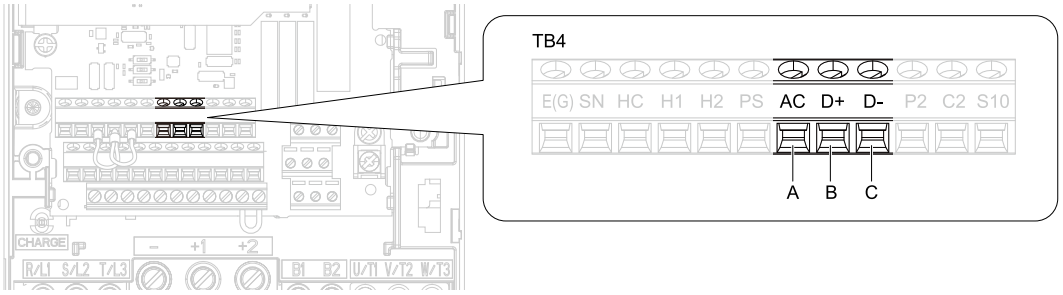

A - Terminal AC: Shield ground
B - Terminal D+: Communication input/output (+)
C - Terminal D-: Communication input/output (-)

Figure 6.2 Communications Cable Connection Terminal (TB4)

Note:
Isolate the communications wiring from the main circuit wiring and other high-power wiring Use shielded wires for the communications wiring and connect cable sheaths to the ground terminal of the drive. Incorrect wiring procedures could cause drive malfunction because of electrical interference.

2. Install the termination resistor on the network termination slave drive. Set DIP switch S2 to the ON position to enable the termination resistor on the drive.
3. Energize the drive.
4. Use the drive keypad to set the necessary communications parameters *H5-01 to H5-11*.
   - *H5-01 [Drive Node Address]*
   - *H5-02 [Communication Speed Selection]*
   - *H5-03 [Communication Parity Selection]*
   - *H5-04 [Communication Error Stop Method]*
   - *H5-05 [Comm Fault Detection Selection]*
   - *H5-06 [Drive Transmit Wait Time]*
   - *H5-09 [CE Detection Time]*
   - *H5-10 [Modbus Register 0025H Unit Sel]*
   - *H5-11 [Comm ENTER Command Mode]*
5. De-energize the drive and wait for the keypad display to turn off.
6. Energize the drive.

The drive is prepared to start communication with the PLC.

■ Set the Termination Resistor

You must enable the termination resistor on the slave terminal of the drive to use MEMOBUS/Modbus communications. Use DIP switch S2 on the terminal block to enable and disable the built-in termination resistor. Refer to Figure 6.3 for an example of how to set DIP switch S2. Use the tip of a tweezers or a jig with a tip width of 0.8 mm (0.03 in) to set the DIP switch. When you install the drive at the end of the communication line, set DIP switch S2 to ON. Set DIP switch S2 to OFF on all other drives.

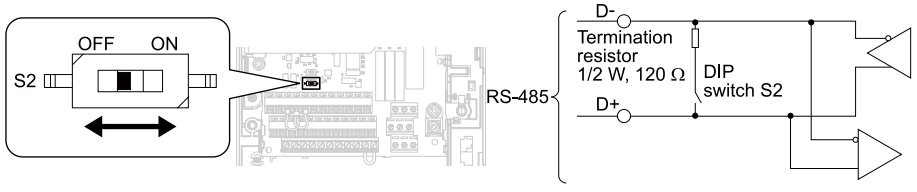

Figure 6.3 MEMOBUS/Modbus Communication Terminal and DIP Switch S2

◆ MEMOBUS/Modbus Drive Operations

When you use MEMOBUS/Modbus communications to operate the drive, drive parameters will specify the settings. This section gives information about the available functions and their related parameters.

■ Executable Functions

A PLC can do these operations with MEMOBUS/Modbus communications. Parameter settings (except *H5-xx*) do not have an effect on the availability of these operations.

- Monitor the drive status and operate the drive
- Set and view parameters
- Fault Reset
- Multi-function input setting (The input command from MEMOBUS/Modbus communications and MFDI terminals (S1 to S10) are linked by a logical OR operation.)

■ Drive Control

Select the external command that sets the speed references and motor run/stop with MEMOBUS/Modbus communications. Use the information in Table 6.3 to set the parameters as specified by the application.

Table 6.3 Necessary Parameter Settings for Drive Control from MEMOBUS/Modbus

Reference Source	No.	Name	Setting Value
External reference 1	b1-01	Speed Reference Selection 1	*2 [Memobus/Modbus Communications]*
	b1-02	Up/Down Command Selection 1	*2 [Memobus/Modbus Communications]*

For more information about operation mode selection, refer to *b1-01 [Speed Reference Selection 1]* and *b1-02 [Up/Down Command Selection 1]*.

◆ Communications Timing

To prevent overrun of the slave side, the master cannot send a message to the same drive for a selected length of time.

To prevent overrun of the master side, the slave cannot send a response message to the master for a selected length of time.

This section gives information about message timing.

■ Command Message from Master to Slave

To prevent data loss and overrun, after the master receives a message from the slave, the master cannot send the same type of command message to the same slave for a selected length of time. The minimum wait time is different for each type of message. Refer to Table 6.4 to find the minimum wait times.

Table 6.4 Minimum Wait Time to Send a Message

Command Type	Example	Minimum Wait Time
1	• Operation commands (Up/Down command, stop command) • I/O settings • Reading the motor and parameter setting values	5 ms *1
2	Writing a parameter	50 ms *1
3	Writing of modified data with the Enter command	3 to 5 s *1

*1 When the drive receives a message in the minimum wait time, it does command type 1 and sends a response message. If the drive receives command type 2 or command type 3 messages in the minimum wait time, it will trigger a communications error or the drive will ignore the command.

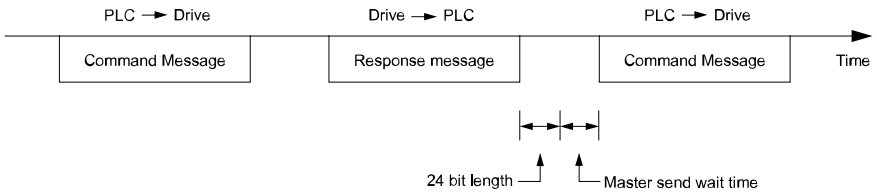

Figure 6.4 Minimum Wait Time to Send a Message

You must set the timer in the master to measure the length of time for the slave to respond to the master. If you set the timer, but the slave does not send a response message in a specified length of time, the master will send the message again.

■ Response Message from Slave

The slave receives the command message from the master, and then processes the data it received. The slave then waits for the time set in *H5-06 [Drive Transmit Wait Time]*, and sends a response message to the master. If overrun occurs on the master, increase the wait time set in *H5-06*.

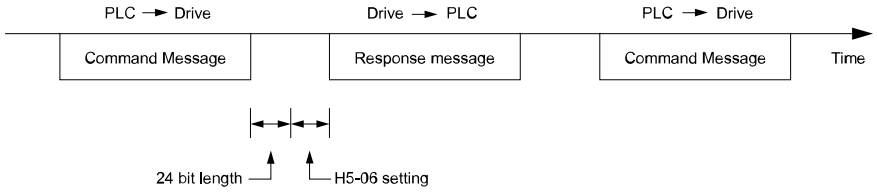

Figure 6.5 Response Wait Time

◆ Message Format

■ Communication Message Description

In MEMOBUS/Modbus communications, the master sends commands to the slave, then the slave responds. The master and slave use the format shown in Figure 6.6 to send messages. The data length changes when the command type (function) changes.

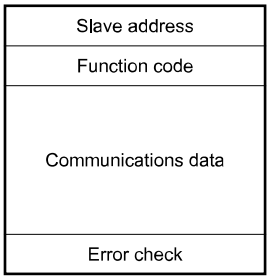

Figure 6.6 Message Format

■ Slave Address

Set the slave address of the drive to 00 to FF (Hex.). When the slave address is 00 (Hex.), the master sends the command and all slaves receive the command (broadcast functionality).

If you set address 00 (Hex.) to the slave, it will not send a response message to the master (broadcast address).

■ Function Code

There are five function codes that set commands. Table 6.5 shows the different codes.

Table 6.5 Function Codes

Function Code (Hex.)	Subfunction Code (Hex.)	Function	Command Message		Response Message	
			Minimum Data Length (byte)	Maximum Data Length (byte)	Minimum Data Length (byte)	Maximum Data Length (byte)
03	-	Read Multiple Holding Registers	8	8	7	37
08	-	Loopback Test	8	8	8	8
10	-	Writing to Multiple Holding Registers	11	41	8	8
5A	-	Writing to Multiple Holding Registers/ Reading the Register Indicated	11	41	17	17
67	010D	Reading the Contents of Non-Consecutive Holding Registers	10	248	10	248
	010E	Writing to Non-Consecutive Holding Registers	14	250	8	8

■ Communications Data

Communications data is a series of data that uses the combination of the communications register number and the data for these registers. The data length changes when function codes shown in Table 6.5 change. For a loopback test, it switches to test code.

The communications register for the drive has a 2-byte length. Data that is written to the register for the drive is usually 2 bytes. Register data that is read from the drive is also 2 bytes.

■ Error Check

Error check uses the CRC-16 method to detect transmission errors. Use the procedure in this section to calculate CRC-16.

Command Data

When the drive receives data, it will make sure that there are no errors in the data. The drive uses the procedure below to calculate CRC-16, then the drive compares that data with the CRC-16 value in the message. If the CRC-16 values do not agree, the drive will not execute a command message.

When you calculate CRC-16 in MEMOBUS/Modbus communications, make sure that you set the start value as FFFF (Hex.). All 16 bits must be 1.

Use this procedure to calculate CRC-16:

1. Make sure that the start value is FFFF (Hex.).
2. Calculate the FFFF (Hex.) start value and the XOR of the slave address (exclusive OR).
3. Move the step 2 results one column to the right. Do this shift until the carry bit is 1.
4. When the carry bit is 1, calculate XOR via the result from the above step 3 and A001 (Hex.).
5. Do steps 3 and 4 until the 8th shift to the right.
6. Use the result of step 5 to calculate the XOR and the data of the following messages (function code, register address, data). Do steps 3 to 5 until the last data, then calculate.
7. The result of the last right shift or the value of the last XOR calculation is the result for CRC-16.

Table 6.6 lists examples of the CRC-16 calculation of slave address 02 (Hex.) and function code 03 (Hex.). The calculated results of CRC-16 for this section is D140 (Hex.).

Note:

The calculation example only gives information about some error checks with CRC-16. The drive will do the same error checks for the next data.

Table 6.6 CRC-16 Calculation Example

Description	Calculation	Overflow	Description	Calculation	Overflow
Initial value (FFFF (Hex.))	1111 1111 1111 1111	-	Function code 03 (Hex.)	0000 0011	-
Address 02 (Hex.)	0000 0010	-	XOR w result	1000 0001 0011 1101	-
XOR w initial value	1111 1111 1111 1101		Shift 1	0100 0000 1001 1110	1
Shift 1	0111 1111 1111 1110	1	XOR w A001 (Hex.)	1010 0000 0000 0001	-
XOR w A001 (Hex.)	1010 0000 0000 0001	-	XOR result	1110 0000 1001 1111	-
XOR result	1101 1111 1111 1111	-	Shift 2	0111 0000 0100 1111	1
Shift 2	0110 1111 1111 1111	1	XOR w A001 (Hex.)	1010 0000 0000 0001	-
XOR w A001 (Hex.)	1010 0000 0000 0001	-	XOR result	1101 0000 0100 1110	-
XOR result	1100 1111 1111 1110	-	Shift 3	0110 1000 0010 0111	0
Shift 3	0110 0111 1111 1111	0	Shift 4	0011 0100 0001 0011	1
Shift 4	0011 0011 1111 1111	1	XOR w A001 (Hex.)	1010 0000 0000 0001	-
XOR w A001 (Hex.)	1010 0000 0000 0001	-	XOR result	1001 0100 0001 0010	-
XOR result	1001 0011 1111 1110	-	Shift 5	0100 1010 0000 1001	0
Shift 5	0100 1001 1111 1111	0	Shift 6	0010 0101 0000 0100	1
Shift 6	0010 0100 1111 1111	1	XOR w A001 (Hex.)	1010 0000 0000 0001	-
XOR w A001 (Hex.)	1010 0000 0000 0001	-	XOR result	1000 0101 0000 0101	-
XOR result	1000 0100 1111 1110	-	Shift 7	0100 0010 1000 0010	1
Shift 7	0100 0010 0111 1111	0	XOR w A001 (Hex.)	1010 0000 0000 0001	-
Shift 8	0010 0001 0011 1111	1	XOR result	1110 0010 1000 0011	-

Description	Calculation	Overflow	Description	Calculation	Overflow
XOR w A001 (Hex.)	1010 0000 0000 0001	-	Shift 8	0111 0001 0100 0001	1
XOR result	1000 0001 0011 1110	-	XOR w A001 (Hex.)	1010 0000 0000 0001	-
Perform operations with next data (function code)			XOR result	1101 0001 0100 0000	-
			CRC-16	1101 0001 0100 0000	-
				D 1 4 0 (Lower) (Upper)	-
			Continue from here with next data.		

Response Data

The drive does the CRC-16 calculation for the response message and makes sure that the data does not have errors. Make sure that the calculated value is the same value as the CRC-16 in the response message.

◆ Examples of Messages for Commands/Responses

The items in this section are examples of messages for commands/responses.

■ Read Multiple Holding Registers

Uses function code 03 (Hex.) to read the contents of a maximum of 16 holding registers.

Table 6.7 shows example messages when the drive reads the status signal of slave drive 2, the error contents, fault contents, and speed references.

Table 6.7 Message Example When Reading the Contents of Holding Register

Byte	Command Message		Setting Data (Hex.)	Response Message (Normal)		Setting Data (Hex.)	Response Message (Fault)		Setting Data (Hex.)
0	Slave address		02	Slave address		02	Slave address		02
1	Function code		03	Function code		03	Function code		83
2	Starting No.	Upper	00	Data Quantity		08	Error code		03
3		Lower	20	First storage register	Upper	00	CRC-16	Upper	F1
4	Data Quantity	Upper	00		Lower	65		Lower	31
5		Lower	04	Next storage register	Upper	00	-		
6	CRC-16	Upper	45		Lower	00	-		
7		Lower	F0	Next storage register	Upper	00	-		
8	-				Lower	00	-		
9	-			Next storage register	Upper	01	-		
10	-				Lower	F4	-		
11	-			CRC-16	Upper	AF	-		
12	-				Lower	82	-		

■ Loopback Test

The loopback test uses function code 08 (Hex.) and returns the command message as a response message. This test checks communication between the master and slave. The test code and data can use desired values.

Table 6.8 shows examples of messages given out when the loopback test is done with the slave drive with address 1.

Table 6.8 Message Examples from the Loopback Test

Byte	Command Message		Setting Data (Hex.)	Response Message (Normal)		Setting Data (Hex.)
0	Slave address		01	Slave address		01
1	Function code		08	Function code		08
2	Test code	Upper	00	Test code	Upper	00
3		Lower	00		Lower	00
4	Data	Upper	A5	Data	Upper	A5
5		Lower	37		Lower	37

Byte	Command Message		Setting Data (Hex.)	Response Message (Normal)		Setting Data (Hex.)
6	CRC-16	Upper	DA	CRC-16	Upper	DA
7		Lower	8D		Lower	8D

■ Writing to Multiple Holding Registers

You can write the data that you set to the number of holding registers set in function code 10 (Hex.). You must configure the number of the holding registers and each 8 higher bits and 8 lower bits in order in the command message for the write data. You can write to a maximum of 16 holding registers.

Table 6.9 shows example messages when you use the PLC to set Forward run (Up command) in slave drive 1 with a 60.00 Hz speed reference.

When you rewrite the parameter value with the write command through the *H5-11 [Comm ENTER Command Mode]* setting, you must use the Enter command to save and enable the contents of the changes. Refer to *H5-11: Comm ENTER Command Mode on page 629* and *Enter Command on page 275* for more information.

Table 6.9 Message Example When Writing to Multiple Holding Registers

Byte	Command Message		Setting Data (Hex.)	Response Message (Normal)		Setting Data (Hex.)	Response Message (Fault)		Setting Data (Hex.)
0	Slave address		01	Slave address		01	Slave address		01
1	Function code		10	Function code		10	Function code		90
2	Starting No.	Upper	00	Starting No.	Upper	00	Error code		02
3		Lower	01		Lower	01	CRC-16	Upper	CD
4	Data Quantity	Upper	00	Data Quantity	Upper	00		Lower	C1
5		Lower	02		Lower	02	-		
6	Byte No.		04	CRC-16	Upper	10	-		
7	First data	Upper	00		Lower	08	-		
8		Lower	01	-			-		
9	Next data	Upper	17	-			-		
10		Lower	70	-			-		
11	CRC-16	Upper	6D	-			-		
12		Lower	B7	-			-		

Note:

The number of bytes set in the command message (Byte No.) correspond to the Data Quantity value × 2. The response message uses the same formula.

■ Writing to More than One Holding Register/Reading the Indicated Register

The drive uses function code 5A (Hex.) to write to more than one register, then it reads the contents of four holding registers at the same time.

The function for writing to more than one register is the same as the function for function code 10 (Hex.). You can write to a maximum of 16 holding registers.

The four holding registers to be read from are specified in *H5-25 to H5-28 [Function 5A Register x Selection]*.

Table 6.10 shows example messages when you write to more than one holding register or when you read more than one command register. Table 6.10 uses this register data for the examples:

- The drive for slave 1 is set for Forward run (Up command) with a speed reference of 60.00 Hz.
- The setting in *H5-25* to *H5-28* and the data in the specified holding registers are as follows:
  - *H5-25* = 0044H: *U1-05 [Speed Feedback]* = 60.00 Hz (6000 = 1770H)
  - *H5-26* = 0045H: *U1-06 [Output Voltage Ref]* = 200.0 V (2000 = 07D0H)
  - *H5-27* = 0042H: *U1-03 [Output Current]* = 50% of continuous rated output current of the drive (100% = 8192, 50% = 4096 = 1000H)
  - *H5-28* = 0049H: *U1-10 [Input Terminal Status]* = 00H

When you rewrite the parameter value with the write command through the *H5-11 [Comm ENTER Command Mode]* setting, you must use the Enter command to save and enable the contents of the changes. Refer to *H5-11: Comm ENTER Command Mode on page 629* and *Enter Command on page 275* for more information.

Table 6.10 Message Example When Writing to More than One Holding Register/Reading the Indicated Register

Byte	Command Message		Setting Data (Hex.)	Response Message (Normal)		Setting Data (Hex.)	Response Message (Fault)		Setting Data (Hex.)
0	Slave address		01	Slave address		01	Slave address		01
1	Function code		5A	Function code		5A	Function code		DA
2	Starting No.	Upper	00	Register status		0F	Register status		0F
3		Lower	01	Data in holding register 1 selected with *H5-25*	Upper	17	Data in holding register 1 selected with *H5-25*	Upper	17
4	Data Quantity	Upper	00		Lower	70		Lower	70
5		Lower	02	Data in holding register 2 selected with *H5-26*	Upper	07	Data in holding register 2 selected with *H5-26*	Upper	07
6	Byte No.		04		Lower	D0		Lower	D0
7	First data	Upper	00	Data in holding register 3 selected with *H5-27*	Upper	10	Data in holding register 3 selected with *H5-27*	Upper	10
8		Lower	01		Lower	00		Lower	00
9	Next data	Upper	17	Data in holding register 4 selected with *H5-28*	Upper	00	Data in holding register 4 selected with *H5-28*	Upper	00
10		Lower	70		Lower	00		Lower	00
11	CRC-16	Upper	4F	Starting No.	Upper	00	Error code		02
12		Lower	43		Lower	01	CRC-16	Upper	E9
13	-			Data Quantity	Upper	00		Lower	6C
14	-				Lower	02	-		
15	-			CRC-16	Upper	AC	-		
16	-				Lower	D0	-		

Note:
The number of bytes set in the command message (Byte No.) correspond to the Data Quantity value × 2.

Register Status	
bit 0	Data in register 1 selected with *H5-25* 1: Successfully read the register 0: Register read error
bit 1	Data in register 2 selected with *H5-26* 1: Successfully read the register 0: Register read error
bit 2	Data in register 3 selected with *H5-27* 1: Successfully read the register 0: Register read error
bit 3	Data in register 4 selected with *H5-28* 1: Successfully read the register 0: Register read error
bit 4	Not used
bit 5	Not used
bit 6	Not used
bit 7	Not used

■ Reading the Contents of Non-Consecutive Holding Registers

The drive uses function code 67 (Hex.) and subfunction code 010D (Hex.) to read data with a maximum of 120 holding registers.

You must give the holding register number from which to read separately.

Table 6.11 shows example messages when you read the speed reference and torque limit from the drive for slave 1. Table 6.11 uses these specified holding registers data for the examples.

- 0024H: *U1-01 [Speed Reference]* = 60.00 Hz (6000 = 1770H)
- 0028H: *U1-09 [Torque Reference]* = 100.0% (1000 = 03E8H)

Table 6.11 Message Example When Reading the Contents of Non-Consecutive Holding Registers

Byte	Command Message		Setting Data (Hex.)	Response Message (Normal)		Setting Data (Hex.)	Response Message (Fault)		Setting Data (Hex.)
0	Slave address		01	Slave address		01	Slave address		01
1	Function code		67	Function code		67	Function code		E7
2	Subfunction Code	Upper	01	Subfunction Code	Upper	01	Error code		02
3		Lower	0D		Lower	0D	CRC-16	Upper	EA
4	Data Quantity	Upper	00	Byte No.	Upper	00		Lower	31
5		Lower	02		Lower	04	-		
6	Holding register 1 No.	Upper	00	Holding register 1 data	Upper	17	-		
7		Lower	24		Lower	70	-		
8	Holding register 2 No.	Upper	00	Holding register 2 data	Upper	03	-		
9		Lower	28		Lower	E8	-		
10	CRC-16	Upper	8B	CRC-16	Upper	47	-		
11		Lower	29		Lower	ED	-		

Note:

The number of bytes set in the command message (Byte No.) correspond to the Data Quantity value × 2.

■ Writing to Non-Consecutive Holding Registers

The drive uses function code 67 (Hex.) and subfunction code 010E (Hex.) to write data with a maximum of 60 holding registers.

For each holding register that you write to the drive, you must include the address of that holding register.

Table 6.12 shows example messages when you write the speed reference and torque limit to slave 1 drive. Table 6.12 uses these specified holding registers data for the examples.

- 0002H: Speed Reference = 60.00 Hz (6000 = 1770H)
- 0004H: Torque Limit = 150.0% (1500 = 05DCH)

When you rewrite the parameter value with the write command through the *H5-11 [Comm ENTER Command Mode]* setting, you must use the Enter command to save and enable the contents of the changes. Refer to *H5-11: Comm ENTER Command Mode on page 629* and *Enter Command on page 275* for more information.

Table 6.12 Message Example When Writing to Non-Consecutive Holding Registers

Byte	Command Message		Setting Data (Hex.)	Response Message (Normal)		Setting Data (Hex.)	Response Message (Fault)		Setting Data (Hex.)
0	Slave address		01	Slave address		01	Slave address		01
1	Function code		67	Function code		67	Function code		E7
2	Subfunction Code	Upper	01	Subfunction Code	Upper	01	Error code		02
3		Lower	0E		Lower	0E	CRC-16	Upper	EA
4	Data Quantity	Upper	00	Data Quantity	Upper	00		Lower	31
5		Lower	02		Lower	02	-		
6	Byte No.	Upper	00	CRC-16	Upper	D5	-		
7		Lower	04		Lower	FC	-		
8	Holding register 1 No.	Upper	00	-			-		
9		Lower	02	-			-		
10	Holding register 1 data	Upper	17	-			-		
11		Lower	70	-			-		
12	Holding register 2 No.	Upper	00	-			-		
13		Lower	04	-			-		
14	Holding register 2 data	Upper	05	-			-		
15		Lower	DC	-			-		
16	CRC-16	Upper	55	-			-		
17		Lower	59	-			-		

Note:
The number of bytes set in the command message (Byte No.) correspond to the Data Quantity value × 2.

◆ Enter Command

When you use MEMOBUS/Modbus communications to write parameters from the PLC to the drive, *H5-11 [Comm ENTER Command Mode]* lets you use the Enter command to enable these parameters. This section gives information about the Enter command.

■ Types of Enter Commands

The drive supports the two Enter commands shown in Table 6.13.

Write 0 to register number 0900 or 0910 (Hex.) to enable the Enter command. You can only write to these registers. If you read these registers, it will cause an error.

Table 6.13 Types of Enter Commands

Register No. (Hex.)	Description
0900	When you write parameter data to the EEPROM, you will enable the data on the RAM at the same time. This process saves the parameter changes even if you de-energize the drive.
0910	This updates the data on the RAM, but does not write data to the EEPROM. If you de-energize the drive, you will lose the parameter changes.

Note:
- You can write to the drive EEPROM a maximum of 100,000 times. Do not frequently execute the Enter command (0900 (Hex.)) that is written to EEPROM.
- The Enter command register is write-only. If this register is read, it will cause a Register Number Error (02 (Hex.)).
- When command data or broadcast messages are transmitted to the drive, the Enter command is not necessary.

◆ Self-Diagnostics

The drive can use Self-Diagnostics to confirm correct operation of the hardware in the serial communications interface circuit. Self-Diagnostics connects the transmission terminal to the reception terminal on the control circuit. It then transmits the data sent by the drive and makes sure that the drive can communicate correctly.

Use this procedure to do Self-Diagnostics:

1. Energize the drive.
2. Set *H1-06 = 67 [Terminal S6 Function Selection = Communications Test Mode]*.
3. De-energize the drive.
4. Connect a jumper between control circuit terminals S6 and SN.
   Make sure terminal SC and terminal SP are connected by a wire jumper.

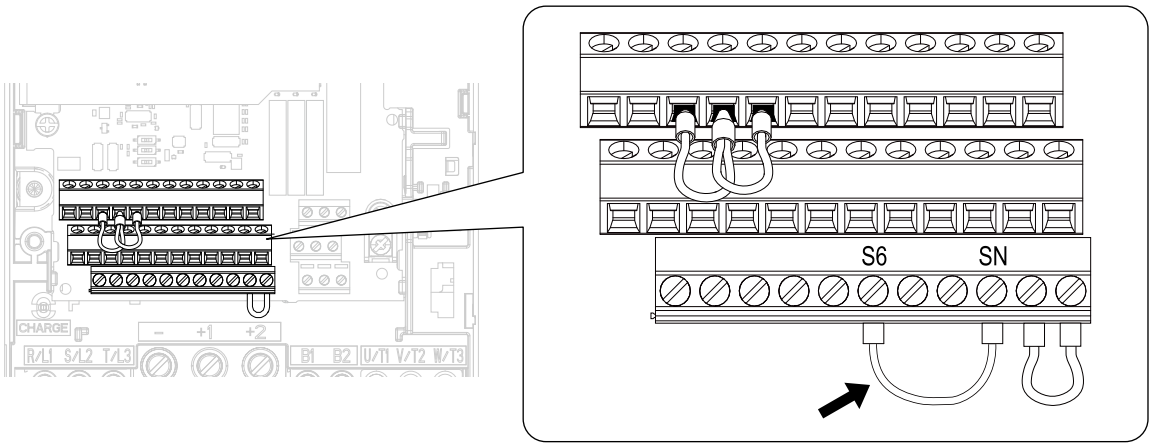

Figure 6.7 Self-Diagnostics Jumper Terminals

5. Energize the drive.
6. When normal, the keypad will show *PASS [Modbus Communication Test]*.
   When there is an error, the keypad will show *CE [Modbus Communication Error]*.
7. De-energize the drive.

8. Disconnect the wire jumper between terminals S6 and SN. Set terminal S6 to its initial function.

Self-Diagnostics is complete and the drive returns to its usual function.

◆ Communications Data Table

Command Data on page 276, *Monitor Data on page 279*, and *Broadcast Messages on page 291* show the communications data. The data types are command data, monitor data, and broadcast message.

Refer to the Parameter List for parameter communications registers.

■ Command Data

You can read and write command data.

Note:

Set the reserved bit to 0. Do not write the data in the reserved register or the monitor register.

Table 6.14 MEMOBUS/Modbus Communications Command Data

Register No. (Hex.)	Description	
0000	Reserved	
0001	Up/Down command, multi-function input command	
	bit 0	Up command/Stop 1: Up command, 0: Stop
	bit 1	Down command/Stop 1: Down command, 0: Stop
	bit 2	External Fault 1: *EF0 [Option Card External Fault]*
	bit 3	Fault Reset 1: Reset command
	bit 4	Multi-function input 1 When *H1-01 = 40 [Up Command]*, the multi-function input command is "ComRef." **Note:** When you switch the bit ON as ComRef, the speed reference source changes to MEMOBUS/Modbus communications. When you connect a communication option to the drive, the speed reference source gives priority to the communications option.
	bit 5	Multi-function input 2 When the multi-function input command is *H1-02 = 41 [Down Command]*, bit 5 is "ComCtrl." **Note:** When you switch the bit ON as ComCtrl, the Up/Down command source changes to MEMOBUS/Modbus communications. When you connect a communication option to the drive, the Up/Down command source gives priority to the communications option.
	bit 6	Multi-function input 3
	bit 7	Multi-function input 4
	bit 8	Multi-function input 5
	bit 9	Multi-function input 6
	bit A	Multi-function input 7
	bit B	Multi-function input 8
	bit C	Multi-function input 9
	bit D	Multi-function input 10
	bit E - F	Reserved
0002	Speed Reference	*o1-03 [Speed Display Unit Selection]* (unsigned) sets the units.
0003	Output voltage gain	Units: 0.1% Setting range: 20 (2.0%) to 2000 (200.0%), the default value at energize: 1000 (100.0%)
0004	Torque reference/torque limit (0.1% signed)	
0005	Torque compensation (0.1% signed)	
0006	Reserved	
0007	Setting for the multi-function analog monitor output terminal 1 (10 V/4000 H)	
0008	Setting for the multi-function analog monitor output terminal 2 (10 V/4000 H)	

Register No. (Hex.)	Description	
0009	MFDO setting	
	bit 0	MFDO (terminal M1-M2) 1: ON, 0: OFF
	bit 1	MFDO (terminal M3-M4) 1: ON, 0: OFF
	bit 2	MFDO (terminal M5-M6) 1: ON, 0: OFF
	bit 3	Multi-function photocoupler output 1 (terminal P1-C1) 1: ON, 0: OFF
	bit 4	Multi-function photocoupler output 2 (terminal P2-C2) 1: ON, 0: OFF
	bit 5	Reserved
	bit 6	1: bit 7 function is enabled
	bit 7	Fault relay output (terminal MA/MB-MC) 1: ON, 0: OFF
	bit 8 - F	Reserved
000A - 000E	Reserved	
000F	Command selection setting	
	bit 0 - 1	Reserved
	bit 2	Torque reference/torque limit input 1: Enables setting values from MEMOBUS/Modbus
	bit 3	Torque Compensation Input 1: Enables setting values from MEMOBUS/Modbus
	bit 4 - B	Reserved
	bit C	Terminal S5 input of broadcast message 1: Enabled, 0: Disabled
	bit D	Terminal S6 input of broadcast message 1: Enabled, 0: Disabled
	bit E	Terminal S7 input of broadcast message 1: Enabled, 0: Disabled
	bit F	Terminal S8 input of broadcast message 1: Enabled, 0: Disabled
0010 - 001A	Reserved	
001B	Analog monitor option AO-A3 analog output 1 value (10 V/4000 (Hex.))	
001C	Analog monitor option AO-A3 analog output 2 value (10 V/4000 (Hex.))	
001D	Digital output option DO-A3 output value (binary)	
001E - 001F	Reserved	
15C0	Reserved	

Register No. (Hex.)	Description	
15DF	bit 0	Reserved
	bit 1	Baseblock command 1: Enables baseblock command • This is the same function as *H1-xx = 8 [Baseblock Command (N.O.)]*. It operates as specified by the command and OR operation from the MFDI terminals.
	bit 2	Baseblock command - Without message 1: Enables baseblock command • This is the same function as *H1-xx = 8 [Baseblock Command (N.O.)]*. • The keypad does not show the *bb [Baseblock]* alarm message. The ALM LED does not flash.
	bit 3	Coast-to-stop command 1: Enables coast-to-stop command • The drive shuts off the output and the motor coasts to stop at the leading edge of bit 3. • To restart the drive, set bit 3 to 0 and enter the Up/Down command again.
	bit 4	Ramp to stop command 1: Enables ramp to stop command • The drive ramps to stop in the selected deceleration time at the leading edge of bit 4. • To restart the drive, set bit 4 to 0 and enter the Up/Down command again.
	bit 5	Emergency stop command 1: Enables Emergency stop command • This is the same function as *H1-xx = 15 [Emergency Stop (N.O.)]*. It operates as specified by the command and OR operation from the MFDI terminals.
	bit 6	Soft start input reset 1: Enables soft start input reset • When bit 6 is 1, the input to the soft starter will be 0. The drive decelerates the motor in the selected deceleration time. When bit 6 is 0, the motor accelerates to the previous speed reference. • *U1-01 [Speed Reference]* shows the set speed reference.
	bit 7	Soft start output reset 1: Enables soft start output reset • When bit 7 is 1, the output from the soft starter will be 0. • When *A1-02 = 3, 7 [Control Method Selection = CLV or CLV/PM]*, the drive decelerates the motor as specified by the torque limit. When *A1-02 ≠ 3, 7* the drive shuts off the output and the motor coasts. • When bit 6 is 0, the motor accelerates to the previous speed reference.
	bit 8 - F	Reserved
15E0	Reserved	
3004	Time Setting Setting range: 0000 to 2359 (decimal), the default value at energize: 0000 Set the hour and the minute in HHMM format. • HH: 00 to 23 (decimal) • MM: 00 to 59 (decimal)	
3005	Year and Day Setting Setting range: 1600 to 9906 (decimal), the default value at energize: 1600 Sets the year and the day of the week in YYDW format. • YY: the last two digits of the year from 16 to 99 (decimal) • DW: the day of the week – Sunday: 00 – Monday: 01 – Tuesday: 02 – Wednesday: 03 – Thursday: 04 – Friday: 05 – Saturday: 06	
3006	Date Setting Setting range: 101 to 1231 (decimal), the default value at energize: 101 Sets the month and the date in MMDD format. • MM: 01 to 12 (decimal) • DD: 01 to 31 (decimal)	
3007	Set the Date Information Setting range: 0 to 8 (decimal), the default value at energize: 8 Sets the values specified in 3004H to 3006H as the date and time. • Command Data: 1 • Response Data: 0 (normal), 8 (fault)	

■ Monitor Data

You can only read monitor data.

Table 6.15 Monitor Data for MEMOBUS/Modbus Communication

Register No. (Hex.)	Description	
0020	Drive Status 1	
	bit 0	During Run 1: During run, 0: During stop
	bit 1	During Reverse 1: During reverse, 0: Forward run
	bit 2	Drive ready 1: Ready, 0: Not ready
	bit 3	Fault 1: Fault
	bit 4	Data Setting Error 1: oPExx error
	bit 5	MFDO (terminal M1-M2) 1: ON, 0: OFF
	bit 6	MFDO (terminal M3-M4) 1: ON, 0: OFF
	bit 7	MFDO (terminal M5-M6) 1: ON, 0: OFF
	bit 8	Multi-function photocoupler output 1 (terminal P1-C1) 1: ON, 0: OFF
	bit 9	Multi-function photocoupler output 2 (terminal P2-C2) 1: ON, 0: OFF
	bit A - B	Reserved
	bit C	SToF [Safe Torque OFF Hardware] 1: One of Safe Disable input 1 (terminal H1-HC) and Safe Disable input 2 (terminal H2-HC) is OFF (open) and the other is ON (closed)
	bit D	STo [Safe Torque OFF] 1: Both Safe Disable input 1 (terminal H1-HC) and Safe Disable input 2 (terminal H2-HC) are OFF (open)
	bit E	ComRef status 1: Enabled
	bit F	ComCtrl status 1: Enabled
0021	Fault Description 1	
	bit 0	oC [Overcurrent], GF [Ground Fault]
	bit 1	ov [Overvoltage]
	bit 2	oL2 [Drive Overload]
	bit 3	oH1 [Heatsink Overheat]
	bit 4	rr [Dynamic Braking Transistor Fault]
	bit 5 - 6	Reserved
	bit 7	EF0 [Option Card External Fault], EF3 to EF10 [External Fault]
	bit 8	CPFxx [Hardware Fault] **Note:** Includes *oFx*.
	bit 9	oL1 [Motor Overload], oL3, oL4 [Overtorque Detection 1/2], UL3, UL4 [Undertorque Detection 1/2]
	bit A	PGo [Encoder (PG) Feedback Loss], PGoH [Encoder (PG) Hardware Fault], oS [Overspeed], dEv [Speed Deviation]
	bit B	During Uv [Undervoltage] detection
	bit C	Uv1 [DC Bus Undervoltage], Uv2 [Control Power Undervoltage], Uv3 [Soft Charge Answerback Fault]
	bit D	LF [Output Phase Loss], PF [Input Phase Loss]
	bit E	CE [Modbus Communication Error], bUS [Option Communication Error]
	bit F	oPr [Keypad Connection Fault]

Register No. (Hex.)	Description	
0022	Fault Contents	
	bit 0	1: During data writing, during motor switching
	bit 1 - 2	Reserved
	bit 3	1: Upper/Lower Limit Fault
	bit 4	1: Data Integrity Fault
	bit 5	1: During EEPROM writing
	bit 6 - F	Reserved
0023	U1-01 [Speed Reference] **Note:** *o1-03 [Speed Display Unit Selection]* sets the units.	
0024	U1-02 [Output Speed] **Note:** *o1-03 [Speed Display Unit Selection]* sets the units.	
0025	U1-06 [Output Voltage Ref] (units: 0.1 V) **Note:** Use *H5-10 [Modbus Register 0025H Unit Sel]* to change the setting unit.	
0026	U1-03 [Output Current] (units: 0.1 A)	
0027	U1-08 [Output Power]	
0028	U1-09 [Torque Reference]	
0029	Fault Description 2	
	bit 0	Reserved
	bit 1	GF [Ground Fault]
	bit 2	PF [Input Phase Loss]
	bit 3	LF [Output Phase Loss]
	bit 4 - 5	Reserved
	bit 6	oH4 [Motor Overheat Fault (PTC Input)]
	bit 7 - F	Reserved
002A	Minor Fault Description 1	
	bit 0 - 1	Reserved
	bit 2	EF [Up/Down Command Input Error]
	bit 3	bb [Baseblock]
	bit 4	oL3 [Overtorque 1]
	bit 5	oH [Heatsink Overheat]
	bit 6	ov [DC Bus Overvoltage]
	bit 7	Uv [Undervoltage]
	bit 8	FAn [Internal Fan Fault]
	bit 9	CE [Modbus Communication Error]
	bit A	bUS [Option Communication Error]
	bit B	UL3/UL4 [Undertorque Detection 1/2]
	bit C	oH3 [Motor Overheat (PTC Input)]
	bit D - E	Reserved
	bit F	CALL [Serial Comm Transmission Error]

Register No. (Hex.)	Description	
002B	U1-10 [Input Terminal Status]	
	bit 0	1: Control circuit terminal S1 ON
	bit 1	1: Control circuit terminal S2 ON
	bit 2	1: Control circuit terminal S3 ON
	bit 3	1: Control circuit terminal S4 ON
	bit 4	1: Control circuit terminal S5 ON
	bit 5	1: Control circuit terminal S6 ON
	bit 6	1: Control circuit terminal S7 ON
	bit 7	1: Control circuit terminal S8 ON
	bit 8	1: Control circuit terminal S9 ON
	bit 9	1: Control circuit terminal S10 ON
	bit A - F	Reserved
002C	Drive Status 2	
	bit 0	During Run 1: During Run
	bit 1	During zero speed 1: During zero speed
	bit 2	Speed agreement 1: During agreement
	bit 3	User-defined speed agreement 1: During agreement
	bit 4	Speed Detection 1 1: Output speed ≤ L4-01
	bit 5	Speed Detection 2 1: Output speed ≥ L4-01
	bit 6	Drive ready 1: Run ready
	bit 7	During low voltage detection 1: During detection
	bit 8	During Baseblock 1: Drive output during baseblock
	bit 9	Speed reference mode 1: No communication option, 0: Communication option
	bit A	Up/Down command mode 1: No communication option, 0: Communication option
	bit B	During overtorque/undertorque 1, 2 detection
	bit C	Speed reference loss 1: Loss
	bit D	Executing Automatic Fault Reset 1: Reset Enabled
	bit E	Fault 1: During fault detection
	bit F	MEMOBUS/Modbus communications timeout 1: At Timeout

Register No. (Hex.)	Description	
002D	U1-11 [Output Terminal Status]	
	bit 0	MFDO (terminal M1-M2) 1: ON, 0: OFF
	bit 1	MFDO (terminal M3-M4) 1: ON, 0: OFF
	bit 2	MFDO (terminal M5-M6) 1: ON, 0: OFF
	bit 3	MFDO (terminal P1-C1) 1: ON, 0: OFF
	bit 4	MFDO (terminal P2-C2) 1: ON, 0: OFF
	bit 5 - 6	Reserved
	bit 7	Fault relay output (terminal MA/MB-MC) 1: ON, 0: OFF
	bit 8 - F	Reserved
002E - 0030	Reserved	
0031	U1-07 [DC Bus Voltage] (unit: 1 V)	
0032	U1-09 [Torque Reference] (unit: 1%)	
0033	Reserved	
0034	Product code 1 [ASCII], product type (ES700 = 0E)	
0035	Product code 2 [ASCII], specification (ES700 = 70)	
0036 - 003C	Reserved	
003D	Communications error description **Note:** The drive saves the description of the communications error until you reset the fault.	
	bit 0	CRC Error
	bit 1	Data Length Error
	bit 2	Reserved
	bit 3	Parity Error
	bit 4	Overrun Error
	bit 5	Framing Error
	bit 6	Timeout
	bit 7 - F	Reserved
003E	Output speed	Units: min^{-1} or r/min **Note:** Set *E2-04, E4-04, E5-04 [Motor Pole Count]*.
003F		0.01% units
0040 - 004A	Used with *U1-xx [Operation Status Monitors]*. Refer to the *U Monitor* for parameter details.	

Register No. (Hex.)	Description	
004B	U1-12 [Drive Status]	
	bit 0	1: During Run
	bit 1	1: During zero speed
	bit 2	1: During reverse
	bit 3	1: During reset signal input
	bit 4	1: During speed agreement
	bit 5	1: Drive operation ready
	bit 6	1: Minor Fault
	bit 7	1: Fault
	bit 8	1: During oPExx [Operation Error] detection
	bit 9	1: Recovery from momentary power loss, 0: Power recovery
	bit A	1: Motor 2 Selection
	bit B	Reserved
	bit E	ComRef status/NetRef status
	bit F	ComCtrl status/NetCtrl status
004C - 007E	Use with *U1-xx, U4-xx, U6-xx [Monitors]*. Refer to "U2: Fault Trace", "U3: Fault History", and "U9: Fault Trace" for more information.	
007F	Minor fault code (Refer to "Minor fault description" for more information about the minor fault codes.)	
0080 - 0097	Use with *U2-xx, U3-xx, U9-xx [Monitors]*. Refer to "U: Monitor" for more information, and refer to "Fault Trace/Fault History Descriptions" for more information about register values.	
0098 - 0099	U4-01 [Cumulative Ope Time] Example: When *U4-01 [Cumulative Ope Time = 12345]*, 0098 (Hex.) = 1234 and 0099 (Hex.) = 5.	
009A - 009B	U4-03 [Cooling Fan Ope Time] Example: When *U4-03 [Cooling Fan Ope Time = 12345]*, 009A (Hex.) = 1234 and 009B (Hex.) = 5.	
009C - 00AA	Reserved	
00AB	Continuous rated output current of the drive **Note:** The unit of display is different for different models. 2022 to 2041, 4012 to 4023: 0.01 A 2059 to 2519, 4030 to 4380: 0.1 A	
00AC	U1-05 [Speed Feedback]	Units: min^{-1} or r/min **Note:** Set *E2-04, E4-04, E5-04 [Motor Pole Count]*.
00AD		Units: 0.01%
00AE - 00AF	Reserved	
00B0	Option codes connected to CN5-A	The drive stores option codes in the register. DI-A3 = 0001 (Hex.) DO-A3 = 0002 (Hex.) AO-A3 = 0004 (Hex.) PG-B3 = 0011 (Hex.) PG-X3 = 0012 (Hex.) PG-F3 = 0021 (Hex.) PG-E3 = 0022 (Hex.) SI-S3 = 5353 (Hex.)
00B1	Reserved	
00B2	Option codes connected to CN5-B	
00B3	Option codes connected to CN5-C	
00B4	Reserved	
00B5	U1-16 [SFS Output Speed]	Units: min^{-1} or r/min **Note:** Set *E2-04, E4-04, E5-04 [Motor Pole Count]*.
00B6		Units: 0.01%

Register No. (Hex.)	Description	
00B7	Speed reference monitor	Units: min^{-1} or r/min **Note:** Set *E2-04, E4-04, E5-04 [Motor Pole Count]*.
00B8		Units: 0.01%
00B9 - 00BE	Reserved	
00BF	Operation error number *xx* of *oPExx* is displayed.	
00C0	Fault Description 3	
	bit 0	Reserved
	bit 1	Uv1 [DC Bus Undervoltage]
	bit 2	Uv2 [Control Power Undervoltage]
	bit 3	Uv3 [Soft Charge Answerback Fault]
	bit 4	SC [Short Circuit/IGBT Failure]
	bit 5	GF [Ground Fault]
	bit 6	oC [Overcurrent]
	bit 7	ov [Overvoltage]
	bit 8	oH [Heatsink Overheat]
	bit 9	oH1 [Heatsink Overheat]
	bit A	oL1 [Motor Overload]
	bit B	oL2 [Drive Overload]
	bit C	oL3 [Overtorque Detection 1]
	bit D	oL4 [Overtorque Detection 2]
	bit E	rr [Dynamic Braking Transistor Fault]
	bit F	Reserved
00C1	Fault Description 4	
	bit 0	EF3 [External Fault (Terminal S3)]
	bit 1	EF4 [External Fault (Terminal S4)]
	bit 2	EF5 [External Fault (Terminal S5)]
	bit 3	EF6 [External Fault (Terminal S6)]
	bit 4	EF7 [External Fault (Terminal S7)]
	bit 5	EF8 [External Fault (Terminal S8)]
	bit 6	FAn [Internal Fan Fault]
	bit 7	oS [Overspeed]
	bit 8	dEv [Speed Deviation]
	bit 9	PGo [Encoder (PG) Feedback Loss]
	bit A	PF [Input Phase Loss]
	bit B	LF [Output Phase Loss]
	bit C	oH3 [Motor Overheat (PTC Input)]
	bit D	oPr [Keypad Connection Fault]
	bit E	Err [EEPROM Write Error]
	bit F	oH4 [Motor Overheat Fault (PTC Input)]

Register No. (Hex.)	Description	
00C2	Fault Description 5	
	bit 0	CE [Modbus Communication Error]
	bit 1	bUS [Option Communication Error]
	bit 2 - 3	Reserved
	bit 4	CF [Control Fault]
	bit 5	SvE [Zero Servo Fault]
	bit 6	EF0 [Option Card External Fault]
	bit 7	Reserved
	bit 8	UL3 [Undertorque Detection 1]
	bit 9	UL4 [Undertorque Detection 2]
	bit A - E	Reserved
	bit F	Hardware Fault (includes *oFx* fault)
00C3	Fault Description 6	
	bit 0	Reserved
	bit 1	dv1 [Z Pulse Fault]
	bit 2	dv2 [Z Pulse Noise Fault Detection]
	bit 3	dv3 [Inversion Detection]
	bit 4	dv4 [Inversion Prevention Detection]
	bit 5	LF2 [Output Current Imbalance]
	bit 6	Reserved
	bit 7	PGoH [Encoder (PG) Hardware Fault]
	bit 8 - F	Reserved
00C4	Fault Description 7	
	bit 0 - C	Reserved
	bit D	rF [Braking Resistor Fault]
	bit E	boL [BrakingTransistor Overload Fault]
	bit F	Reserved
00C5	Fault Description 8	
	bit 0 - 2	Reserved
	bit 3	dv6 [Over Jerk]
	bit 4	SE1 [Motor Contactor Response Error]
	bit 5	SE2 [Starting Current Error]
	bit 6	SE3 [Output Current Error]
	bit 7	SE4 [Brake Response Error]
	bit 8	FrL [Speed Reference Missing]
	bit 9	Reserved
	bit A	dv7 [Polarity Judge Timeout]
	bit B	Reserved
	bit C	dv8 [PM Rotor Position Detection Error]
	bit D	PF5 [Rescue Power Supply Low Error]
	bit E - F	Reserved
00C6 - 00C7	Reserved	

Register No. (Hex.)	Description	
00C8	Minor Fault Description 2	
	bit 0	Uv [Undervoltage]
	bit 1	ov [DC Bus Overvoltage]
	bit 2	oH [Heatsink Overheat]
	bit 3	Reserved
	bit 4	oL3 [Overtorque 1]
	bit 5	oL4 [Overtorque 2]
	bit 6	EF [Up/Down Command Input Error]
	bit 7	bb [Baseblock]
	bit 8	EF3 [External Fault (Terminal S3)]
	bit 9	EF4 [External Fault (Terminal S4)]
	bit A	EF5 [External Fault (Terminal S5)]
	bit B	EF6 [External Fault (Terminal S6)]
	bit C	EF7 [External Fault (Terminal S7)]
	bit D	EF8 [External Fault (Terminal S8)]
	bit E	FAn [Internal Fan Fault]
	bit F	oS [Overspeed]
00C9	Minor Fault Description 3	
	bit 0	dEv [Speed Deviation]
	bit 1	PGo [Encoder (PG) Feedback Loss]
	bit 2	Reserved
	bit 3	CE [Modbus Communication Error]
	bit 4	bUS [Option Communication Error]
	bit 5	CALL [Serial Comm Transmission Error]
	bit 6 - 8	Reserved
	bit 9	EF0 [Option Card External Fault]
	bit A	rUn [Motor Switch during Run]
	bit B	Reserved
	bit C	CALL [Serial Comm Transmission Error]
	bit D	UL3 [Undertorque Detection 1]
	bit E	UL4 [Undertorque Detection 2]
	bit F	SE [Modbus Test Mode Error]
00CA	Minor Fault Description 4	
	bit 0	L24v [Loss of External Power 24 Supply]
	bit 1	oH3 [Motor Overheat (PTC Input)]
	bit 2 - 9	Reserved
	bit A	PGoH [Encoder (PG) Hardware Fault]
	bit B - F	Reserved

Register No. (Hex.)	Description	
00CB	Minor Fault Description 5	
	bit 0 - 2	Reserved
	bit 3	HCA [High Current Alarm]
	bit 4	LT-1 [Cooling Fan Maintenance Time]
	bit 5	LT-2 [Capacitor Maintenance Time]
	bit 6 - 9	Reserved
	bit A	SToF [Safe Torque OFF Hardware]
	bit B	STo [Safe Torque OFF]
	bit C - F	Reserved
00CC	Minor Fault Description 6	
	bit 0	voF [Output Voltage Detection Alarm]
	bit 1	Reserved
	bit 2	LT-3 [SoftChargeBypassRelay MainteTime]
	bit 3	LT-4 [IGBT Maintenance Time]
	bit 4	boL [Braking Transistor Overload]
	bit 5 - F	Reserved
00CD - 00CF	Reserved	
00D0	CPF Contents 1	
	bit 0 - 1	Reserved
	bit 2	CPF02 [Control Circuit Error]
	bit 3	CPF03 [Control Circuit Error]
	bit 4 - 5	Reserved
	bit 6	CPF06 [Control Circuit Error (EEPROM memory Data Error)]
	bit 7	CPF07 [Control Circuit Error]
	bit 8	CPF08 [Control Circuit Error]
	bit 9	Reserved
	bit A	CPF10 [Control Circuit Error]
	bit B	CPF11 [Control Circuit Error]
	bit C	CPF12 [Control Circuit Error]
	bit D	CPF13 [Control Circuit Error]
	bit E	CPF14 [Control Circuit Error]
	bit F	Reserved

Register No. (Hex.)	Description	
00D1	CPF Contents 2	
	bit 0	CPF16 [Control Circuit Error]
	bit 1	CPF17 [Control Circuit Error]
	bit 2	CPF18 [Control Circuit Error]
	bit 3	CPF19 [Control Circuit Error]
	bit 4	CPF20 [Control Circuit Error]
	bit 5	CPF21 [Control Circuit Error]
	bit 6	CPF22 [Control Circuit Error]
	bit 7	CPF23 [Control Circuit Error]
	bit 8	CPF24 [Control Circuit Error (Drive Unit Signal Fault)]
	bit 9	Reserved
	bit A	CPF26 [Control Circuit Error]
	bit B	CPF27 [Control Circuit Error]
	bit C	CPF28 [Control Circuit Error]
	bit D	CPF29 [Control Circuit Error]
	bit E	CPF30 [Control Circuit Error]
	bit F	CPF31 [Control Circuit Error]
00D2	CPF Contents 3	
	bit 0	CPF32 [Control Circuit Error]
	bit 1	CPF33 [Control Circuit Error]
	bit 2	CPF34 [Control Circuit Error]
	bit 3	CPF35 [Control Circuit Error]
	bit 4	CPF36 [Control Circuit Error]
	bit 5	CPF37 [Control Circuit Error]
	bit 6	CPF38 [Control Circuit Error]
	bit 7	CPF39 [Control Circuit Error]
	bit 8 - F	Reserved
00D3 - 00D7	Reserved	
00D8	oFA0x Description (CN5-A)	
	bit 0	oFA00 [Option Not Compatible with Port]
	bit 1	oFA01 [Option Fault/Connection Error]
	bit 2 - 4	Reserved
	bit 5	oFA05 [Option A/D Error]
	bit 6	oFA06 [Option Communication Error]
	bit 7 - F	Reserved
00D9	oFA1x Description (CN5-A)	
	bit 0	oFA10 [Option RAM Error]
	bit 1	oFA11 [Option Ope Mode Error]
	bit 2	oFA12 [Drive Receive CRC Error]
	bit 3	oFA13 [Drive Receive Frame Error]
	bit 4	oFA14 [Drive Receive Abort Error]
	bit 5	oFA15 [Option Receive CRC Error]
	bit 6	oFA16 [Option Receive Frame Error]
	bit 7	oFA17 [Option Receive Abort Error]
	bit 8 - F	Reserved
00DA	Reserved	

Register No. (Hex.)	Description	
00DB	oFA3x Description (CN5-A)	
	bit 0	oFA30 [COM ID Error]
	bit 1	oFA31 [Type Code Error]
	bit 2	oFA32 [SUM Check Error]
	bit 3	oFA33 [Option Receive Time Over]
	bit 4	oFA34 [Memobus Time Over]
	bit 5	oFA35 [Drive Receive Time Over 1]
	bit 6	oFA36 [CI Check Error]
	bit 7	oFA37 [Drive Receive Time Over 2]
	bit 8	oFA38 [Control Reference Error]
	bit 9	oFA39 [Drive Receive Time Over 3]
	bit A	oFA40 [CtrlResSel 1Err]
	bit B	oFA41 [Drive Receive Time Over 4]
	bit C	oFA42 [CtrlResSel 2Err]
	bit D	oFA43 [Drive Receive Time Over 5]
	bit E - F	Reserved
00DC	oFb0x Description (CN5-B)	
	bit 0	oFb00 [Option Not Compatible with Port]
	bit 1	oFb01 [Option Fault/Connection Error]
	bit 2	oFb02 [Duplicate Options]
	bit 3 - 4	Reserved
	bit 5	oFb05 [Option A/D Error]
	bit 6	oFb06 [Option Communication Error]
	bit 7 - F	Reserved
00DD	oFb1x Description (CN5-B)	
	bit 0	oFb10 [Option RAM Error]
	bit 1	oFb11 [Option Ope Mode Error]
	bit 2	oFb12 [Drive Receive CRC Error]
	bit 3	oFb13 [Drive Receive Frame Error]
	bit 4	oFb14 [Drive Receive Abort Error]
	bit 5	oFb15 [Option Receive CRC Error]
	bit 6	oFb16 [Option Receive Frame Error]
	bit 7	oFb17 [Option Receive Abort Error]
	bit 8 - F	Reserved
00DE - 00DF	Reserved	

Register No. (Hex.)	Description	
00E0	oFb3x Description (CN5-B)	
	bit 0	oFb30 [COM ID Error]
	bit 1	oFb31 [Type Code Error]
	bit 2	oFb32 [SUM Check Error]
	bit 3	oFb33 [Option Receive Time Over]
	bit 4	oFb34 [Memobus Time Over]
	bit 5	oFb35 [Drive Receive Time Over 1]
	bit 6	oFb36 [CI Check Error]
	bit 7	oFb37 [Drive Receive Time Over 2]
	bit 8	oFb38 [Control Reference Error]
	bit 9	oFb39 [Drive Receive Time Over 3]
	bit A	oFb40 [CtrlResSel 1Err]
	bit B	oFb41 [Drive Receive Time Over 4]
	bit C	oFb42 [CtrlResSel 2Err]
	bit D	oFb43 [Drive Receive Time Over 5]
	bit E - F	Reserved
00E1	oFC0x Description (CN5-C)	
	bit 0	oFC00 [Option Not Compatible with Port]
	bit 1	oFC01 [Option Fault/Connection Error]
	bit 2	oFC02 [Duplicate Options]
	bit 3 - 4	Reserved
	bit 5	oFC05 [Option A/D Error]
	bit 6	oFC06 [Option Communication Error]
	bit 7 - F	Reserved
00E2	oFC1x Description (CN5-C)	
	bit 0	oFC10 [Option RAM Error]
	bit 1	oFC11 [Option Ope Mode Error]
	bit 2	oFC12 [Drive Receive CRC Error]
	bit 3	oFC13 [Drive Receive Frame Error]
	bit 4	oFC14 [Drive Receive Abort Error]
	bit 5	oFC15 [Option Receive CRC Error]
	bit 6	oFC16 [Option Receive Frame Error]
	bit 7	oFC17 [Option Receive Abort Error]
	bit 8 - F	Reserved
00E3	Reserved	
00E4	oFC5x Description (CN5-C)	
	bit 0	oFC50 [Encoder Option A/D Conv Error]
	bit 1	oFC51 [EncOpAnlgCrctErr]
	bit 2	oFC52 [Encoder Option Comm Timeout]
	bit 3	oFC53 [Encoder Option Comm Data Fault]
	bit 4	oFC54 [Encoder Error]
	bit 5	oFC55 [Resolver Error]
	bit 6 - F	Reserved

Register No. (Hex.)	Description	
00E5	Minor Fault Description 9	
	bit 0	EP24v [External Power 24V Supply]
	bit 1 - 3	Reserved
	bit 4	bAT [Keypad Battery Low Voltage]
	bit 5 - 7	Reserved
	bit 8	TiM [Keypad Time Not Set]
	bit 9	bCE [Bluetooth Communication Error]
	bit A - F	Reserved
00E6 - 00E9	Reserved	
00EA	Fault Description 11	
	bit 0	TiM [Keypad Time Not Set]
	bit 1	bAT [Keypad Battery Low Voltage]
	bit 2- D	Reserved
	bit E	SCF [Safety Circuit Fault]
	bit F	Reserved
00EB - 00ED	Reserved	
00EE	Fault Description 12	
	bit 0 - 4	Reserved
	bit 5	bCE [Bluetooth Communication Fault]
	bit 6 - F	Reserved
00EF - 00FA	Reserved	
00FB	Output current **Note:** The unit of display is different for different models. 2022 to 2041, 4012 to 4023: 0.01 A 2059 to 2519, 4030 to 4380: 0.1 A	

■ Broadcast Messages

Broadcast messages are available as read-only.

Bit signals that are not defined as simultaneous broadcast operation signals will use their own station data signals.

Table 6.16 Broadcast Messages for MEMOBUS/Modbus Communication

Register No. (Hex.)	Description	
0001	Operation signal	
	bit 0	Up/Down command 1: Run, 0: Stop
	bit 1	Down command 1: Down, 0: Up
	bit 2 - 3	Reserved
	bit 4	External Fault 1: EF0 [Option Card External Fault]
	bit 5	Fault Reset 1: Reset command
	bit 6 - B	Reserved
	bit C	MFDI terminal S5 input
	bit D	MFDI terminal S6 input
	bit E	MFDI terminal S7 input
	bit F	MFDI terminal S8 input
0002	Speed Reference	30000/100%

■ Fault Trace/Fault History Contents

Table 6.17 shows the fault codes that the commands from monitors *U2-xx [Fault Trace]*, *U3-xx [Fault History]*, *U9-xx [Fault Trace]* read.

Table 6.17 Fault Trace/Fault History Contents

Fault Code (Hex.)	Name
0002	Uv1 [DC Bus Undervoltage]
0003	Uv2 [Control Power Undervoltage]
0004	Uv3 [Soft Charge Answerback Fault]
0005	SC [Short Circuit/IGBT Failure]
0006	GF [Ground Fault]
0007	oC [Overcurrent]
0008	ov [Overvoltage]
0009	oH [Heatsink Overheat]
000A	oH1 [Heatsink Overheat]
000B	oL1 [Motor Overload]
000C	oL2 [Drive Overload]
000D	oL3 [Overtorque Detection 1]
000E	oL4 [Overtorque Detection 2]
000F	rr [Dynamic Braking Transistor Fault]
0011	EF3 [External Fault (Terminal S3)]
0012	EF4 [External Fault (Terminal S4)]
0013	EF5 [External Fault (Terminal S5)]
0014	EF6 [External Fault (Terminal S6)]
0015	EF7 [External Fault (Terminal S7)]
0016	EF8 [External Fault (Terminal S8)]
0017	FAn [Internal Fan Fault]
0018	oS [Overspeed]
0019	dEv [Speed Deviation]
001A	PGo [Encoder (PG) Feedback Loss]
001B	PF [Input Phase Loss]
001C	LF [Output Phase Loss]
001D	oH3 [Motor Overheat (PTC Input)]
001E	oPr [Keypad Connection Fault]
001F	Err [EEPROM Write Error]
0020	oH4 [Motor Overheat Fault (PTC Input)]
0021	CE [Modbus Communication Error]
0022	bUS [Option Communication Error]
0025	CF [Control Fault]
0026	SvE [Zero Servo Fault]
0027	EF0 [Option Card External Fault]
0029	UL3 [Undertorque Detection 1]
002A	UL4 [Undertorque Detection 2]
002C	EF9 [External Fault (Terminal S9)]
002D	EF10 [External Fault (Terminal S10)]
0032	dv1 [Z Pulse Fault]
0033	dv2 [Z Pulse Noise Fault Detection]
0034	dv3 [Inversion Detection]
0035	dv4 [Inversion Prevention Detection]
0036	LF2 [Output Current Imbalance]
0038	PGoH [Encoder (PG) Hardware Fault]
004E	rF [Braking Resistor Fault]
004F	boL [BrakingTransistor Overload Fault]
0054	dv6 [Over Jerk]
0055	SE1 [Motor Contactor Response Error]
0056	SE2 [Starting Current Error]
0057	SE3 [Output Current Error]
0058	SE4 [Brake Response Error]
0059	FrL [Speed Reference Missing]
005B	dv7 [Polarity Judge Timeout]
005D	dv8 [PM Rotor Position Detection Error]
005E	PF5 [Rescue Power Supply Low Error]
0071	brA [Brake Deterioration]
0081	CPF00 [Control Circuit Error]
0082	CPF01 [Control Circuit Error]
0083	CPF02 [Control Circuit Error]
0084	CPF03 [Control Circuit Error]
0087	CPF06 [Control Circuit Error (EEPROM memory Data Error)]
0088	CPF07 [Control Circuit Error]
0089	CPF08 [Control Circuit Error]
008B	CPF10 [Control Circuit Error]
008C	CPF11 [Control Circuit Error]
008D	CPF12 [Control Circuit Error]
008E	CPF13 [Control Circuit Error]
008F	CPF14 [Control Circuit Error]
0091	CPF16 [Control Circuit Error]
0092	CPF17 [Control Circuit Error]
0093	CPF18 [Control Circuit Error]
0094	CPF19 [Control Circuit Error]
0095	CPF20 [Control Circuit Error]
0096	CPF21 [Control Circuit Error]
0097	CPF22 [Control Circuit Error]
0098	CPF23 [Control Circuit Error]
0099	CPF24 [Control Circuit Error (Drive Unit Signal Fault)]
009B	CPF26 [Control Circuit Error]
009C	CPF27 [Control Circuit Error]
009D	CPF28 [Control Circuit Error]
009E	CPF29 [Control Circuit Error]
009F	CPF30 [Control Circuit Error]
00A0	CPF31 [Control Circuit Error]

Fault Code (Hex.)	Name
00A1	CPF32 [Control Circuit Error]
00A2	CPF33 [Control Circuit Error]
00A3	CPF34 [Control Circuit Error]
00A4	CPF35 [Control Circuit Error]
00A5	CPF36 [Control Circuit Error]
00A6	CPF37 [Control Circuit Error]
00A7	CPF38 [Control Circuit Error]
00A8	CPF39 [Control Circuit Error]
0101	oFA00 [Option Not Compatible with Port]
0102	oFA01 [Option Fault/Connection Error]
0106	oFA05 [Option A/D Error]
0107	oFA06 [Option Communication Error]
0111	oFA10 [Option RAM Error]
0112	oFA11 [Option Ope Mode Error]
0113	oFA12 [Drive Receive CRC Error]
0114	oFA13 [Drive Receive Frame Error]
0115	oFA14 [Drive Receive Abort Error]
0116	oFA15 [Option Receive CRC Error]
0117	oFA16 [Option Receive Frame Error]
0118	oFA17 [Option Receive Abort Error]
0131	oFA30 [COM ID Error]
0132	oFA31 [Type Code Error]
0133	oFA32 [SUM Check Error]
0134	oFA33 [Option Receive Time Over]
0135	oFA34 [Memobus Time Over]
0136	oFA35 [Drive Receive Time Over 1]
0137	oFA36 [CI Check Error]
0138	oFA37 [Drive Receive Time Over 2]
0139	oFA38 [Control Reference Error]
013A	oFA39 [Drive Receive Time Over 3]
013B	oFA40 [CtrlResSel 1Err]
013C	oFA41 [Drive Receive Time Over 4]
013D	oFA42 [CtrlResSel 2Err]
013E	oFA43 [Drive Receive Time Over 5]
0201	oFb00 [Option Not Compatible with Port]
0202	oFb01 [Option Fault/Connection Error]
0203	oFb02 [Duplicate Options]
0206	oFb05 [Option A/D Error]
0207	oFb06 [Option Communication Error]
0211	oFb10 [Option RAM Error]
0212	oFb11 [Option Ope Mode Error]
0213	oFb12 [Drive Receive CRC Error]
0214	oFb13 [Drive Receive Frame Error]
0215	oFb14 [Drive Receive Abort Error]
0216	oFb15 [Option Receive CRC Error]

Fault Code (Hex.)	Name
0217	oFb16 [Option Receive Frame Error]
0218	oFb17 [Option Receive Abort Error]
0231	oFb30 [COM ID Error]
0232	oFb31 [Type Code Error]
0233	oFb32 [SUM Check Error]
0234	oFb33 [Option Receive Time Over]
0235	oFb34 [Memobus Time Over]
0236	oFb35 [Drive Receive Time Over 1]
0237	oFb36 [CI Check Error]
0238	oFb37 [Drive Receive Time Over 2]
0239	oFb38 [Control Reference Error]
023A	oFb39 [Drive Receive Time Over 3]
023B	oFb40 [CtrlResSel 1Err]
023C	oFb41 [Drive Receive Time Over 4]
023D	oFb42 [CtrlResSel 2Err]
023E	oFb43 [Drive Receive Time Over 5]
0301	oFC00 [Option Not Compatible with Port]
0302	oFC01 [Option Fault/Connection Error]
0303	oFC02 [Duplicate Options]
0306	oFC05 [Option A/D Error]
0307	oFC06 [Option Communication Error]
0311	oFC10 [Option RAM Error]
0312	oFC11 [Option Ope Mode Error]
0313	oFC12 [Drive Receive CRC Error]
0314	oFC13 [Drive Receive Frame Error]
0315	oFC14 [Drive Receive Abort Error]
0316	oFC15 [Option Receive CRC Error]
0317	oFC16 [Option Receive Frame Error]
0318	oFC17 [Option Receive Abort Error]
0351	oFC50 [Encoder Option A/D Conv Error]
0352	oFC51 [EncOpAnlgCrctErr]
0353	oFC52 [Encoder Option Comm Timeout]
0354	oFC53 [Encoder Option Comm Data Fault]
0355	oFC54 [Encoder Error]
0356	oFC55 [Resolver Error]
0401	TiM [Keypad Time Not Set]
0402	bAT [Keypad Battery Low Voltage]
040F	SCF [Safety Circuit Fault]
0413	FAn1 [Drive Cooling Fan Failure]
0416	bCE [Bluetooth Communication Fault]
0459	TCF [TDCC Fault]
045D	SE8 [Sequence Error8]
045E	SCE [Short Circuit Brake Sequence Error]
0464	MCF [Input MC Failure]

■ Minor Fault/Alarm Contents

Table 6.18 shows the minor fault/alarm codes that communications register (007F (Hex.)) reads.

Table 6.18 Minor Fault/Alarm Contents (007F (Hex.))

Minor Fault/ Alarm Code (Hex.)	Name
0001	Uv [Undervoltage]
0002	ov [DC Bus Overvoltage]
0003	oH [Heatsink Overheat]
0005	oL3 [Overtorque 1]
0006	oL4 [Overtorque 2]
0007	EF [Up/Down Command Input Error]
0008	bb [Baseblock]
0009	EF3 [External Fault (Terminal S3)]
000A	EF4 [External Fault (Terminal S4)]
000B	EF5 [External Fault (Terminal S5)]
000C	EF6 [External Fault (Terminal S6)]
000D	EF7 [External Fault (Terminal S7)]
000E	EF8 [External Fault (Terminal S8)]
000F	FAn [Internal Fan Fault]
0010	oS [Overspeed]
0011	dEv [Speed Deviation]
0012	PGo [Encoder (PG) Feedback Loss]
0014	CE [Modbus Communication Error]
0015	bUS [Option Communication Error]
001A	EF0 [Option Card External Fault]
001B	rUn [Motor Switch during Run]
001D	CALL [Serial Comm Transmission Error]
001E	UL3 [Undertorque Detection 1]
001F	UL4 [Undertorque Detection 2]
0020	SE [Modbus Test Mode Error]

Minor Fault/ Alarm Code (Hex.)	Name
0021	L24v [Loss of External Power 24 Supply]
0022	oH3 [Motor Overheat (PTC Input)]
0023	EF9 [External Fault (Terminal S9)]
0024	EF10 [External Fault (Terminal S10)]
0029	CyPo [Cycle Power to Accept Changes]
002B	PGoH [Encoder (PG) Hardware Fault]
0034	HCA [High Current Alarm]
0035	LT-1 [Cooling Fan Maintenance Time]
0036	LT-2 [Capacitor Maintenance Time]
0037	CF [Ctrl Failure/STOP]
003B	SToF [Safe Torque OFF Hardware]
0041	voF [Output Voltage Detection Alarm]
0043	LT-3 [SoftChargeBypassRelay MainteTime]
0044	LT-4 [IGBT Maintenance Time]
0045	boL [Braking Transistor Overload]
0047	PF [Input Phase Loss]
0072	brTC [During Brake Torque Check]
0081	EP24v [External Power 24V Supply]
0085	bAT [Keypad Battery Low Voltage]
0089	TiM [Keypad Time Not Set]
008A	bCE [Bluetooth Communication Error]
00D0	SE4 [SE4 Alarm]
00D1	TCS [TDCC Setup]
00D2	TCA [TDCC Alarm]

◆ Error Codes

■ MEMOBUS/Modbus Communications Error Code List

Table 6.19 lists the MEMOBUS/Modbus communications error codes.
When an error occurs, remove the cause of the error and restart communications.

Table 6.19 MEMOBUS/Modbus Communications Error Codes

Error Code (Hex.)	Name	Cause
01	Function Code Error	The PLC set a function code that was not 03, 08, or 10 (Hex.)
02	Register Number Error	• The register number that is trying to access is not registered. • A starting number that was not 0001 or 0002 (Hex.) was set when broadcasting.
03	Bit Count Error	• Read and write data quantities are more than the 1 to 16 range (command message data quantity is disabled). • The data read from non-consecutive holding registers contained more than 120 bytes. • The data to be written to non-consecutive holding registers contained more than 60 bytes. • In the write mode, the number of bytes in the message is not the number of data × 2.
21	Data Setting Error	• Writing control data or parameters made the settings go out of the permitted setting range. • A parameter setting error occurred when writing a parameter.

Error Code (Hex.)	Name	Cause
22	Write Mode Error	• Tried to write a disabled parameter during run. • When there was a *CPF06 [Control Circuit Error]*, the master tried to write a parameter that was not one of these: – *A1-00 [Language Selection]* – *A1-01 [Access Level Selection]* – *A1-02 [Control Method Selection]* – *A1-03 [Initialize Parameters]* – *A1-04 [Password]* – *A1-05 [Password Setting]* – *E1-03 [V/f Pattern Selection]* – *o2-04 [Drive Model (KVA) Selection]* • Tried to write the read-only data.
23	DC Bus Undervoltage Write Error	During *Uv [DC Bus Undervoltage]*, the master tried to write a *Uv* write-disabled parameter.
24	Error Writing Data During Parameter Processing	During parameter processing on the drive side, the master tried to write a parameter.
25	Writing into EEPROM Disabled	Writing into EEPROM write is disabled, but EEPROM write was executed from MEMOBUS/Modbus communications. When this error occurs, the keypad shows a message and the drive continues operation.

■ No Response from Slave

The slave ignores the command message from the master and will not send a response message in these conditions:

- When a communications error (overrun, framing, parity, CRC-16) is detected in the command message
- When the slave address in the command message and the slave address for the drive side do not agree (Use *H5-01 [Drive Node Address]* to set the slave address of the drive)
- When the time interval between the data of which the message is composed is longer than 24 bits
- When the data length for the command message is not accurate

Note:
- If the keypad shows *CALL [Serial Comm Transmission Error]*, refer to "Troubleshooting" to remove the cause of the error, and try to do communications again. If the keypad does not show *CALL*, check *U1-19 [MEMOBUS/Modbus Error Code]* for the error and error type.
- If you execute the write function code when the slave address in the command message is 00 (Hex.), all of the slaves will execute the write command, but they will not send response messages to the master.

7

Troubleshooting

7.1 Section Safety 298
7.2 Types of Faults, Minor Faults, Alarms, and Errors 300
7.3 List of Fault, Minor Fault, Alarm, and Error Codes 301
7.4 Fault 306
7.5 Minor Faults/Alarms 331
7.6 Parameter Setting Errors 340
7.7 Auto-Tuning Error 343
7.8 Backup Function Operating Mode Display and Errors 347
7.9 Diagnosing and Resetting Faults 348
7.10 Troubleshooting Without Fault Display 350

7.1 Section Safety

⚠DANGER

Electrical Shock Hazard

Do not examine, connect, or disconnect wiring on an energized drive. Before servicing, disconnect all power to the equipment and wait for the time specified on the warning label at a minimum. The internal capacitor stays charged after the drive is de-energized. The charge indicator LED extinguishes when the DC bus voltage decreases below 50 Vdc. When all indicators are OFF, remove the covers before measuring for dangerous voltages to make sure that the drive is safe.

If you do work on the drive when it is energized, it will cause serious injury or death from electrical shock.

⚠WARNING

Electrical Shock Hazard

Do not operate the drive when covers are missing. Replace covers and shields before you operate the drive. Use the drive only as specified by the instructions.

Some figures in this section include drives without covers or safety shields to more clearly show the inside of the drive. If covers or safety shields are missing from the drive, it can cause serious injury or death.

Always ground the motor-side grounding terminal.

If you do not ground the equipment correctly, it can cause serious injury or death if you touch the motor case.

After the drive blows a fuse or trips an ELCB, do not immediately energize the drive or operate peripheral devices. Wait for the time specified on the warning label at a minimum and make sure that all indicators are OFF. Then check the wiring and peripheral device ratings to find the cause of the problem. If you do not know the cause of the problem, contact Yaskawa before you energize the drive or peripheral devices.

If you do not fix the problem before you operate the drive or peripheral devices, it can cause serious injury or death.

Only let approved personnel install, wire, maintain, examine, replace parts, and repair the drive.

If personnel are not approved, it can cause serious injury or death.

Do not wear loose clothing or jewelry when you do work on the drive. Tighten loose clothing and remove all metal objects, for example watches or rings.

Loose clothing can catch on the drive and jewelry can conduct electricity and cause serious injury or death.

Do not remove covers or touch circuit boards while the drive is energized.

If you touch the internal components of an energized drive, it can cause serious injury or death.

Do not modify the drive body or drive circuitry.

Modifications to drive body and circuitry can cause serious injury or death, will cause damage to the drive, and will void the warranty. Yaskawa is not responsible for modifications of the product made by the user.

Fire Hazard

Tighten all terminal screws to the correct tightening torque.

Connections that are too loose or too tight can cause incorrect operation and damage to the drive. Incorrect connections can also cause death or serious injury from fire.

Tighten screws at an angle in the specified range shown in this manual.

If you tighten the screws at an angle not in the specified range, you can have loose connections that can cause damage to the terminal block or start a fire and cause serious injury or death.

Damage to Equipment

Do not apply incorrect voltage to the main circuit of the drive. Operate the drive in the specified range of the input voltage on the drive nameplate.

Voltages that are higher than the permitted nameplate tolerance can cause damage to the drive.

⚠WARNING

Fire Hazard

Do not put flammable or combustible materials on top of the drive and do not install the drive near flammable or combustible materials. Attach the drive to metal or other noncombustible material.

Flammable and combustible materials can start a fire and cause serious injury or death.

Crush Hazard

Wear eye protection when you do work on the drive.

If you do not use correct safety equipment, it can cause serious injury or death.

Use a crane or hoist to move large drives when necessary.

If you try to move a large drive without a crane or hoist, it can cause serious injury or death.

NOTICE

Damage to Equipment

When you touch the drive and circuit boards, make sure that you observe correct electrostatic discharge (ESD) procedures.

If you do not follow procedures, it can cause ESD damage to the drive circuitry.

Do not break the electrical connection between the drive and the motor when the drive is outputting voltage.

Incorrect equipment sequencing can cause damage to the drive.

Make sure that all connections are correct after you install the drive and connect peripheral devices.

Incorrect connections can cause damage to the drive.

Note:

Do not use unshielded wire for control wiring. Use shielded, twisted-pair wires and ground the shield to the ground terminal of the drive. Unshielded wire can cause electrical interference and unsatisfactory system performance.

7.2 Types of Faults, Minor Faults, Alarms, and Errors

If the drive or motor do not operate correctly, check the drive keypad for a code or message.

If problems occur that are not identified in this manual, contact the nearest Yaskawa representative with this information:

- Drive model
- Drive software version
- Date of purchase
- Description of the problem (such as failure conditions)

Table 7.1 contains descriptions of the different types of faults, minor faults, alarms, and errors that can occur during drive operation.

Table 7.1 Types of Faults, Minor Faults, Alarms, and Errors

Type	Drive Response
Faults	When the drive detects a fault, it will cause these conditions: • The keypad shows the fault code and  and ALM/ERR of the LED Status Ring illuminate continuously. • The drive shuts off output, and the motor coasts to a stop. Some faults let the user select a motor stopping method. • Fault relay output MA-MC will turn ON, and MB-MC will turn OFF. The drive will not operate until you clear the fault with a Fault Reset and the drive goes back to usual status.
Minor Faults/Alarms	When the drive detects a minor fault or an alarm, it will cause these conditions: • The keypad shows the alarm code and  and ALM/ERR on the LED Status Ring flash. • The drive will continue to operate the motor. Some alarms let you select a motor stopping method. • If the drive detects a minor fault, the terminal set to *H2-01 to H2-05 = 10 [MFDO Function Selection = Alarm]* will activate. If you do not set parameters *H2-01 to H2-05*, the drive will not trigger MFDO terminals when it detects a minor fault. • The drive will not output a minor fault signal when it detects an alarm. It is not necessary to do Fault Reset.
Operation Errors	An error occurs when parameter settings do not agree or a parameter combination is incorrect. The drive will not operate until you set the parameters correctly. When the drive detects an operation error, these conditions will result: • The keypad shows the error code. • Multi-function outputs do not output an alarm signal. Find the parameters that caused the error and correct the settings.
Auto-Tuning Errors	An error occurs during Auto-Tuning. When the drive detects a tuning error, it will cause these conditions: • The keypad shows the error code. • Multi-function outputs do not output an alarm signal. • The motor coasts to stop. Remove the cause of the error and do Auto-Tuning again.
Copy Function Errors	An error occurs when you use the keypad for a backup, restore, or verify operation. When the drive detects a copy function error, it will cause these conditions: • The keypad shows the error code. • Multi-function outputs do not output an alarm signal. Push a key on the keypad to clear the error. Remove the cause of the error and try the backup, restore, or verify operation again.

7.3 List of Fault, Minor Fault, Alarm, and Error Codes

Table 7.2 shows the possible fault, minor fault, alarm, and error codes.

The display codes are in alphabetical order. Search the table for the code shown on the keypad, and identify its causes and possible solutions.

Note:

The number in parentheses adjacent to the code in the table identifies the fault code or minor fault code (hex. number) that was read during MEMOBUS/Modbus communications.

Example: bAT (0085)

Table 7.2 List of Fault, Minor Fault, Alarm, and Error Codes

Display (Hex.)	Name	ALM LED	Type	Ref.
bAT (0085)	Keypad Battery Low Voltage	Flashing	Alarm	331
bAT (0402)	Keypad Battery Low Voltage	Illuminated	Fault	306
bb (0008)	Baseblock	Flashing	Alarm	331
bCE (008A)	Bluetooth Communication Error	Flashing	Alarm	331
bCE (0416)	Bluetooth Communication Fault	Illuminated	Fault	306
boL (0045)	Braking Transistor Overload	Flashing	Alarm	331
boL (004F)	BrakingTransistor Overload Fault	Illuminated	Fault	306
brA (0071)	Brake Deterioration	Illuminated	Fault	306
brTC (0072)	During Brake Torque Check	-	Not an alarm.	331
bUS (0015)	Option Communication Error	Flashing	Alarm	331
bUS (0022)	Option Communication Error	Illuminated	Fault	306
bUSy	Busy	-	Not an alarm.	332
CALL (001D)	Serial Comm Transmission Error	Flashing	Alarm	332
CE (0014)	Modbus Communication Error	Flashing	Alarm	332
CE (0021)	Modbus Communication Error	Illuminated	Fault	307
CF (0025)	Control Fault	Illuminated	Fault	307
CPF00	Control Circuit Error	Illuminated	Fault	307
CPF01	Control Circuit Error	Illuminated	Fault	307
CPF02 (0083) CPF03 (0084)	Control Circuit Error	Illuminated	Fault	307, 307
CPF06 (0087)	Control Circuit Error (EEPROM Memory Data Error)	Illuminated	Fault	308
CPF07 (0088) CPF08 (0089)	Control Circuit Error	Illuminated	Fault	308, 308
CPF10 (009B) - CPF14 (008F)	Control Circuit Error	Illuminated	Fault	308 - 308
CPF16 (0091) - CPF23 (0098)	Control Circuit Error	Illuminated	Fault	309, 309
CPF24 (0099)	Control Circuit Error (Drive Unit Signal Fault)	Illuminated	Fault	309
CPF26 (009B) - CPF39 (00A8)	Control Circuit Error	Illuminated	Fault	310, 311
CPyE	Error Writing Data	-	Backup Function Runtime Error	347
CrST	Remove Up/Down Command to Reset	Flashing	Not an alarm.	332
CSEr	Control Mode Mismatch	-	Backup Function Runtime Error	347
CyPo (0029)	Cycle Power to Accept Changes	Flashing	Alarm	332
dEv (0011)	Speed Deviation	Flashing	Alarm	332
dEv (0019)	Speed Deviation	Illuminated	Fault	311
dFPS	Drive Model Mismatch	-	Backup Function Runtime Error	347
dv1 (0032)	Z Pulse Fault	Illuminated	Fault	311
dv2 (0033)	Z Pulse Noise Fault Detection	Illuminated	Fault	311
dv3 (0034)	Inversion Detection	Illuminated	Fault	312
dv4 (0035)	Inversion Prevention Detection	Illuminated	Fault	312

Display (Hex.)	Name	ALM LED	Type	Ref.
dv6 (0054)	Over Jerk	Illuminated	Fault	312
dv7 (005B)	Polarity Judge Timeout	Illuminated	Fault	313
dv8 (005D)	PM Rotor Position DetectionError	Illuminated	Fault	313
EF (0007)	Up/Down Command Input Error	Flashing	Alarm	333
EF0 (001A)	Option Card External Fault	Flashing	Alarm	333
EF0 (0027)	Option Card External Fault	Illuminated	Fault	313
EF3 (0009)	External Fault (Terminal S3)	Flashing	Alarm	333
EF3 (0011)	External Fault (Terminal S3)	Illuminated	Fault	313
EF4 (000A)	External Fault (Terminal S4)	Flashing	Alarm	333
EF4 (0012)	External Fault (Terminal S4)	Illuminated	Fault	313
EF5 (000B)	External Fault (Terminal S5)	Flashing	Alarm	333
EF5 (0013)	External Fault (Terminal S5)	Illuminated	Fault	314
EF6 (000C)	External Fault (Terminal S6)	Flashing	Alarm	333
EF6 (0014)	External Fault (Terminal S6)	Illuminated	Fault	314
EF7 (000D)	External Fault (Terminal S7)	Flashing	Alarm	333
EF7 (0015)	External Fault (Terminal S7)	Illuminated	Fault	314
EF8 (000E)	External Fault (Terminal S8)	Flashing	Alarm	334
EF8 (0016)	External Fault (Terminal S8)	Illuminated	Fault	314
EF9 (0023)	External Fault (Terminal S9)	Flashing	Alarm	334
EF9 (002C)	External Fault (Terminal S9)	Illuminated	Fault	314
EF10 (0024)	External Fault (Terminal S10)	Flashing	Alarm	334
EF10 (002D)	External Fault (Terminal S10)	Illuminated	Fault	314
End1	Excessive Rated Voltage Setting	Flashing	Auto-Tuning Error	343
End2	Iron Core Saturation Coefficient	Flashing	Auto-Tuning Error	343
End3	Rated Current Setting Alarm	Flashing	Auto-Tuning Error	343
End4	Adjusted Slip Calculation Error	Flashing	Auto-Tuning Error	343
End5	Resistance Tuning Error	Flashing	Auto-Tuning Error	343
End6	Leakage Inductance Alarm	Flashing	Auto-Tuning Error	343
End7	No-Load Current Alarm	Flashing	Auto-Tuning Error	343
End8	Rescue Operation Speed Warning	Flashing	Auto-Tuning Error	343
End9	Rescue Mag. Pole Search Warning	Flashing	Auto-Tuning Error	343
End10	Rescue Mag Pole Polarity Warning	Flashing	Auto-Tuning Error	344
EP24v (0081)	External Power 24V Supply	Flashing	Alarm	334
Er-01	Motor Data Error	Flashing	Auto-Tuning Error	344
Er-02	Drive in an Alarm State	Flashing	Auto-Tuning Error	344
Er-03	STOP Button was Pressed	Flashing	Auto-Tuning Error	344
Er-04	Line-to-Line Resistance Error	Flashing	Auto-Tuning Error	344
Er-05	No-Load Current Error	Flashing	Auto-Tuning Error	344
Er-08	Rated Slip Error	Flashing	Auto-Tuning Error	345
Er-09	Acceleration Error	Flashing	Auto-Tuning Error	345
Er-10	Motor Direction Error	Flashing	Auto-Tuning Error	345
Er-11	Motor Speed Error	Flashing	Auto-Tuning Error	345
Er-12	Current Detection Error	Flashing	Auto-Tuning Error	345
Er-13	Leakage Inductance Error	Flashing	Auto-Tuning Error	345
Er-14	Motor Speed Error 2	Flashing	Auto-Tuning Error	345
Er-18	Back EMF Error	Flashing	Auto-Tuning Error	346

Display (Hex.)	Name	ALM LED	Type	Ref.
Er-19	PM Inductance Error	Flashing	Auto-Tuning Error	346
Er-20	Stator Resistance Error	Flashing	Auto-Tuning Error	346
Er-21	Z Pulse Correction Error	Flashing	Auto-Tuning Error	346
Er-22	Initial Rotor Pole Search Error	Flashing	Auto-Tuning Error	346
Er-23	Encoder Offset Tuning Warning	Flashing	Auto-Tuning Error	346
Er-24	SINCOS Compatibility Error	Flashing	Auto-Tuning Error	346
Er-25	HighFreq Inject Param Tuning Err	Flashing	Auto-Tuning Error	346
Err (001F)	EEPROM Write Error	Illuminated	Fault	314
FAn (000F)	Internal Fan Fault	Flashing	Alarm	334
FAn (0017)	Internal Fan Fault	Illuminated	Fault	315
FAn1 (0413)	Drive Cooling Fan Fault	Illuminated	Fault	315
FrL (0059)	Speed Reference Missing	Illuminated	Fault	315
GF (0006)	Ground Fault	Illuminated	Fault	315
HCA (0034)	High Current Alarm	Flashing	Alarm	334
iFEr	Keypad Communication Error	-	Backup Function Runtime Error	347
L24v (0021)	Loss of External Power 24 Supply	Flashing	Alarm	335
LF (001C)	Output Phase Loss	Illuminated	Fault	315
LF2 (0036)	Output Current Imbalance	Illuminated	Fault	315
LoG	Com Error / Abnormal SD card	Flashing	Alarm	335
LT-1 (0035)	Cooling Fan Maintenance Time	Flashing	Alarm	335
LT-2 (0036)	Capacitor Maintenance Time	Flashing	Alarm	335
LT-3 (0043)	SoftChargeBypassRelay MainteTime	Flashing	Alarm	335
LT-4 (0044)	IGBT Maintenance Time	Flashing	Alarm	335
MCF (0464)	Input MC Failure	Illuminated	Fault	316
ndAT	Error Received Data	-	Backup Function Runtime Error	347
oC (0007)	Overcurrent	Illuminated	Fault	316
oFA00 (0101)	Option Not Compatible with Port	Illuminated	Fault	317
oFA01 (0102)	Option Fault/Connection Error	Illuminated	Fault	317
oFA02 (0103)	Duplicate Options	Illuminated	Fault	317
oFA03 (0104) - oFA06 (0107)	Option Card Error Occurred at Option Port (CN5-A)	Illuminated	Fault	317 - 317
oFA10 (0111) oFA11 (0112)	Option Card Error Occurred at Option Port (CN5-A)	Illuminated	Fault	317, 318
oFA12 (0113) - oFA17 (0118)	Option Card Connection Error (CN5-A)	Illuminated	Fault	318 - 318
oFA30 (0131) - oFA43 (013E)	Communication Option Card Connection Error (CN5-A)	Illuminated	Fault	318 - 320
oFb00 (0201)	Option Not Compatible with Port	Illuminated	Fault	320
oFb01 (0202)	Option Fault/Connection Error	Illuminated	Fault	320
oFb02 (0203)	Duplicate Options	Illuminated	Fault	320
oFb03 (0204) - oFb11 (0212)	Option Card Error Occurred at Option Port (CN5-B)	Illuminated	Fault	320 - 321
oFb12 (0213) - oFb17 (0218)	Option Card Connection Error (CN5-B)	Illuminated	Fault	321 - 321
oFC00 (0301)	Option Not Compatible with Port	Illuminated	Fault	322
oFC01 (0302)	Option Fault/Connection Error	Illuminated	Fault	322
oFC02 (0303)	Duplicate Options	Illuminated	Fault	322
oFC03 (0304) - oFC11 (0312)	Option Card Error Occurred at Option Port (CN5-C)	Illuminated	Fault	322 - 323
oFC12 (0313) - oFC17 (0318)	Option Card Connection Error (CN5-C)	Illuminated	Fault	323 - 323
oFC50 (0351) - oFC55 (0356)	Option Card Error Occurred at Option Port (CN5-C)	Illuminated	Fault	323 - 324
oH (0003)	Heatsink Overheat	Flashing	Alarm	335
oH (0009)	Heatsink Overheat	Illuminated	Fault	324

Display (Hex.)	Name	ALM LED	Type	Ref.
oH1 (000A)	Heatsink Overheat	Illuminated	Fault	324
oH3 (001D)	Motor Overheat (PTC Input)	Illuminated	Fault	324
oH3 (0022)	Motor Overheat (PTC Input)	Flashing	Alarm	336
oH4 (0020)	Motor Overheat Fault (PTC Input)	Illuminated	Fault	325
oL1 (000B)	Motor Overload	Illuminated	Fault	325
oL2 (000C)	Drive Overload	Illuminated	Fault	325
oL3 (0005)	Overtorque 1	Flashing	Alarm	336
oL3 (000D)	Overtorque Detection 1	Illuminated	Fault	326
oL4 (0006)	Overtorque 2	Flashing	Alarm	336
oL4 (000E)	Overtorque Detection 2	Illuminated	Fault	326
oPE01	Drive Capacity Setting Error	Flashing	Parameter Setting Error	340
oPE02	Parameter Range Setting Error	Flashing	Parameter Setting Error	340
oPE03	Multi-Function Input Setting Err	Flashing	Parameter Setting Error	340
oPE05	Run Cmd/Speed Ref Source Sel Err	Flashing	Parameter Setting Error	341
oPE06	Control Method Selection Error	Flashing	Parameter Setting Error	341
oPE07	Analog Input Selection Error	Flashing	Parameter Setting Error	341
oPE08	Parameter Selection Error	Flashing	Parameter Setting Error	341
oPE10	V/f Data Setting Error	Flashing	Parameter Setting Error	342
oPE16	Energy Saving Constants Error	Flashing	Parameter Setting Error	342
oPE18	Online Tuning Param Setting Err	Flashing	Parameter Setting Error	342
oPE20	PG-F3 Setting Error	Flashing	Parameter Setting Error	342
oPE21	Elevator Parameter Setting Fault	Flashing	Parameter Setting Error	342
oPr (001E)	Keypad Connection Fault	Illuminated	Fault	326
oS (0010)	Overspeed	Flashing	Alarm	336
oS (0018)	Overspeed	Illuminated	Fault	326
ov (0002)	DC Bus Overvoltage	Flashing	Alarm	336
ov (0008)	Overvoltage	Illuminated	Fault	326
ovEr	Too Many Parameters Changed	-	Not an alarm.	337
PASS	Modbus Communication Test	Flashing	Not an alarm.	337
PF (0047)	Input Phase Loss	Flashing	Alarm	337
PF (001B)	Input Phase Loss	Illuminated	Fault	327
PF5 (005E)	Rescue Power Supply Low Error	Illuminated	Fault	327
PGo (0012)	Encoder (PG) Feedback Loss	Flashing	Alarm	337
PGo (001A)	Encoder (PG) Feedback Loss	Illuminated	Fault	328
PGoH (002B)	Encoder (PG) Hardware Fault	Flashing	Alarm	337
PGoH (0038)	Encoder (PG) Hardware Fault	Illuminated	Fault	328
rdEr	Error Reading Data	-	Backup Function Runtime Error	347
rF (004E)	Braking Resistor Fault	Illuminated	Fault	328
rr (000F)	Dynamic Braking Transistor Fault	Illuminated	Fault	328
rUn (001B)	Motor Switch during Run	Flashing	Alarm	337
SC (0005)	Short Circuit/IGBT Failure	Illuminated	Fault	328
SCE (045E)	Short Circuit Brake Sequence Err	Illuminated	Fault	328
SCF (040F)	Safety Circuit Fault	Illuminated	Fault	328
SE (0020)	Modbus Test Mode Error	Flashing	Alarm	338
SE1 (0055)	Motor Contactor Response Error	Illuminated	Fault	328
SE2 (0056)	Starting Current Error	Illuminated	Fault	329

Display (Hex.)	Name	ALM LED	Type	Ref.
SE3 (0057)	Output Current Error	Illuminated	Fault	329
SE4 (0058)	Brake Response Error	Illuminated	Fault	329
SE8 (045D)	Sequence Error8	Illuminated	Fault	329
STo (003C)	Safe Torque OFF	-	Alarm	338
SToF (003B)	Safe Torque OFF	Flashing	Alarm	338
SvE (0026)	Zero Servo Fault	Illuminated	Fault	329
TCA (00D2)	TDCC Alarm	Flashing	Alarm	338
TCF (0459)	TDCC Fault	Illuminated	Fault	329
TCS (00D1)	TDCC Setup	Flashing	Alarm	338
TiM (0089)	Keypad Time Not Set	Flashing	Alarm	338
TiM (0401)	Keypad Time Not Set	Illuminated	Fault	329
UL3 (001E)	Undertorque Detection 1	Flashing	Alarm	338
UL3 (0029)	Undertorque Detection 1	Illuminated	Fault	330
UL4 (001F)	Undertorque Detection 2	Flashing	Alarm	339
UL4 (002A)	Undertorque Detection 2	Illuminated	Fault	330
Uv (0001)	Undervoltage	Flashing	Alarm	339
Uv1 (0002)	DC Bus Undervoltage	Illuminated	Fault	330
Uv2 (0003)	Control Power Undervoltage	Illuminated	Fault	330
Uv3 (0004)	Soft Charge Answerback Fault	Illuminated	Fault	330
vAEr	Voltage Class, Capacity Mismatch	-	Backup Function Runtime Error	347
vFyE	Parameters do not Match	-	Backup Function Runtime Error	347
voF (0041)	Output Voltage Detection Alarm	Flashing	Alarm	339

7.4 Fault

This section gives information about some of the causes and possible solutions of faults. You must use the Fault Reset operation to remove the fault before you can operate the drive. Use the information in this table to remove the cause of the fault.

Code	Name	Causes	Possible Solutions
bAT	Keypad Battery Low Voltage	The keypad battery voltage is low.	Replace the keypad battery.
Note: Set *o4-24 [bAT Detection Selection]* to enable and disable *bAT* detection.			
Code	**Name**	**Causes**	**Possible Solutions**
bCE	Bluetooth Communication Fault	The smartphone or tablet with DriveWizard Mobile installed is too far from the keypad.	Use the smartphone or tablet 10 m (32.8 ft) or nearer to the keypad. **Note:** *bCE* can occur when the smartphone or tablet is 10 m (32.8 ft) or nearer to the keypad depending on the specifications of the smartphone or tablet.
		Radio waves from a different device are causing interference with communications between the smartphone or tablet and keypad.	Make sure that no device around the keypad uses the same radio bandwidth (2400 MHz to 2480 MHz), and prevent radio interference.
Note: • The drive detects this fault when you use the Bluetooth LCD keypad and operate the drive with a smartphone or tablet. • Do a Fault Reset to clear the fault.			
Code	**Name**	**Causes**	**Possible Solutions**
boL	BrakingTransistor Overload Fault	The duty cycle of the braking transistor is high (the regeneration power or repetition frequency is high).	• Install a braking unit (CDBR series). • Install a regenerative converter. • Increase the deceleration time.
		You enabled the protective function for the braking transistor when you have a regenerative converter.	Set *L8-55 = 0 [Internal DB TransistorProtection = RF Disabled/ BOL Disabled]*.
		The braking transistor in the drive is broken.	Replace the entire drive.
Note: Do a Fault Reset to clear the fault.			
Code	**Name**	**Causes**	**Possible Solutions**
brA	Brake Deterioration	The amount of car movement became *S5-31 [Car Movement @ Brake T Check]* or larger during the brake torque check operation.	Check the *S5-31* setting.
Note: • The drive detects this fault if the amount of car movement became *S5-31* or larger during the brake torque check operation. • Do a Fault Reset to clear the fault.			
Code	**Name**	**Causes**	**Possible Solutions**
bUS	Option Communication Error	The drive did not receive a signal from the controller.	Correct wiring errors.
		The communications cable wiring is incorrect.	
		There is a short-circuit in the communications cable or the communications cable is not connected.	• Repair short circuits and connect cables. • Replace the defective communications cable.
		Electrical interference caused a communication data error.	• Examine the control circuit lines, main circuit lines, and ground wiring, and decrease the effects of electrical interference. • Make sure that a magnetic contactor is not the source of the electrical interference, then use a Surge Protective Device if necessary. • Use only the recommended cables or other shielded line. Ground the shield on the controller side or the drive input power side. • Separate the communication wiring from drive power lines, and install a noise filter to the input side of the power supply for communication. • Decrease the effects of electrical interference from the controller.
		The option is incorrectly installed to the drive.	Correctly install the option to the drive.
		The option is damaged.	If the fault continues and the wiring is correct, replace the option.
Note: • The drive detects this fault if the Up/Down command or speed reference is assigned to the option card. • Do a Fault Reset to clear the fault. • If the drive detects this fault, it will operate the motor as specified by the stopping method set in *F6-01 [Communication Error Selection]*.			

Code	Name	Causes	Possible Solutions
CE	Modbus Communication Error	The communications cable wiring is incorrect.	Correct wiring errors.
		There is a short-circuit in the communications cable or the communications cable is not connected.	• Repair short circuits and connect cables. • Replace the defective communications cable.
		Electrical interference caused a communication data error.	• Examine the control circuit lines, main circuit lines, and ground wiring, and decrease the effects of electrical interference. • Make sure that a magnetic contactor is not the source of the electrical interference, then use a Surge Protective Device if necessary. • Use only the recommended cables or other shielded line. Ground the shield on the controller side or the drive input power side. • Separate the communication wiring from drive power lines, and install a noise filter to the input side of the power supply for communication. • Decrease the effects of electrical interference from the controller.

Note:
• The drive detects this fault if it does not correctly receive control data for the *CE* detection time set to *H5-09 [CE Detection Time]*.
• Do a Fault Reset to clear the fault.
• If the drive detects this fault, it will operate the motor as specified by the stopping method set in *H5-04 [Communication Error Stop Method]*.

Code	Name	Causes	Possible Solutions
CF	Control Fault	Motor parameters are set incorrectly	Correctly set the motor parameters and do Auto-Tuning again.
		The value set in the torque limit is too small.	Adjust *L7-01 to L7-04 [Torque Limit]*.
		The load inertia is too large.	• Adjust *C1-02, C1-04, C1-06, and C1-08 [Deceleration Ramps]*. • Set the speed reference to the minimum output frequency, and stop the Up/Down command when the drive stops deceleration.
		The drive is trying to ramp to stop a machine that cannot do ramp to stop or on a machine for which deceleration is not necessary.	Correctly set *b1-03 [Stopping Method Selection]*.
		The motor and drive are connected incorrectly.	Correct wiring errors.
		The drive received an Up/Down command while the motor was coasting.	Examine the sequence and input the Up/Down command after the motor fully stops.

Note:
• The drive detects this fault if the torque reference is more than the torque limit for 3 seconds or longer while the drive ramps to stop.
• Do a Fault Reset to clear the fault.

Code	Name	Causes	Possible Solutions
CPF00	Control Circuit Error	A drive hardware problem occurred.	• Re-energize the drive. • If the fault stays, replace the control board or the drive. Contact Yaskawa or your nearest sales representative to replace the control board.

Note:
• Do a Fault Reset to clear the fault.
• Fault trace is not available for these faults.

Code	Name	Causes	Possible Solutions
CPF01	Control Circuit Error	A drive hardware problem occurred.	• Re-energize the drive. • If the fault stays, replace the control board or the drive. Contact Yaskawa or your nearest sales representative to replace the control board.

Note:
• Do a Fault Reset to clear the fault.
• Fault trace is not available for these faults.

Code	Name	Causes	Possible Solutions
CPF02	Control Circuit Error	A drive hardware problem occurred.	• Re-energize the drive. • If the fault stays, replace the control board or the drive. Contact Yaskawa or your nearest sales representative to replace the control board.

Note:
• Do a Fault Reset to clear the fault.
• Fault trace is not available for these faults.

Code	Name	Causes	Possible Solutions
CPF03	Control Circuit Error	A drive hardware problem occurred.	• Re-energize the drive. • If the fault stays, replace the control board or the drive. Contact Yaskawa or your nearest sales representative to replace the control board.

Note:
• Do a Fault Reset to clear the fault.
• Fault trace is not available for these faults.

Code	Name	Causes	Possible Solutions
CPF06	Control Circuit Error (EEPROM Memory Data Error)	The drive power supply was de-energized while a communication option entered a parameter Write command.	Set *A1-03 = 2220 [Initialize Parameters = 2-Wire Initialization]* and initialize the drive.
		An EEPROM peripheral circuit error occurred.	• Re-energize the drive. • If the fault stays, replace the control board or the drive. Contact Yaskawa or your nearest sales representative to replace the control board.
Note: • The drive detects this fault if there is an error in the data written to the drive EEPROM. • Do a Fault Reset to clear the fault. • Fault trace is not available for these faults.			

Code	Name	Causes	Possible Solutions
CPF07	Control Circuit Error	A drive hardware problem occurred.	• Re-energize the drive. • If the fault stays, replace the control board or the drive. Contact Yaskawa or your nearest sales representative to replace the board.
Note: • Do a Fault Reset to clear the fault. • Fault trace is not available for these faults.			

Code	Name	Causes	Possible Solutions
CPF08	Control Circuit Error	A drive hardware problem occurred.	• Re-energize the drive. • If the fault stays, replace the control board or the drive. Contact Yaskawa or your nearest sales representative to replace the control board.
Note: • Do a Fault Reset to clear the fault. • Fault trace is not available for these faults.			

Code	Name	Causes	Possible Solutions
CPF10	Control Circuit Error	A drive hardware problem occurred.	• Re-energize the drive. • If the fault stays, replace the control board or the drive. Contact Yaskawa or your nearest sales representative to replace the control board.
Note: • Do a Fault Reset to clear the fault. • Fault trace is not available for these faults.			

Code	Name	Causes	Possible Solutions
CPF11	Control Circuit Error	A drive hardware problem occurred.	• Re-energize the drive. • If the fault stays, replace the control board or the drive. Contact Yaskawa or your nearest sales representative to replace the control board.
Note: • Do a Fault Reset to clear the fault. • Fault trace is not available for these faults.			

Code	Name	Causes	Possible Solutions
CPF12	Control Circuit Error	A drive hardware problem occurred.	• Re-energize the drive. • If the fault stays, replace the control board or the drive. Contact Yaskawa or your nearest sales representative to replace the control board.
Note: • Do a Fault Reset to clear the fault. • Fault trace is not available for these faults.			

Code	Name	Causes	Possible Solutions
CPF13	Control Circuit Error	A drive hardware problem occurred.	• Re-energize the drive. • If the fault stays, replace the control board or the drive. Contact Yaskawa or your nearest sales representative to replace the control board.
Note: • Do a Fault Reset to clear the fault. • Fault trace is not available for these faults.			

Code	Name	Causes	Possible Solutions
CPF14	Control Circuit Error	A drive hardware problem occurred.	• Re-energize the drive. • If the fault stays, replace the control board or the drive. Contact Yaskawa or your nearest sales representative to replace the control board.
Note: • Do a Fault Reset to clear the fault. • Fault trace is not available for these faults.			

Code	Name	Causes	Possible Solutions
CPF16	Control Circuit Error	A drive hardware problem occurred.	• Re-energize the drive. • If the fault stays, replace the control board or the drive. Contact Yaskawa or your nearest sales representative to replace the control board.

Note:
• Do a Fault Reset to clear the fault.
• Fault trace is not available for these faults.

Code	Name	Causes	Possible Solutions
CPF17	Control Circuit Error	A drive hardware problem occurred.	• Re-energize the drive. • If the fault stays, replace the control board or the drive. Contact Yaskawa or your nearest sales representative to replace the control board.

Note:
• Do a Fault Reset to clear the fault.
• Fault trace is not available for these faults.

Code	Name	Causes	Possible Solutions
CPF18	Control Circuit Error	A drive hardware problem occurred.	• Re-energize the drive. • If the fault stays, replace the control board or the drive. Contact Yaskawa or your nearest sales representative to replace the control board.

Note:
• Do a Fault Reset to clear the fault.
• Fault trace is not available for these faults.

Code	Name	Causes	Possible Solutions
CPF19	Control Circuit Error	A drive hardware problem occurred.	• Re-energize the drive. • If the fault stays, replace the control board or the drive. Contact Yaskawa or your nearest sales representative to replace the control board.

Note:
• Do a Fault Reset to clear the fault.
• Fault trace is not available for these faults.

Code	Name	Causes	Possible Solutions
CPF20	Control Circuit Error	A drive hardware problem occurred.	• Re-energize the drive. • If the fault stays, replace the control board or the drive. Contact Yaskawa or your nearest sales representative to replace the control board.

Note:
• Do a Fault Reset to clear the fault.
• Fault trace is not available for these faults.

Code	Name	Causes	Possible Solutions
CPF21	Control Circuit Error	A drive hardware problem occurred.	• Re-energize the drive. • If the fault stays, replace the control board or the drive. Contact Yaskawa or your nearest sales representative to replace the control board.

Note:
• Do a Fault Reset to clear the fault.
• Fault trace is not available for these faults.

Code	Name	Causes	Possible Solutions
CPF22	Control Circuit Error	A drive hardware problem occurred.	• Re-energize the drive. • If the fault stays, replace the control board or the drive. Contact Yaskawa or your nearest sales representative to replace the control board.

Note:
• Do a Fault Reset to clear the fault.
• Fault trace is not available for these faults.

Code	Name	Causes	Possible Solutions
CPF23	Control Circuit Error	A drive hardware problem occurred.	• Re-energize the drive. • If the fault stays, replace the control board or the drive. Contact Yaskawa or your nearest sales representative to replace the control board.

Note:
• Do a Fault Reset to clear the fault.
• Fault trace is not available for these faults.

Code	Name	Causes	Possible Solutions
CPF24	Control Circuit Error (Drive Unit Signal Fault)	A drive hardware problem occurred.	• Re-energize the drive. • If the fault stays, replace the control board or the drive. Contact Yaskawa or your nearest sales representative to replace the control board.

Note:
• Do a Fault Reset to clear the fault.
• Fault trace is not available for these faults.

Code	Name	Causes	Possible Solutions
CPF26	Control Circuit Error	A drive hardware problem occurred.	• Re-energize the drive. • If the fault stays, replace the control board or the drive. Contact Yaskawa or your nearest sales representative to replace the control board.
Note: • Do a Fault Reset to clear the fault. • Fault trace is not available for these faults.			
Code	**Name**	**Causes**	**Possible Solutions**
CPF27	Control Circuit Error	A drive hardware problem occurred.	• Re-energize the drive. • If the fault stays, replace the control board or the drive. Contact Yaskawa or your nearest sales representative to replace the control board.
Note: • Do a Fault Reset to clear the fault. • Fault trace is not available for these faults.			
Code	**Name**	**Causes**	**Possible Solutions**
CPF28	Control Circuit Error	A drive hardware problem occurred.	• Re-energize the drive. • If the fault stays, replace the control board or the drive. Contact Yaskawa or your nearest sales representative to replace the control board.
Note: • Do a Fault Reset to clear the fault. • Fault trace is not available for these faults.			
Code	**Name**	**Causes**	**Possible Solutions**
CPF29	Control Circuit Error	A drive hardware problem occurred.	• Re-energize the drive. • If the fault stays, replace the control board or the drive. Contact Yaskawa or your nearest sales representative to replace the control board.
Note: • Do a Fault Reset to clear the fault. • Fault trace is not available for these faults.			
Code	**Name**	**Causes**	**Possible Solutions**
CPF30	Control Circuit Error	A drive hardware problem occurred.	• Re-energize the drive. • If the fault stays, replace the control board or the drive. Contact Yaskawa or your nearest sales representative to replace the control board.
Note: • Do a Fault Reset to clear the fault. • Fault trace is not available for these faults.			
Code	**Name**	**Causes**	**Possible Solutions**
CPF31	Control Circuit Error	A drive hardware problem occurred.	• Re-energize the drive. • If the fault stays, replace the control board or the drive. Contact Yaskawa or your nearest sales representative to replace the control board.
Note: • Do a Fault Reset to clear the fault. • Fault trace is not available for these faults.			
Code	**Name**	**Causes**	**Possible Solutions**
CPF32	Control Circuit Error	A drive hardware problem occurred.	• Re-energize the drive. • If the fault stays, replace the control board or the drive. Contact Yaskawa or your nearest sales representative to replace the control board.
Note: • Do a Fault Reset to clear the fault. • Fault trace is not available for these faults.			
Code	**Name**	**Causes**	**Possible Solutions**
CPF33	Control Circuit Error	A drive hardware problem occurred.	• Re-energize the drive. • If the fault stays, replace the control board or the drive. Contact Yaskawa or your nearest sales representative to replace the control board.
Note: • Do a Fault Reset to clear the fault. • Fault trace is not available for these faults.			
Code	**Name**	**Causes**	**Possible Solutions**
CPF34	Control Circuit Error	A drive hardware problem occurred.	• Re-energize the drive. • If the fault stays, replace the control board or the drive. Contact Yaskawa or your nearest sales representative to replace the control board.
Note: • Do a Fault Reset to clear the fault. • Fault trace is not available for these faults.			

Code	Name	Causes	Possible Solutions
CPF35	Control Circuit Error	A drive hardware problem occurred.	• Re-energize the drive. • If the fault stays, replace the control board or the drive. Contact Yaskawa or your nearest sales representative to replace the control board.

Note:
• Do a Fault Reset to clear the fault.
• Fault trace is not available for these faults.

Code	Name	Causes	Possible Solutions
CPF36	Control Circuit Error	A drive hardware problem occurred.	• Re-energize the drive. • If the fault stays, replace the control board or the drive. Contact Yaskawa or your nearest sales representative to replace the control board.

Note:
• Do a Fault Reset to clear the fault.
• Fault trace is not available for these faults.

Code	Name	Causes	Possible Solutions
CPF37	Control Circuit Error	A drive hardware problem occurred.	• Re-energize the drive. • If the fault stays, replace the control board or the drive. Contact Yaskawa or your nearest sales representative to replace the control board.

Note:
• Do a Fault Reset to clear the fault.
• Fault trace is not available for these faults.

Code	Name	Causes	Possible Solutions
CPF38	Control Circuit Error	A drive hardware problem occurred.	• Re-energize the drive. • If the fault stays, replace the control board or the drive. Contact Yaskawa or your nearest sales representative to replace the control board.

Note:
• Do a Fault Reset to clear the fault.
• Fault trace is not available for these faults.

Code	Name	Causes	Possible Solutions
CPF39	Control Circuit Error	A drive hardware problem occurred.	• Re-energize the drive. • If the fault stays, replace the control board or the drive. Contact Yaskawa or your nearest sales representative to replace the control board.

Note:
• Do a Fault Reset to clear the fault.
• Fault trace is not available for these faults.

Code	Name	Causes	Possible Solutions
dEv	Speed Deviation	The load is too heavy.	Decrease the load.
		Acceleration and deceleration ramps are set too short.	Increase the values set in *C1-01 to C1-08 [Acceleration/ Deceleration Ramps]*.
		The *dEv* detection level settings are incorrect.	Adjust *F1-10 [Speed Deviation Detection Level]* and *F1-11 [Speed Deviation Detect DelayTime]*.
		The load is locked up.	Examine the machine.
		The holding brake is stopping the motor.	Release the holding brake.

Note:
• The drive detects this fault if the difference between the detected speed and the speed reference is more than the setting of *F1-10* for longer than *F1-11*.
• Do a Fault Reset to clear the fault.
• If the drive detects this fault, it will operate the motor as specified by the stopping method set in *F1-04 [Speed Deviation Detection Select]*.

Code	Name	Causes	Possible Solutions
dv1	Z Pulse Fault	There is damage to the encoder option card or the encoder on the motor side.	1. Repair wiring errors and connect disconnected wires. Correctly ground the shielded wire of the encoder cable. 2. Re-energize the drive. 3. If the fault stays, replace the control board or the drive. Contact Yaskawa or your nearest sales representative to replace the control board.
		The encoder cable is disconnected or wired incorrectly.	

Note:
• The drive detects this fault if it does not detect a Z pulse during one motor rotation.
• Do a Fault Reset to clear the fault.

Code	Name	Causes	Possible Solutions
dv2	Z Pulse Noise Fault Detection	Noise interference in the encoder cable.	Isolate the encoder cable from the drive output line or a different source of electrical interference.
		The encoder cable is disconnected or wired incorrectly.	Examine for wiring errors or disconnected wires in the encoder cable, and repair problems. Correctly ground the shielded wire of the encoder cable.

Code	Name	Causes	Possible Solutions
		There is damage to the encoder option card or the encoder on the motor side.	Repair the wiring and re-energize the drive, then replace the encoder option card or the encoder if the problem continues.

Note:
• The drive detects this fault if it detects more than one Z pulse per rotation for more than 10 times.
• Do a Fault Reset to clear the fault.

Code	Name	Causes	Possible Solutions
dv3	Inversion Detection	*E5-11 [Encoder Z-Pulse Offset]* is set incorrectly.	Correctly set the value for Δθ to *E5-11* as specified by the values on the motor nameplate.
		There is a new encoder or the motor rotation direction changed.	Do Z Pulse Offset Tuning.
		An external force on the load side rotated the motor.	• Make sure that the motor is rotating in the correct direction. • Find and repair problems on the load side that cause the motor to rotate from the load side.
		Noise interference in the encoder cable.	Correctly ground the shielded wire of the encoder cable.
		The encoder cable is disconnected or wired incorrectly.	Examine for wiring errors or disconnected wires in the encoder cable, and repair problems.
		The setting for *F1-05 [Encoder 1 Rotation Selection]* is the opposite of the direction of motor rotation.	Correctly connect the motor wiring for each phase (U, V, W).
		The drive incorrectly detected the motor magnetic pole position.	When *U6-57 [PolePolarityDeterVal] < 819*, increase *n8-84 [Polarity Detection Current]*. Consult the motor manufacturer for information about maximum setting values.
		The setting of *n8-84* is too low.	Increase *n8-84* from the default. Consult the motor manufacturer for information about maximum setting values.
		Pole Position Detection failed.	If you are using an IPM motor, do High Frequency Injection Auto-Tuning.
		There is damage to the encoder option card or the encoder on the motor side.	Repair the wiring and re-energize the drive, then replace the encoder option card or the encoder if the problem continues.
		The drive incorrectly detected the motor magnetic pole position.	When *U6-57 < 819*, increase *n8-84* from the default.

Note:
• The drive detects this fault if:
–the torque reference and acceleration are in opposite directions.
–the speed reference and actual motor speed are more than 30% different for the number of times set to *F1-18 [Deviation 3 Detection Selection]*.
• Do a Fault Reset to clear the fault.

Code	Name	Causes	Possible Solutions
dv4	Inversion Prevention Detection	An external force on the load side rotated the motor.	• Make sure that the motor is rotating in the correct direction. • Find and repair problems on the load side that cause the motor to rotate from the load side. • Disable detection of this fault for applications that rotate the motor from the load side in the opposite direction of the speed reference. The drive will not detect this fault if *F1-19 = 0 [Deviation 4 Detection Selection = Disabled]*.
		E5-11 [Encoder Z-Pulse Offset] is set incorrectly.	Correctly set the value for Δθ to *E5-11* as specified by the values on the motor nameplate.
		There is a new encoder or the motor rotation direction changed.	Do Z Pulse Offset Tuning.
		Noise interference in the encoder cable.	Correctly ground the shielded wire of the encoder cable.
		The encoder cable is disconnected or wired incorrectly.	Examine for wiring errors or disconnected wires in the encoder cable, and repair problems.
		The drive incorrectly detected the motor magnetic pole position.	When *U6-57 [PolePolarityDeterVal] < 819*, increase *n8-84 [Polarity Detection Current]*. Consult the motor manufacturer for information about maximum setting values.
		The setting of *n8-84* is too low.	Increase *n8-84* from the default. Consult the motor manufacturer for information about maximum setting values.
		Pole Position Detection failed.	If you are using an IPM motor, do High Frequency Injection Auto-Tuning.
		There is damage to the encoder option card or the encoder on the motor side.	Repair the wiring and re-energize the drive, then replace the encoder option card or the encoder if the problem continues.

Note:
• The drive detects this fault if the pulses in the opposite direction of the speed reference are more than the value set in *F1-19*.
• Do a Fault Reset to clear the fault.

Code	Name	Causes	Possible Solutions
dv6	Over Jerk	There is a disconnection in the motor coil winding. *E5-11 [Encoder Z-Pulse Offset]* is set incorrectly.	Correctly set the value for Δθ to *E5-11* as specified by the values on the motor nameplate.
		Noise interference in the encoder cable.	Correctly ground the shielded wire of the encoder cable.
		The encoder cable is disconnected or wired incorrectly.	Examine for wiring errors or disconnected wires in the encoder cable, and repair problems.

Code	Name	Causes	Possible Solutions
		There is damage to the encoder option card or the encoder on the motor side.	Repair the wiring and re-energize the drive, then replace the encoder option card or the encoder if the problem continues.
		When *A1-02 = 7 [Control Method Selection = CLV/PM]*, the motor data set in the *E5-xx [PM Motor Settings]* parameters are incorrect.	Refer to the motor nameplate or test report and set *E5-xx* correctly.
		The acceleration is too fast.	Check and adjust the acceleration rate and the jerk at acceleration start set in *C2-01 [Jerk @ Start of Accel]*.
		Parameters *o1-20, o1-21, o1-22* are set incorrectly.	Set *o1-20, o1-21, o1-22* correctly.

Note:
• The drive detects this fault if the acceleration rate of the elevator car is more than the value set in *S6-10 [Overacceleration Detection Level]*.
• Do a Fault Reset to clear the fault.

Code	Name	Causes	Possible Solutions
dv7	Polarity Judge Timeout	Battery voltage is too low.	Charge the battery.
		The output cable is disconnected.	Examine for wiring errors or disconnected wires in the encoder cable, and repair problems.
		There is a disconnection in the motor coil winding.	Measure the motor line-to-line resistance and replace the motor if a coil is disconnected.
		The screws on the drive output terminals are loose.	Tighten the terminal screws to the correct tightening torque.

Note:
• The drive detects this fault if it cannot detect polarity in a pre-set length of time.
• Do a Fault Reset to clear the fault.

Code	Name	Causes	Possible Solutions
dv8	PM Rotor Position DetectionError	Motor characteristics changed.	• Do the setup process again. • Do Stationary Auto-Tuning or Initial Pole Search Auto-Tuning.
		Parameters that control Initial Pole Search are set incorrectly (set up may be incomplete).	
		Parameters for the motor encoder are set to the wrong values (set up may be incomplete).	
		The brake released during Initial Pole Search or during power loss.	• Examine the brake sequence. • You must keep the brake applied during Initial Pole Search and when there is an interruption of the power supply.
		You cannot do Initial Pole Search on the motor.	Use an encoder option card that is compatible with both the drive and an absolute encoder.

Note:
• The drive detects this fault if the value from Initial Pole Search was invalid.
• Do a Fault Reset to clear the fault.
• Set *n8-86 [Pole Search Error Detection Sel]* to enable and disable *dv8* detection.

Code	Name	Causes	Possible Solutions
EF0	Option Card External Fault	The communication option card received an external fault from the controller.	1. Find the device that caused the external fault and remove the cause. 2. Clear the external fault input from the controller.
		A programming error occurred on the controller side.	Examine the operation of the controller program.

Note:
• The drive detects this fault if the alarm function on the external device side is operating.
• Do a Fault Reset to clear the fault.
• If the drive detects this fault, it will operate the motor as specified by the stop method set in *F6-03 [Comm External Fault (EF0) Select]*.

Code	Name	Causes	Possible Solutions
EF3	External Fault (Terminal S3)	MFDI terminal S3 caused an external fault through an external device.	1. Find the device that caused the external fault and remove the cause. 2. Clear the external fault input in the MFDI.
		The wiring is incorrect.	Correctly connect the signal line to MFDI terminal S3.
		External Fault [H1-03 = 20 to 2F] is set to MFDI terminal S3, but the terminal is not in use.	Correctly set the MFDI.

Note:
Do a Fault Reset to clear the fault.

Code	Name	Causes	Possible Solutions
EF4	External Fault (Terminal S4)	MFDI terminal S4 caused an external fault through an external device.	1. Find the device that caused the external fault and remove the cause. 2. Clear the external fault input in the MFDI.
		The wiring is incorrect.	Correctly connect the signal line to MFDI terminal S4.
		External Fault [H1-04 = 20 to 2F] is set to MFDI terminal S4, but the terminal is not in use.	Correctly set the MFDI.

Note:
Do a Fault Reset to clear the fault.

Code	Name	Causes	Possible Solutions
EF5	External Fault (Terminal S5)	MFDI terminal S5 caused an external fault through an external device.	1. Find the device that caused the external fault and remove the cause. 2. Clear the external fault input in the MFDI.
		The wiring is incorrect.	Correctly connect the signal line to MFDI terminal S5.
		External Fault [H1-05 = 20 to 2F] is set to MFDI terminal S5, but the terminal is not in use.	Correctly set the MFDI.
Note: Do a Fault Reset to clear the fault.			

Code	Name	Causes	Possible Solutions
EF6	External Fault (Terminal S6)	MFDI terminal S6 caused an external fault through an external device.	1. Find the device that caused the external fault and remove the cause. 2. Clear the external fault input in the MFDI.
		The wiring is incorrect.	Correctly connect the signal line to MFDI terminal S6.
		External Fault [H1-06 = 20 to 2F] is set to MFDI terminal S6, but the terminal is not in use.	Correctly set the MFDI.
Note: Do a Fault Reset to clear the fault.			

Code	Name	Causes	Possible Solutions
EF7	External Fault (Terminal S7)	MFDI terminal S7 caused an external fault through an external device.	1. Find the device that caused the external fault and remove the cause. 2. Clear the external fault input in the MFDI.
		The wiring is incorrect.	Correctly connect the signal line to MFDI terminal S7.
		External Fault [H1-07 = 20 to 2F] is set to MFDI terminal S7, but the terminal is not in use.	Correctly set the MFDI.
Note: Do a Fault Reset to clear the fault.			

Code	Name	Causes	Possible Solutions
EF8	External Fault (Terminal S8)	MFDI terminal S8 caused an external fault through an external device.	1. Find the device that caused the external fault and remove the cause. 2. Clear the external fault input in the MFDI.
		The wiring is incorrect.	Correctly connect the signal line to MFDI terminal S8.
		External Fault [H1-08 = 20 to 2F] is set to MFDI terminal S8, but the terminal is not in use.	Correctly set the MFDI.
Note: Do a Fault Reset to clear the fault.			

Code	Name	Causes	Possible Solutions
EF9	External Fault (Terminal S9)	MFDI terminal S9 caused an external fault through an external device.	1. Find the device that caused the external fault and remove the cause. 2. Clear the external fault input in the MFDI.
		The wiring is incorrect.	Correctly connect the signal line to MFDI terminal S9.
		External Fault [H1-09 = 20 to 2F] is set to MFDI terminal S9, but the terminal is not in use.	Correctly set the MFDI.
Note: Do a Fault Reset to clear the fault.			

Code	Name	Causes	Possible Solutions
EF10	External Fault (Terminal S10)	MFDI terminal S10 caused an external fault through an external device.	1. Find the device that caused the external fault and remove the cause. 2. Clear the external fault input in the MFDI.
		The wiring is incorrect.	Correctly connect the signal line to MFDI terminal S10.
		External Fault [H1-10 = 20 to 2F] is set to MFDI terminal S10, but the terminal is not in use.	Correctly set the MFDI.
Note: Do a Fault Reset to clear the fault.			

Code	Name	Causes	Possible Solutions
Err	EEPROM Write Error	There was a problem with the EEPROM hardware.	• Re-energize the drive. • If the fault stays, replace the control board or the drive. Contact Yaskawa or your nearest sales representative to replace the control board.
		Electrical interference corrupted the data while it was writing to the EEPROM of the drive.	• Push the ENTER Key. • Set the parameters again.
Note: Do a Fault Reset to clear the fault.			

Code	Name	Causes	Possible Solutions
FAn	Internal Fan Fault	The circulation fan stopped operating correctly.	• Examine circulation fan operation. • Re-energize the drive. • Examine *U4-03 [Cooling Fan Ope Time]* and *U4-04 [Cool Fan Maintenance]*. If the performance life of the circulation fan is expired or if there is damage to the fan, replace the fan.

Note:
Do a Fault Reset to clear the fault.

Code	Name	Causes	Possible Solutions
FAn1	Drive Cooling Fan Fault	The cooling fan stopped operating correctly.	• Examine cooling fan operation. • Re-energize the drive. • Examine *U4-03 [Cooling Fan Ope Time]* and *U4-04 [Cool Fan Maintenance]*. If the performance life of the cooling fan is expired or if there is damage to the fan, replace the fan.
		The circulation fan is damaged.	• Examine circulation fan operation. • Re-energize the drive. • Examine *U4-03 [Cooling Fan Ope Time]* and *U4-04 [Cool Fan Maintenance]*. If the performance life of the circulation fan is expired or if there is damage to the fan, replace the fan.

Note:
Do a Fault Reset to clear the fault.

Code	Name	Causes	Possible Solutions
FrL	Speed Reference Missing	The drive received an Up/Down command when *d1-18 = 1 [Speed Reference Selection Mode = High speed has priority]*, *H1-xx ≠ 53 [MFDI Function Selection ≠ Leveling Speed]*, and no speed is selected at start.	• Examine the settings for *d1-18* and *H1-03 to H1-10 [Terminal S3 to S10 Function Selection]* to make sure that the selected speed selection method aligns with the elevator controller sequence. • Make sure that the elevator controller is connected correctly. • Make sure that the elevator controller selects the speed correctly.

Note:
• The drive detects this fault if you enter an Up/Down command when *d1-18 = 1*, *H1-xx ≠ 53*, and no speed is selected at start.
• Do a Fault Reset to clear the fault.

Code	Name	Causes	Possible Solutions
GF	Ground Fault	Overheating caused damage to the motor or the motor insulation is not satisfactory.	Measure the motor insulation resistance, and replace the motor if there is electrical conduction or unserviceable insulation.
		The motor main circuit cable is contacting ground to make a short circuit.	• Examine the motor main circuit cable for damage, and repair short circuits. • Measure the resistance between the motor main circuit cable and the ground terminal. If there is electrical conduction, replace the cable.
		An increase in the stray capacitance of the cable and the ground terminal caused an increase in the leakage current.	• If the wiring length of the cable is more than 100 m, decrease the carrier frequency. • Decrease the stray capacitance.
		A drive hardware problem occurred.	Replace the control board or the drive. Contact Yaskawa or your nearest sales representative to replace the control board.

Note:
• The drive detects this fault if a current short to ground was more than 50% of rated current on the output side of the drive.
• Do a Fault Reset to clear the fault.

Code	Name	Causes	Possible Solutions
LF	Output Phase Loss	The motor main circuit cable is disconnected.	Connect motor main circuit cable wiring and correct wiring errors in the main circuit drive input power.
		There is a disconnection in the motor coil winding.	Measure the motor line-to-line resistance and replace the motor if a coil is disconnected.
		The screws on the drive output terminals are loose.	Tighten the terminal screws to the correct tightening torque.
		The rated output current of the motor is less than 5% of the continuous rated output current of the drive.	Examine the drive capacity or the motor output to be applied.
		You are trying to use a single-phase motor.	The drive cannot operate a single-phase motor.
		The output transistor in the drive is damaged.	• Re-energize the drive. • If the fault stays, replace the control board or the drive. Contact Yaskawa or your nearest sales representative to replace the control board.

Note:
• The drive detects this fault if phase loss occurs on the output side of the drive.
• Do a Fault Reset to clear the fault.
• Set *L8-07 [Output Phase Loss Protection Sel]* to enable and disable *LF* detection.

Code	Name	Causes	Possible Solutions
LF2	Output Current Imbalance	There is phase loss in the wiring on the output side of the drive.	Examine for wiring errors or disconnected wires on the output side of the drive, and repair problems.
		The screws on the drive output terminals are loose.	Tighten the terminal screws to the correct tightening torque.

Code	Name	Causes	Possible Solutions
		There is not balance between the three phases of the PM motor impedance.	• Measure the Line-to-Line Resistance for each motor phase and make sure that resistance is equal in the three phases, and that all wires are connected correctly. • Replace the motor.
		The drive output circuit is broken.	• Re-energize the drive. • If the fault stays, replace the control board or the drive. Contact Yaskawa or your nearest sales representative to replace the control board.

Note:
• The drive detects this fault if there is not balance between the three phases of the output current from the PM motor.
• Do a Fault Reset to clear the fault.

Code	Name	Causes	Possible Solutions
MCF	Input MC Failure	There is a problem with the standby mode magnetic contactor (MC) installed on the primary side (the input side).	Replace the standby mode magnetic contactor (MC) installed on the primary side (the input side).
		There is a problem with the multi-function output.	Replace the control circuit terminal board.

Note:
The drive detects this fault if the main circuit power supply voltage did not return to normal in 5 seconds after the standby mode return command was input.

Code	Name	Causes	Possible Solutions
oC	Overcurrent	The load is too large.	• Measure the current flowing into the motor. • Replace the drive with a larger capacity model if the current value is more than the continuous rated output current of the drive. • Decrease the load or replace with a larger drive to prevent sudden changes in the current level.
		Overheating caused damage to the motor or the motor insulation is not satisfactory.	Measure the motor insulation resistance, and replace the motor if there is electrical conduction or unserviceable insulation.
		The motor main circuit cable is contacting ground to make a short circuit.	• Examine the motor main circuit cable for damage, and repair short circuits. • Measure the resistance between the motor main circuit cable and the ground terminal. If there is electrical conduction, replace the cable.
		A short circuit or ground fault on the drive output side caused damage to the output transistor of the drive.	• Make sure that there is not a short circuit in terminal B1 and terminals U/T1, V/T2, and W/T3. Make sure that there is not a short circuit in terminals - and terminals U/T1, V/T2, and W/T3. • If there is a short circuit, contact Yaskawa or your nearest sales representative.
		The acceleration ramp is too fast.	• Calculate the torque necessary during acceleration related to the load inertia and the specified acceleration ramp. • Increase the values set in *C1-01, C1-03, C1-05, or C1-07 [Acceleration Ramps]* to get the necessary torque. • Increase the values set in *C2-01 to C2-04 [Jerk Characteristics]* to get the necessary torque. • Replace the drive with a larger capacity model.
		The drive is trying to operate a specialized motor or a motor that is larger than the maximum applicable motor output of the drive.	• Examine the motor nameplate, the motor, and the drive to make sure that the continuous rated current of the drive is larger than the motor rated current. • Replace the drive with a larger capacity model.
		A magnetic contactor was switched at the output.	Set the operation sequence to not turn ON or OFF the magnetic contactor while the drive is outputting voltage.
		The V/f pattern settings are incorrect.	• Examine the ratios between the V/f pattern frequency and voltage. Decrease the voltage if it is too high compared to the frequency. • Adjust *E1-04 to E1-10 [V/f Pattern Parameters]*. For motor 2, adjust *E3-04 to E3-10*.
		The torque compensation gain is too large.	Decrease the value set in *C4-01 [Torque Compensation Gain]* to make sure that the motor does not stall.
		Electrical interference caused a problem.	Examine the control circuit lines, main circuit lines, and ground wiring, and decrease the effects of electrical interference.
		The gain during overexcitation operation is too large.	Find the time when the fault occurs.
		The drive received an Up/Down command while the motor was coasting.	Examine the sequence and input the Up/Down command after the motor fully stops.
		In PM Control Methods, the setting of the motor code is incorrect.	For specialized motors, refer to the motor test report and set *E5-xx [PM Motor Settings]* correctly.
		The current flowing in the motor is more than the value set in *L8-27 [Overcurrent Detection Gain]* for PM Control Methods.	Correct the value set in *L8-27*.
		The control method is set incorrectly for the motor.	Set *A1-02 [Control Method Selection]* correctly.

Code	Name	Causes	Possible Solutions
		The motor main circuit cable is too long.	Replace the drive with a larger capacity model.

Note:
• This fault occurs if the drive sensors detect a drive output current more than the specified overcurrent detection level.
• Do a Fault Reset to clear the fault.

Code	Name	Causes	Possible Solutions
oFA00	Option Not Compatible with Port	The option card connected to connector CN5-A is not compatible.	Connect the option to the correct connector. **Note:** Encoder option cards are not compatible with connector CN5-A.

Note:
• Do a Fault Reset to clear the fault.
• Fault trace is not available for these faults.

Code	Name	Causes	Possible Solutions
oFA01	Option Fault/Connection Error	The option card connected to connector CN5-A was changed during operation.	1. De-energize the drive. 2. Refer to the option card manual and correctly connect the option card to the connector on the drive.

Note:
Do a Fault Reset to clear the fault.

Code	Name	Causes	Possible Solutions
oFA02	Duplicate Options	The same option cards or the same type of option cards are connected to connectors CN5-A, CN5-B, and CN5-C.	Connect the option card to the correct connector. **Note:** Use connectors CN5-C and CN5-B to connect two encoder option cards.

Note:
Do a Fault Reset to clear the fault.

Code	Name	Causes	Possible Solutions
oFA03	Diagnostic Error	A fault occurred in the option card.	1. De-energize the drive. 2. Make sure that the option card is correctly connected to the connector. 3. If the problem continues, replace the option card.

Note:
Do a Fault Reset to clear the fault.

Code	Name	Causes	Possible Solutions
oFA04	Flash Write Mode	A fault occurred in the option card.	1. De-energize the drive. 2. Make sure that the option card is correctly connected to the connector. 3. If the problem continues, replace the option card.

Note:
Do a Fault Reset to clear the fault.

Code	Name	Causes	Possible Solutions
oFA05	Option A/D Error	A fault occurred in the option card.	1. De-energize the drive. 2. Make sure that the option card is correctly connected to the connector. 3. If the problem continues, replace the option card.

Note:
Do a Fault Reset to clear the fault.

Code	Name	Causes	Possible Solutions
oFA06	Option Communication Error	A fault occurred in the option card.	1. De-energize the drive. 2. Make sure that the option card is correctly connected to the connector. 3. If the problem continues, replace the option card.

Note:
Do a Fault Reset to clear the fault.

Code	Name	Causes	Possible Solutions
oFA10	Option RAM Error	A fault occurred in the option card.	1. De-energize the drive. 2. Make sure that the option card is correctly connected to the connector. 3. If the problem continues, replace the option card.

Note:
Do a Fault Reset to clear the fault.

Code	Name	Causes	Possible Solutions
oFA11	Option Ope Mode Error	A fault occurred in the option card.	1. De-energize the drive. 2. Make sure that the option card is correctly connected to the connector. 3. If the problem continues, replace the option card.
Note: Do a Fault Reset to clear the fault.			
Code	**Name**	**Causes**	**Possible Solutions**
oFA12	Drive Receive CRC Error	A fault occurred in the option card.	1. De-energize the drive. 2. Make sure that the option card is correctly connected to the connector. 3. If the problem continues, replace the option card.
Note: Do a Fault Reset to clear the fault.			
Code	**Name**	**Causes**	**Possible Solutions**
oFA13	Drive Receive Frame Error	A fault occurred in the option card.	1. De-energize the drive. 2. Make sure that the option card is correctly connected to the connector. 3. If the problem continues, replace the option card.
Note: Do a Fault Reset to clear the fault.			
Code	**Name**	**Causes**	**Possible Solutions**
oFA14	Drive Receive Abort Error	A fault occurred in the option card.	1. De-energize the drive. 2. Make sure that the option card is correctly connected to the connector. 3. If the problem continues, replace the option card.
Note: Do a Fault Reset to clear the fault.			
Code	**Name**	**Causes**	**Possible Solutions**
oFA15	Option Receive CRC Error	A fault occurred in the option card.	1. De-energize the drive. 2. Make sure that the option card is correctly connected to the connector. 3. If the problem continues, replace the option card.
Note: Do a Fault Reset to clear the fault.			
Code	**Name**	**Causes**	**Possible Solutions**
oFA16	Option Receive Frame Error	A fault occurred in the option card.	1. De-energize the drive. 2. Make sure that the option card is correctly connected to the connector. 3. If the problem continues, replace the option card.
Note: Do a Fault Reset to clear the fault.			
Code	**Name**	**Causes**	**Possible Solutions**
oFA17	Option Receive Abort Error	A fault occurred in the option card.	1. De-energize the drive. 2. Make sure that the option card is correctly connected to the connector. 3. If the problem continues, replace the option card.
Note: Do a Fault Reset to clear the fault.			
Code	**Name**	**Causes**	**Possible Solutions**
oFA30	COM ID Error	A fault occurred in the option card.	1. De-energize the drive. 2. Make sure that the option card is correctly connected to the connector. 3. If the problem continues, replace the option card.
Note: Do a Fault Reset to clear the fault.			
Code	**Name**	**Causes**	**Possible Solutions**
oFA31	Type Code Error	A fault occurred in the option card.	1. De-energize the drive. 2. Make sure that the option card is correctly connected to the connector. 3. If the problem continues, replace the option card.
Note: Do a Fault Reset to clear the fault.			

Code	Name	Causes	Possible Solutions
oFA32	SUM Check Error	A fault occurred in the option card.	1. De-energize the drive. 2. Make sure that the option card is correctly connected to the connector. 3. If the problem continues, replace the option card.
Note: Do a Fault Reset to clear the fault.			
Code	**Name**	**Causes**	**Possible Solutions**
oFA33	Option Receive Time Over	A fault occurred in the option card.	1. De-energize the drive. 2. Make sure that the option card is correctly connected to the connector. 3. If the problem continues, replace the option card.
Note: Do a Fault Reset to clear the fault.			
Code	**Name**	**Causes**	**Possible Solutions**
oFA34	Memobus Time Over	A fault occurred in the option card.	1. De-energize the drive. 2. Make sure that the option card is correctly connected to the connector. 3. If the problem continues, replace the option card.
Note: Do a Fault Reset to clear the fault.			
Code	**Name**	**Causes**	**Possible Solutions**
oFA35	Drive Receive Time Over 1	A fault occurred in the option card.	1. De-energize the drive. 2. Make sure that the option card is correctly connected to the connector. 3. If the problem continues, replace the option card.
Note: Do a Fault Reset to clear the fault.			
Code	**Name**	**Causes**	**Possible Solutions**
oFA36	CI Check Error	A fault occurred in the option card.	1. De-energize the drive. 2. Make sure that the option card is correctly connected to the connector. 3. If the problem continues, replace the option card.
Note: Do a Fault Reset to clear the fault.			
Code	**Name**	**Causes**	**Possible Solutions**
oFA37	Drive Receive Time Over 2	A fault occurred in the option card.	1. De-energize the drive. 2. Make sure that the option card is correctly connected to the connector. 3. If the problem continues, replace the option card.
Note: Do a Fault Reset to clear the fault.			
Code	**Name**	**Causes**	**Possible Solutions**
oFA38	Control Reference Error	A fault occurred in the option card.	1. De-energize the drive. 2. Make sure that the option card is correctly connected to the connector. 3. If the problem continues, replace the option card.
Note: Do a Fault Reset to clear the fault.			
Code	**Name**	**Causes**	**Possible Solutions**
oFA39	Drive Receive Time Over 3	A fault occurred in the option card.	1. De-energize the drive. 2. Make sure that the option card is correctly connected to the connector. 3. If the problem continues, replace the option card.
Note: Do a Fault Reset to clear the fault.			
Code	**Name**	**Causes**	**Possible Solutions**
oFA40	CtrlResSel 1Err	A fault occurred in the option card.	1. De-energize the drive. 2. Make sure that the option card is correctly connected to the connector. 3. If the problem continues, replace the option card.
Note: Do a Fault Reset to clear the fault.			

Code	Name	Causes	Possible Solutions
oFA41	Drive Receive Time Over 4	A fault occurred in the option card.	1. De-energize the drive. 2. Make sure that the option card is correctly connected to the connector. 3. If the problem continues, replace the option card.
Note: Do a Fault Reset to clear the fault.			
Code	**Name**	**Causes**	**Possible Solutions**
oFA42	CtrlResSel 2Err	A fault occurred in the option card.	1. De-energize the drive. 2. Make sure that the option card is correctly connected to the connector. 3. If the problem continues, replace the option card.
Note: Do a Fault Reset to clear the fault.			
Code	**Name**	**Causes**	**Possible Solutions**
oFA43	Drive Receive Time Over 5	A fault occurred in the option card.	1. De-energize the drive. 2. Make sure that the option card is correctly connected to the connector. 3. If the problem continues, replace the option card.
Note: Do a Fault Reset to clear the fault.			
Code	**Name**	**Causes**	**Possible Solutions**
oFb00	Option Not Compatible with Port	The option connected to connector CN5-B is not compatible.	Connect the option to the correct connector. **Note:** DO-A3, AO-A3, PG-B3, and PG-X3 options can connect to connector CN5-B. To connect only one PG option card, use the CN5-C connector.
Note: • Do a Fault Reset to clear the fault. • Fault trace is not available for these faults.			
Code	**Name**	**Causes**	**Possible Solutions**
oFb01	Option Fault/Connection Error	The option card connected to connector CN5-B was changed during operation.	1. De-energize the drive. 2. Refer to the option card manual and correctly connect the option card to the connector on the drive.
Note: Do a Fault Reset to clear the fault.			
Code	**Name**	**Causes**	**Possible Solutions**
oFb02	Duplicate Options	The same option cards or the same type of option cards are connected to connectors CN5-A, CN5-B, and CN5-C.	Connect the option card to the correct connector.
Note: Do a Fault Reset to clear the fault.			
Code	**Name**	**Causes**	**Possible Solutions**
oFb03	Diagnostic Error	A fault occurred in the option card.	1. De-energize the drive. 2. Make sure that the option card is correctly connected to the connector. 3. If the problem continues, replace the option card.
Note: Do a Fault Reset to clear the fault.			
Code	**Name**	**Causes**	**Possible Solutions**
oFb04	Flash Write Mode	A fault occurred in the option card.	1. De-energize the drive. 2. Make sure that the option card is correctly connected to the connector. 3. If the problem continues, replace the option card.
Note: Do a Fault Reset to clear the fault.			
Code	**Name**	**Causes**	**Possible Solutions**
oFb05	Option A/D Error	A fault occurred in the option card.	1. De-energize the drive. 2. Make sure that the option card is correctly connected to the connector. 3. If the problem continues, replace the option card.
Note: Do a Fault Reset to clear the fault.			

Code	Name	Causes	Possible Solutions
oFb06	Option Communication Error	A fault occurred in the option card.	1. De-energize the drive. 2. Make sure that the option card is correctly connected to the connector. 3. If the problem continues, replace the option card.
Note: Do a Fault Reset to clear the fault.			
Code	**Name**	**Causes**	**Possible Solutions**
oFb10	Option RAM Error	A fault occurred in the option card.	1. De-energize the drive. 2. Make sure that the option card is correctly connected to the connector. 3. If the problem continues, replace the option card.
Note: Do a Fault Reset to clear the fault.			
Code	**Name**	**Causes**	**Possible Solutions**
oFb11	Option Ope Mode Error	A fault occurred in the option card.	1. De-energize the drive. 2. Make sure that the option card is correctly connected to the connector. 3. If the problem continues, replace the option card.
Note: Do a Fault Reset to clear the fault.			
Code	**Name**	**Causes**	**Possible Solutions**
oFb12	Drive Receive CRC Error	A fault occurred in the option card.	1. De-energize the drive. 2. Make sure that the option card is correctly connected to the connector. 3. If the problem continues, replace the option card.
Note: Do a Fault Reset to clear the fault.			
Code	**Name**	**Causes**	**Possible Solutions**
oFb13	Drive Receive Frame Error	A fault occurred in the option card.	1. De-energize the drive. 2. Make sure that the option card is correctly connected to the connector. 3. If the problem continues, replace the option card.
Note: Do a Fault Reset to clear the fault.			
Code	**Name**	**Causes**	**Possible Solutions**
oFb14	Drive Receive Abort Error	A fault occurred in the option card.	1. De-energize the drive. 2. Make sure that the option card is correctly connected to the connector. 3. If the problem continues, replace the option card.
Note: Do a Fault Reset to clear the fault.			
Code	**Name**	**Causes**	**Possible Solutions**
oFb15	Option Receive CRC Error	A fault occurred in the option card.	1. De-energize the drive. 2. Make sure that the option card is correctly connected to the connector. 3. If the problem continues, replace the option card.
Note: Do a Fault Reset to clear the fault.			
Code	**Name**	**Causes**	**Possible Solutions**
oFb16	Option Receive Frame Error	A fault occurred in the option card.	1. De-energize the drive. 2. Make sure that the option card is correctly connected to the connector. 3. If the problem continues, replace the option card.
Note: Do a Fault Reset to clear the fault.			
Code	**Name**	**Causes**	**Possible Solutions**
oFb17	Option Receive Abort Error	A fault occurred in the option card.	1. De-energize the drive. 2. Make sure that the option card is correctly connected to the connector. 3. If the problem continues, replace the option card.
Note: Do a Fault Reset to clear the fault.			

Code	Name	Causes	Possible Solutions
oFC00	Option Not Compatible with Port	The option card connected to connector CN5-C is not compatible.	Connect the option card to the correct connector. **Note:** DI-A3 and communication option cards cannot be connected to the CN5-C connector.
Note: • Do a Fault Reset to clear the fault. • Fault trace is not available for these faults.			
Code	**Name**	**Causes**	**Possible Solutions**
oFC01	Option Fault/Connection Error	The option card connected to connector CN5-C was changed during operation.	1. De-energize the drive. 2. Refer to the option card manual and correctly connect the option card to the connector on the drive.
Note: Do a Fault Reset to clear the fault.			
Code	**Name**	**Causes**	**Possible Solutions**
oFC02	Duplicate Options	The same option cards or the same type of option cards are connected to connectors CN5-A, CN5-B, and CN5-C.	Connect the option card to the correct connector.
Note: Do a Fault Reset to clear the fault.			
Code	**Name**	**Causes**	**Possible Solutions**
oFC03	Diagnostic Error	A fault occurred in the option card.	1. De-energize the drive. 2. Make sure that the option card is correctly connected to the connector. 3. If the problem continues, replace the option card.
Note: Do a Fault Reset to clear the fault.			
Code	**Name**	**Causes**	**Possible Solutions**
oFC04	Flash Write Mode	A fault occurred in the option card.	1. De-energize the drive. 2. Make sure that the option card is correctly connected to the connector. 3. If the problem continues, replace the option card.
Note: Do a Fault Reset to clear the fault.			
Code	**Name**	**Causes**	**Possible Solutions**
oFC05	Option A/D Error	A fault occurred in the option card.	1. De-energize the drive. 2. Make sure that the option card is correctly connected to the connector. 3. If the problem continues, replace the option card.
Note: Do a Fault Reset to clear the fault.			
Code	**Name**	**Causes**	**Possible Solutions**
oFC06	Option Communication Error	A fault occurred in the option.	1. De-energize the drive. 2. Make sure that the option is correctly connected to the connector. 3. Re-energize the drive. If the problem continues, replace the option.
		You re-energized the drive when: • There is an encoder option installed the drive • The drive main circuit power supply is energized • There is an external 24 V power supply connected to terminals PS-AC.	1. De-energize the drive main circuit power supply and the external 24 V power supply to terminals PS-AC. 2. After the keypad display goes out, energize the drive main circuit power supply again. 3. Supply the external 24 V power to terminals PS-AC.
			When you use an encoder, de-energize the drive main circuit power supply.
Note: Do a Fault Reset to clear the fault.			
Code	**Name**	**Causes**	**Possible Solutions**
oFC10	Option RAM Error	A fault occurred in the option card.	1. De-energize the drive. 2. Make sure that the option card is correctly connected to the connector. 3. If the problem continues, replace the option card.
Note: Do a Fault Reset to clear the fault.			

Code	Name	Causes	Possible Solutions
oFC11	Option Ope Mode Error	A fault occurred in the option card.	1. De-energize the drive. 2. Make sure that the option card is correctly connected to the connector. 3. If the problem continues, replace the option card.
Note: Do a Fault Reset to clear the fault.			
Code	**Name**	**Causes**	**Possible Solutions**
oFC12	Drive Receive CRC Error	A fault occurred in the option card.	1. De-energize the drive. 2. Make sure that the option card is correctly connected to the connector. 3. If the problem continues, replace the option card.
Note: Do a Fault Reset to clear the fault.			
Code	**Name**	**Causes**	**Possible Solutions**
oFC13	Drive Receive Frame Error	A fault occurred in the option card.	1. De-energize the drive. 2. Make sure that the option card is correctly connected to the connector. 3. If the problem continues, replace the option card.
Note: Do a Fault Reset to clear the fault.			
Code	**Name**	**Causes**	**Possible Solutions**
oFC14	Drive Receive Abort Error	A fault occurred in the option card.	1. De-energize the drive. 2. Make sure that the option card is correctly connected to the connector. 3. If the problem continues, replace the option card.
Note: Do a Fault Reset to clear the fault.			
Code	**Name**	**Causes**	**Possible Solutions**
oFC15	Option Receive CRC Error	A fault occurred in the option card.	1. De-energize the drive. 2. Make sure that the option card is correctly connected to the connector. 3. If the problem continues, replace the option card.
Note: Do a Fault Reset to clear the fault.			
Code	**Name**	**Causes**	**Possible Solutions**
oFC16	Option Receive Frame Error	A fault occurred in the option card.	1. De-energize the drive. 2. Make sure that the option card is correctly connected to the connector. 3. If the problem continues, replace the option card.
Note: Do a Fault Reset to clear the fault.			
Code	**Name**	**Causes**	**Possible Solutions**
oFC17	Option Receive Abort Error	A fault occurred in the option card.	1. De-energize the drive. 2. Make sure that the option card is correctly connected to the connector. 3. If the problem continues, replace the option card.
Note: Do a Fault Reset to clear the fault.			
Code	**Name**	**Causes**	**Possible Solutions**
oFC50	Encoder Option A/D Conv Error	A fault occurred in the option card.	Refer to the manual for the PG-F3 option card.
Note: Do a Fault Reset to clear the fault.			
Code	**Name**	**Causes**	**Possible Solutions**
oFC51	EncOpAnlgCrctErr	A fault occurred in the option card.	Refer to the manual for the PG-F3 option card.
Note: Do a Fault Reset to clear the fault.			
Code	**Name**	**Causes**	**Possible Solutions**
oFC52	Encoder Option Comm Timeout	A fault occurred in the option card.	Refer to the manual for the PG-F3 option card.
Note: Do a Fault Reset to clear the fault.			

Code	Name	Causes	Possible Solutions
oFC53	Encoder Option Comm Data Fault	A fault occurred in the option card.	Refer to the manual for the PG-F3 option card.
Note: Do a Fault Reset to clear the fault.			
Code	**Name**	**Causes**	**Possible Solutions**
oFC54	Encoder Error	A fault occurred in the option card.	Refer to the manual for the PG-F3 option card.
Note: Do a Fault Reset to clear the fault.			
Code	**Name**	**Causes**	**Possible Solutions**
oFC55	Resolver Error	A fault occurred in the option card.	Refer to the manual for the PG-F3 option card.
Note: Do a Fault Reset to clear the fault.			
Code	**Name**	**Causes**	**Possible Solutions**
oH	Heatsink Overheat	The ambient temperature is high and the heatsink temperature of the drive is more than the value set in *L8-02 [Overheat Alarm Level]*.	• Measure the ambient temperature. • Increase the airflow in the control panel. • Install a cooling device (cooling fan or air conditioner) to lower the ambient temperature. • Remove objects near the drive that are producing too much heat.
		The load is too heavy.	• Measure the output current. • Decrease the load.
		The internal cooling fan of the drive stopped.	1. Use the procedures in this manual to replace the cooling fan. 2. Set *o4-03 = 0 [Fan Operation Time Setting = 0 h]* to reset the cooling fan operation time.
Note: • The drive detects this fault if the heatsink temperature of the drive is more than the value set in *L8-02*. • Do a Fault Reset to clear the fault. • If the drive detects this fault, it will operate the motor as specified by the stopping method set in *L8-03 [Overheat Pre-Alarm Selection]*.			
Code	**Name**	**Causes**	**Possible Solutions**
oH1	Heatsink Overheat	The ambient temperature is high and the heatsink temperature of the drive is more than the *oH1* detection level.	• Measure the ambient temperature. • Increase the airflow in the control panel. • Install a cooling device (cooling fan or air conditioner) to lower the ambient temperature. • Remove objects near the drive that are producing too much heat.
		The load is too heavy.	• Measure the output current. • Decrease the load.
Note: • The drive detects this fault if the heatsink temperature of the drive is more than the *oH1* detection level. Parameter *o2-04 [Drive Model (KVA) Selection]* sets the *oH1* detection level. • Do a Fault Reset to clear the fault.			
Code	**Name**	**Causes**	**Possible Solutions**
oH3	Motor Overheat (PTC Input)	The thermistor wiring that detects motor temperature is defective.	Correct wiring errors.
		A fault occurred on the machine. Example: The machine is locked.	Examine the machine and remove the cause of the fault.
		The motor has overheated.	• Examine the load levels, acceleration/deceleration ramps, and motor start/stop frequencies (cycle times). • Decrease the load. • Increase the values set in *C1-01 to C1-08 [Acceleration/ Deceleration Ramps]*. • Set *E2-01 [Motor Rated Current (FLA)]* correctly to the value specified by the motor nameplate. • Make sure that the motor cooling system is operating correctly, and repair or replace it if it is damaged. • Adjust *E1-04 to E1-10 [V/f Pattern Parameters]*. For motor 2, adjust *E3-04 to E3-10*. Decrease the values set in *E1-08 [Mid Point A Voltage]* and *E1-10 [Minimum Output Voltage]*. **Note:** If the values set in *E1-08* and *E1-10* are too low, the overload tolerance will decrease at low speeds.
Note: • When *H3-02, H3-10, or H3-06 = E [MFAI Function Selection = Motor Temperature (PTC Input)]*, the drive detects this fault if the motor overheat signal entered to an analog input terminal A1, A2, or A3 is more than the alarm detection level. • Do a Fault Reset to clear the fault. • If the drive detects this fault, it will operate the motor as specified by the stopping method set in *L1-03 [Motor Thermistor oH Alarm Select]*.			

Code	Name	Causes	Possible Solutions
oH4	Motor Overheat Fault (PTC Input)	The motor has overheated.	• Examine the load levels, acceleration/deceleration ramps, and motor start/stop frequencies (cycle times). • Decrease the load. • Increase the values set in *C1-01 to C1-08 [Acceleration/ Deceleration Ramps]*. • Set *E2-01 [Motor Rated Current (FLA)]* correctly to the value specified by the motor nameplate. • Make sure that the motor cooling system is operating correctly, and repair or replace it if it is damaged. • Adjust *E1-04 to E1-10 [V/f Pattern Parameters]*. For motor 2, adjust *E3-04 to E3-10*. Decrease the values set in *E1-08 [Mid Point A Voltage]* and *E1-10 [Minimum Output Voltage]*. **Note:** If the values set in *E1-08* and *E1-10* are too low, the overload tolerance will decrease at low speeds.

Note:
• When *H3-02, H3-10, or H3-06 = E [MFAI Function Selection = Motor Temperature (PTC Input)]*, the drive detects this fault if the motor overheat signal entered to an analog input terminal A1, A2, or A3 is more than the alarm detection level.
• Do a Fault Reset to clear the fault.

Code	Name	Causes	Possible Solutions
oL1	Motor Overload	The load is too heavy.	Decrease the load. **Note:** Reset *oL1* when *U4-16 [Motor oL1 Level]* < 100.
		The acceleration/deceleration ramps or cycle times are too fast.	• Examine the acceleration/deceleration ramps and the motor start/stop frequencies (cycle times). • Increase the values set in *C1-01 to C1-08 [Acceleration/ Deceleration Ramps]*.
		Overload occurred while running at low speed.	• Decrease the load when running at low speed. • Increase the motor speed. • If the motor is run frequently at low speeds, replace the motor with a larger motor or use a drive-dedicated motor. **Note:** For general-purpose motors, overload can occur while running at low speed when operating at below the rated current.
		L1-01 [Motor Overload (oL1) Protection] is set incorrectly.	Set *L1-01* as specified by the motor qualities for a drive-dedicated motor.
		The V/f pattern does not fit the motor qualities.	• Examine the ratios between the V/f pattern frequency and voltage. Decrease the voltage if it is too high compared to the frequency. • Adjust *E1-04 to E1-10 [V/f Pattern Parameters]*. For motor 2, adjust *E3-04 to E3-10*. Decrease the values set in *E1-08 [Mid Point A Voltage]* and *E1-10 [Minimum Output Voltage]*. **Note:** If the values set in *E1-08* and *E1-10* are too low, the overload tolerance will decrease at low speeds.
		E1-06 [Base Frequency] is set incorrectly.	Set *E1-06* to the rated frequency shown on the motor nameplate.
		One drive is operating more than one motor.	Set *L1-01 = 0 [Motor Overload (oL1) Protection = Disabled]*, connect thermal overload relay to each motor to prevent damage to the motor.
		The electronic thermal protector qualities and the motor overload properties do not align.	• Examine the motor qualities and set *L1-01 [Motor Overload (oL1) Protection]* correctly. • Connect a thermal overload relay to the motor.
		The electronic thermal protector is operating at an incorrect level.	Set *E2-01 [Motor Rated Current (FLA)]* correctly to the value specified by the motor nameplate.
		Phase loss in the input power supply is causing the output current to change.	Make sure that there is no phase loss, and repair problems.

Note:
• The drive detects this fault if the electronic thermal protector of the drive started the motor overload protection.
• Do a Fault Reset to clear the fault.

Code	Name	Causes	Possible Solutions
oL2	Drive Overload	The load is too large.	Decrease the load.
		The acceleration/deceleration ramps or cycle times are too fast.	• Examine the acceleration/deceleration ramps and the motor start/stop frequencies (cycle times). • Increase the values set in *C1-01 to C1-08 [Acceleration/ Deceleration Ramps]*.

Code	Name	Causes	Possible Solutions
		The V/f pattern does not fit the motor qualities.	• Examine the ratios between the V/f pattern frequency and voltage. Decrease the voltage if it is too high compared to the frequency. • Adjust *E1-04 to E1-10 [V/f Pattern Parameters]*. Decrease the values set in *E1-08 [Mid Point A Voltage]* and *E1-10 [Minimum Output Voltage]*. For motor 2, adjust *E3-04 to E3-10*. **Note:** If the values set in *E1-08* and *E1-10* are too low, the overload tolerance will decrease at low speeds.
		The drive capacity is too small.	Replace the drive with a larger capacity model.
		Overload occurred while running at low speed.	• Decrease the load when running at low speed. • Replace the drive with a larger capacity model.
		The torque compensation gain is too large.	Decrease the value set in *C4-01 [Torque Compensation Gain]* to make sure that the motor does not stall.
		Phase loss in the input power supply is causing the output current to change.	• Correct errors with the wiring for main circuit drive input power. • Make sure that there is no phase loss, and repair problems.

Note:
• The drive detects this fault if the electronic thermal protector of the drive started drive overload protection.
• Do a Fault Reset to clear the fault.

Code	Name	Causes	Possible Solutions
oL3	Overtorque Detection 1	A fault occurred on the machine. Example: The machine is locked.	Examine the machine and remove the cause of the fault.
		The parameters are incorrect for the load.	Adjust *L6-02 [Torque Detection Level 1]* and *L6-03 [Torque Detection Time 1]* settings.

Note:
• The drive detects this fault if the drive output current is more than the level set in *L6-02* for longer than *L6-03*.
• Do a Fault Reset to clear the fault.
• If the drive detects this fault, it will operate the motor as specified by the stopping method set in *L6-01 [Torque Detection Selection 1]*.

Code	Name	Causes	Possible Solutions
oL4	Overtorque Detection 2	A fault occurred on the machine. Example: The machine is locked.	Examine the machine and remove the cause of the fault.
		The parameters are incorrect for the load.	Adjust *L6-05 [Torque Detection Level 2]* and *L6-06 [Torque Detection Time 2]* settings.

Note:
• The drive detects this fault if the drive output current is more than the level set in *L6-05* for longer than *L6-06*.
• Do a Fault Reset to clear the fault.
• If the drive detects this fault, it will operate the motor as specified by the stopping method set in *L6-04 [Torque Detection Selection 2]*.

Code	Name	Causes	Possible Solutions
oPr	Keypad Connection Fault	The keypad is not securely connected to the connector on the drive.	Examine the connection between the keypad and the drive.
		The connection cable between the drive and the keypad is disconnected.	• Remove the keypad and then reconnect it. • Replace the cable if damaged.

Note:
• The drive detects this fault if these conditions are correct:
–*o2-06 = 1 [Keypad Disconnect Detection = Enabled]*.
–*b1-02 = 0 [Up/Down Command Selection 1 = Keypad]*, or the drive is operating in LOCAL Mode with the keypad.
• Do a Fault Reset to clear the fault.

Code	Name	Causes	Possible Solutions
oS	Overspeed	There is overshoot.	Decrease *C5-01 [ASR Proportional Gain 1]* and increase *C5-02 [ASR Integral Time 1]*.
		The *oS* detection level is set incorrectly.	Adjust *F1-08 [Overspeed Detection Level]* and *F1-09 [Overspeed Detection Delay Time]*.

Note:
• The drive detects this fault if the motor speed is more than the value set in *F1-08* for longer than *F1-09*.
• Do a Fault Reset to clear the fault.
• If the drive detects this fault, it will operate the motor as specified by the stopping method set in *F1-03 [Overspeed Detection Selection]*.

Code	Name	Causes	Possible Solutions
ov	Overvoltage	The deceleration ramp is too fast and too much regenerative energy is flowing back into the drive.	• Increase the values set in *C1-02, C1-04, C1-06, or C1-08 [Deceleration Ramps]*. • Connect a dynamic braking option to the drive.
		The acceleration ramp is too fast.	• Make sure that sudden drive acceleration does not cause the fault. • Increase the values set in *C1-01, C1-03, C1-05, or C1-07 [Acceleration Ramps]*. • Increase the value set in *C2-02 [Jerk @ End of Accel]*.
		The braking load is too large.	Connect a dynamic braking option to the drive.

Code	Name	Causes	Possible Solutions
		There are surge voltages in the input power supply.	Connect a DC reactor to the drive. **Note:** If you turn the phase advancing capacitors ON and OFF and use thyristor converters in the same power supply system, there can be surge voltages that irregularly increase the input voltage.
		The drive output cable or motor is shorted to ground (the current short to ground is charging the main circuit capacitor of the drive through the power supply).	1. Examine the motor main circuit cable, terminals, and motor terminal box, and then remove ground faults. 2. Re-energize the drive.
		The power supply voltage is too high.	Decrease the power supply voltage to match the drive rated voltage.
		The braking resistor or braking resistor unit wiring is incorrect.	Correct wiring errors in the connection to the braking resistor or braking resistor unit.
		The encoder cable is disconnected or wired incorrectly.	Examine for wiring errors or disconnected wires in the encoder cable, and repair problems.
		Noise interference in the encoder cable.	Isolate the encoder cable from the drive output line or a different source of electrical interference.
		Electrical interference caused a drive malfunction.	• Examine the control circuit lines, main circuit lines, and ground wiring, and decrease the effects of electrical interference. • Make sure that a magnetic contactor is not the source of the electrical interference, then use a Surge Protective Device if necessary.
		There is motor hunting.	Adjust *n2-02 [Automatic Freq Regulator Time 1]* and *n2-03 [Automatic Freq Regulator Time 2]*.
		The drive detects *ov [Overvoltage]* when *A1-02 = 2 [OLV]* and when: • The acceleration completes • The deceleration starts • The load changes suddenly	Increase the value set in *n2-03* in 50 ms increments. **Note:** Make sure that this parameter setting is: *n2-02 [Automatic Freq Regulator Time 1]* ≤ *n2-03*.

Note:
• The drive detects this fault if the DC bus voltage is more than the *ov* detection level while the drive is running.
• Do a Fault Reset to clear the fault.
• For 200 V class drives, the detection level of *ov* is approximately 410 V. For 400 V class drives, the detection level of *ov* is approximately 820 V.

Code	Name	Causes	Possible Solutions
PF	Input Phase Loss	There is a phase loss in the drive input power.	Correct errors with the wiring for main circuit drive input power.
		There is loose wiring in the drive input power terminals.	Tighten the terminal screws to the correct tightening torque.
		The drive input power voltage is changing too much.	• Examine the input power for problems. • Make the drive input power stable. • If the input power supply is good, examine the magnetic contactor on the main circuit side for problems.
		There is unsatisfactory balance between voltage phases.	• Examine the input power for problems. • Make the drive input power stable. • If the supply voltage is good, examine the magnetic contactor on the main circuit side for problems. • Set *L8-05 = 0 [Input Phase Loss Protection Sel = Disabled]*.
		The main circuit capacitors have become unserviceable.	Examine the capacitor maintenance time in monitor *U4-05 [CapacitorMaintenance]*. If *U4-05* is more than 90%, replace the control board or the drive. Contact Yaskawa or your nearest sales representative to replace the control board.
			• Examine the supply voltage for problems. • Re-energize the drive. • If drive input power is correct and the fault stays, replace the control board or the drive. Contact Yaskawa or your nearest sales representative to replace the control board.

Note:
• The drive detects this fault if the DC bus voltage changes irregularly without regeneration.
• Do a Fault Reset to clear the fault.
• Use *L8-05* to enable and disable *PF* detection.

Code	Name	Causes	Possible Solutions
PF5	Rescue Power Supply Low Error	During Rescue Operation, either the DC bus voltage dropped below *S4-12 [DC Bus Voltage during Rescue]* × (*S4-13 [PowerSupply Reduction Lvl@Rescue]* - 10%), or 100 ms after triggering Rescue Operation, the DC bus voltage did not reach *S4-12* × *S4-13* before the motor started.	• Examine the value set in *S4-12*. • Decrease the speed reference set for *S4-15 [Rescue Speed Reference Selection]*. • Examine the backup power supply. If the UPS is worn and cannot provide enough power, it may be necessary for you to replace it with another UPS.

Note:
Do a Fault Reset to clear the fault.

Code	Name	Causes	Possible Solutions
PGo	Encoder (PG) Feedback Loss	The encoder cable is disconnected or wired incorrectly.	Examine for wiring errors or disconnected wires in the encoder cable, and repair problems.
		The encoder is not receiving power.	Examine the encoder power supply.
		The holding brake is stopping the motor.	Release the holding brake.

Note:
• The drive detects this fault if it does not receive the speed detection pulse signal from the encoder in the detection time set in *F1-14 [Encoder Open-Circuit Detect Time]*.
• Do a Fault Reset to clear the fault.
• If the drive detects this fault, it will operate the motor as specified by the stopping method set in *F1-02 [Encoder Signal Loss Detect Sel]*.

Code	Name	Causes	Possible Solutions
PGoH	Encoder (PG) Hardware Fault	The encoder cable is disconnected.	Repair any disconnected wires in the encoder cable.

Note:
• Do a Fault Reset to clear the fault.
• Parameter *F1-20 [Encoder 1 PCB Disconnect Detect]* enables and disables *PGoH* detection.
• If the drive detects this fault, it will operate the motor as specified by the stopping method set in *F1-02 [Encoder Signal Loss Detect Sel]*.

Code	Name	Causes	Possible Solutions
rF	Braking Resistor Fault	The resistance of the dynamic braking option that is connected to the drive is too low.	Use a dynamic braking option that fits the model and duty rating of the drive.
		A regenerative converter, regenerative unit, or braking unit is connected to the drive.	Set *L8-55 = 0 [Internal DB TransistorProtection = RF Disabled/ BOL Disabled]*.

Note:
Do a Fault Reset to clear the fault.

Code	Name	Causes	Possible Solutions
rr	Dynamic Braking Transistor Fault	The drive control circuit is damaged.	• Re-energize the drive. • If the fault stays, replace the control board or the drive. Contact Yaskawa or your nearest sales representative to replace the control board.
		There is a malfunction in the internal braking transistor of the drive.	

Note:
Do a Fault Reset to clear the fault.

Code	Name	Causes	Possible Solutions
SC	Short Circuit/IGBT Failure	Overheating caused damage to the motor or the motor insulation is not satisfactory.	Measure the motor insulation resistance, and replace the motor if there is electrical conduction or unserviceable insulation.
		The motor main circuit cable is contacting ground to make a short circuit.	• Examine the motor main circuit cable for damage, and repair short circuits. • Measure the resistance between the motor main circuit cable and the ground terminal. If there is electrical conduction, replace the cable.
		A short circuit or ground fault on the drive output side caused damage to the output transistor of the drive.	• Make sure that there is not a short circuit in terminal B1 and terminals U/T1, V/T2, and W/T3. Make sure that there is not a short circuit in terminals - and terminals U/T1, V/T2, and W/T3. • If there is a short circuit, contact Yaskawa or your nearest sales representative.
		When *A1-02 = 7 [Control Method Selection = CLV/PM]*, the output current is more than the value set in *L8-27 [Overcurrent Detection Gain]*.	Set *L8-27* correctly.

Note:
• The drive detects this fault if there is a short circuit or ground fault on the drive output side, or an IGBT failure.
• Do a Fault Reset to clear the fault.

Code	Name	Causes	Possible Solutions
SCE	Short Circuit Brake Sequence Err	There is a problem with the motor contactor for short circuit or auxiliary switch.	Examine the motor contactor for a short circuit.

Note:
The drive detects this fault if the motor contactor for short circuit is ON (closed) while the drive is generating PWM.

Code	Name	Causes	Possible Solutions
SCF	Safety Circuit Fault	The safety circuit is broken.	Replace the control board or the drive. Contact Yaskawa or your nearest sales representative to replace the control board.

Note:
Do a Fault Reset to clear the fault.

Code	Name	Causes	Possible Solutions
SE1	Motor Contactor Response Error	There is a problem with the motor contactor for short circuit or auxiliary switch.	Examine the motor contactor, auxiliary switches, and the wiring of the contactor feedback signal.

Note:
• The drive detects this fault if the motor contactor does not respond in the time set in *S1-10 [Up/Down Command Delay Time]*.
• Do a Fault Reset to clear the fault.

Code	Name	Causes	Possible Solutions
SE2	Starting Current Error	The motor contactor is OFF (open).	Check the motor contactor for any problems.

Note:
• The drive detects this fault if the output current is less than 25% of the motor no-load current at start.
• Do a Fault Reset to clear the fault.

Code	Name	Causes	Possible Solutions
SE3	Output Current Error	The motor contactor is OFF (open).	Check the motor contactor for any problems.

Note:
• The drive detects this fault if the output current is lower than 25% of the motor no-load current during operation.
• Do a Fault Reset to clear the fault.

Code	Name	Causes	Possible Solutions
SE4	Brake Response Error	The feedback contact on the brake is defective or the wiring is incorrect.	Check the brake feedback contact and the wiring.
		The brake control circuit does not operate correctly.	Make sure that the motor brake operates correctly with a brake control command from the drive.
		The motor contactor or relay for the brake is OFF (open).	• Check the motor contactor for any problems. • When *S6-07 = 1 [Brake Response Monitor Function = Enabled]*, check the motor contactor or relay. When there are no problems, set *S6-08 = 1 [SE4 Fault Reset = Enabled]* to reset the fault.

Note:
• The drive detects this fault if the MFDI terminal set for *H1-xx = 79 or 5B [Brake Feedback N.O or Brake Feedback N.C.]* does not respond in the time set in *S6-05 [BrakeSet Error(SE4) DetectDelayT]* when an MFDO terminal set for *H2-xx = 50 [Brake Control]* is activated.
• The drive also detects this fault if these conditions occur during run and continue for the time set in *S6-06 [SE4 Detection Time During Run]* when *S6-07 = 1*:
– The state of these signals (release/close) do not agree: one MFDO terminal set for *H2-xx = 50* and one of two MFDI terminals set for *H1-xx = 79*.
– The state of these signals (release/close) do not agree: one MFDO terminal set for *H2-xx = 50* and both two MFDI terminals set for *H1-xx = 79*.
• The drive does not detect this fault during hand evacuation. When the MFDI terminal set for *H1-xx = 55 or 155 [Rescue Operation or !Rescue Operation]* is activated and no internal Run command is active (this includes Position Lock or DC-Injection), *SE4* detection is disabled.
• Do a Fault Reset to clear the fault.

Code	Name	Causes	Possible Solutions
SE8	Sequence Error8	There is a problem with the motor contactor for short circuit or auxiliary switch.	Examine the motor contactor for a short circuit.

Note:
The drive detects this fault if the MFDO terminal set for *H2-xx = 78 [MFDO Function Selection = Short Circuit Brake Release]* turns ON/OFF, but the MFDI terminal set for *H1-xx = 4B or 4C [Short Circuit MCFeedback (NO) or Short Circuit MCFeedback (NC)]* does not turn ON/OFF in a certain period of time.

Code	Name	Causes	Possible Solutions
SvE	Zero Servo Fault	The value set in the torque limit is too small.	Adjust torque limit-related parameters *L7-01 to L7-04*.
		The load torque is too large.	Decrease the load torque.
		Noise interference in the encoder cable.	Isolate the encoder cable from the drive output line or a different source of electrical interference.

Note:
• The drive detects this fault if motor rotation position moves during Zero Servo.
• Do a Fault Reset to clear the fault.

Code	Name	Causes	Possible Solutions
TCF	TDCC Fault	The Travel Direction Change Counter (TDCC) has reached 0 and the lifetime of elevator ropes has expired.	1. Replace the elevator ropes. 2. Enter the defined password in *o4-44 [Travel Direct ChgCntr Passwd Set]*. **Note:** If you forgot the password, contact Yaskawa or your nearest sales representative. 3. Set *o4-40 = 0 [Travel Direct Change CounterEnbl = Disabled]* to clear the fault. 4. Set *o4-42 [TravelDirectChange Cnt PresetLvl]* to reset the TDCC value. **Note:** Calculate and set a correct value to *o4-42* according to EN81.50 or other applicable definitions. 5. Use *U4-64 [RemainDirect ChngLow]* and *U4-65 [RemainDirectChngHigh]* to make sure that the set value is correct. 6. Log the executed action and the related data in the maintenance logbook of your facility.

Note:
The drive detects this fault if the MFDO terminal set for *H2-xx = 77 [MFDO Function Selection = TDCC Fault Level Reached]* is active.

Code	Name	Causes	Possible Solutions
TiM	Keypad Time Not Set	There is a battery in the keypad, but the date and time are not set.	Use the keypad to set the date and time.

Note:
• Do a Fault Reset to clear the fault.
• Parameter *o4-24 [bAT Detection Selection]* enables and disables *TiM* detection.

Code	Name	Causes	Possible Solutions
UL3	Undertorque Detection 1	A fault occurred on the machine. Example: There is a broken pulley belt.	Examine the machine and remove the cause of the fault.
		The parameters are incorrect for the load.	Adjust *L6-02 [Torque Detection Level 1]* and *L6-03 [Torque Detection Time 1]* settings.

Note:
• The drive detects this fault if the drive output current is less than the level set in *L6-02* for longer than *L6-03*.
• Do a Fault Reset to clear the fault.
• If the drive detects this fault, it will operate the motor as specified by the stopping method set in *L6-01 [Torque Detection Selection 1]*.

Code	Name	Causes	Possible Solutions
UL4	Undertorque Detection 2	A fault occurred on the machine. Example: There is a broken pulley belt.	Examine the machine and remove the cause of the fault.
		The parameters are incorrect for the load.	Adjust *L6-05 [Torque Detection Level 2]* and *L6-06 [Torque Detection Time 2]* settings.

Note:
• The drive detects this fault if the drive output current is less than the level set in *L6-05* for longer than *L6-06*.
• Do a Fault Reset to clear the fault.
• If the drive detects this fault, it will operate the motor as specified by the stopping method set in *L6-04 [Torque Detection Selection 2]*.

Code	Name	Causes	Possible Solutions
Uv1	DC Bus Undervoltage	There is a phase loss in the drive input power.	Correct errors with the wiring for main circuit drive input power.
		There is loose wiring in the drive input power terminals.	Tighten the terminal screws to the correct tightening torque.
		The drive input power voltage is changing too much.	• Examine the input power for problems. • Make the drive input power stable. • If the input power supply is good, examine the magnetic contactor on the main circuit side for problems.
		There was a loss of power.	Use a better power supply.
		The main circuit capacitors have become unserviceable.	Examine the capacitor maintenance time in monitor *U4-05 [CapacitorMaintenance]*. If *U4-05* is more than 90%, replace the control board or the drive. Contact Yaskawa or your nearest sales representative to replace the control board.
		There is damage to the relay or contactor on the soft-charge bypass relay.	Monitor *U4-06 [PreChargeRelayMainte]* shows the performance life of the soft-charge bypass relay. If *U4-06* is more than 90%, replace the board or the drive. Contact Yaskawa or your nearest sales representative to replace the control board.

Note:
• The drive detects this error if the DC bus voltage decreases below the level set in *L2-05 [Undervoltage Detection Lvl (Uv1)]* while the drive is running.
• The *Uv1* detection level is approximately 190 V for 200 V class drives. The *Uv1* detection level is approximately 380 V for 400 V class drives. The detection level is approximately 350 V when *E1-01 [Input AC Supply Voltage]* < 400.
• Do a Fault Reset to clear the fault.
• Fault trace is not available for these faults.

Code	Name	Causes	Possible Solutions
Uv2	Control Power Undervoltage	A drive hardware problem occurred.	• Re-energize the drive. • If the fault stays, replace the control board or the drive. Contact Yaskawa or your nearest sales representative to replace the control board.

Note:
• The drive detects this error if the control power supply voltage decreases.
• Do a Fault Reset to clear the fault.
• Fault trace is not available for these faults.

Code	Name	Causes	Possible Solutions
Uv3	Soft Charge Answerback Fault	There is damage to the relay or contactor on the soft-charge bypass relay.	• Re-energize the drive. • If the fault stays, replace the control board or the drive. • Monitor *U4-06 [PreChargeRelayMainte]* shows the performance life of the soft-charge bypass relay. If *U4-06* is more than 90%, replace the board or the drive. Contact Yaskawa or your nearest sales representative to replace the control board.
		Air inside the drive is too hot.	Decrease the ambient temperature of the drive.

Note:
• Do a Fault Reset to clear the fault.
• Fault trace is not available for these faults.

7.5 Minor Faults/Alarms

This section gives information about the causes and possible solutions when a minor fault or alarm occurs. Use the information in this table to remove the cause of the minor fault or alarm.

Code	Name	Causes	Possible Solutions
bAT	Keypad Battery Low Voltage	The keypad battery voltage is low.	Replace the keypad battery.
Note: • If the drive detects this error, the terminal set to *H2-01 to H2-05 = 10 [MFDO Function Selection = Alarm]* will activate. • Set *o4-24 [bAT Detection Selection]* to enable and disable *bAT* detection.			
Code	**Name**	**Causes**	**Possible Solutions**
bb	Baseblock	An external baseblock command was entered through one of the MFDI terminals Sx, and the drive output stopped as shown by an external baseblock command.	Examine the external sequence and timing of the baseblock command input.
Note: The drive will not output a minor fault signal for this alarm.			
Code	**Name**	**Causes**	**Possible Solutions**
bCE	Bluetooth Communication Error	The smartphone or tablet with DriveWizard Mobile installed is too far from the keypad.	Use the smartphone or tablet 10 m (32.8 ft) or nearer to the keypad. **Note:** *bCE* can occur when the smartphone or tablet is 10 m (32.8 ft) or nearer to the keypad depending on the specifications of the smartphone or tablet.
		Radio waves from a different device are causing interference with communications between the smartphone or tablet and keypad.	Make sure that no device around the keypad uses the same radio bandwidth (2400 MHz to 2480 MHz), and prevent radio interference.
Note: • The drive detects this error when you use the Bluetooth LCD keypad to operate the drive from a smartphone or tablet. • If the drive detects this error, the terminal set to *H2-01 to H2-05 = 10 [MFDO Function Selection = Alarm]* will activate.			
Code	**Name**	**Causes**	**Possible Solutions**
boL	Braking Transistor Overload	The duty cycle of the braking transistor is high (the regeneration power or repetition frequency is high).	• Install a braking unit (CDBR series). • Install a regenerative converter. • Increase the deceleration time.
		You enabled the protective function for the braking transistor when you have a regenerative converter.	Set *L8-55 = 0 [Internal DB TransistorProtection = RF Disabled/ BOL Disabled]*.
		The braking transistor in the drive is broken.	Replace the drive.
Note: If the drive detects this error, the terminal set to *H2-01 to H2-05 = 10 [MFDO Function Selection = Alarm]* will activate.			
Code	**Name**	**Causes**	**Possible Solutions**
brTC	During Brake Torque Check	The MFDO terminal set for *H2-xx = 5D [During Brake Torque Check]* is active and speed reference is ON.	This code identifies that the drive is running in brake torque check mode. When the brake torque check is successfully completed, the display on the keypad will change to *"brEnd"*
Code	**Name**	**Causes**	**Possible Solutions**
bUS	Option Communication Error	The communications cable wiring is incorrect.	Correct wiring errors.
		There is a short-circuit in the communications cable or the communications cable is not connected.	• Repair short circuits and connect cables. • Replace the defective communications cable.
		Electrical interference caused a communication data error.	• Examine the control circuit lines, main circuit lines, and ground wiring, and decrease the effects of electrical interference. • Make sure that a magnetic contactor is not the source of the electrical interference, then use a Surge Protective Device if necessary. • Use only the recommended cables or other shielded line. Ground the shield on the controller side or the drive input power side. • Separate the communication wiring from drive power lines, and install a noise filter to the input side of the power supply for communication. • Decrease the effects of electrical interference from the controller.
		The option card is incorrectly installed to the drive.	Correctly install the option card to the drive.
		The option card is damaged.	If the alarm continues and the wiring is correct, replace the option card.
Note: • The drive detects this error if the Up/Down command or speed reference is assigned to the option card. • If the drive detects this error, the terminal set to *H2-01 to H2-05 = 10 [MFDO Function Selection = Alarm]* will activate. • If the drive detects this error, it will operate the motor as specified by the stopping method set in *F6-01 [Communication Error Selection]*.			

Code	Name	Causes	Possible Solutions
bUSy	Busy	You set the drive to use MEMOBUS/Modbus communications to change parameters, but you used the keypad to change parameters.	Use MEMOBUS/Modbus communications to enter the enter command, then use the keypad to change the parameter.
		You tried to change a parameter while the drive was changing setting.	Wait until the process is complete.

Code	Name	Causes	Possible Solutions
CALL	Serial Comm Transmission Error	The communications cable wiring is incorrect.	Correct wiring errors.
		There is a short-circuit in the communications cable or the communications cable is not connected.	• Repair the short-circuited or disconnected portion of the cable. • Replace the defective communications cable.
		A programming error occurred on the controller side.	Examine communications at start-up and correct programming errors.
		There is damage to the communications circuitry.	• Do a self-diagnostics check. • If the problem continues, replace the control board or the drive. Contact Yaskawa or your nearest sales representative to replace the control board.
		The termination resistor setting for MEMOBUS/Modbus communications is incorrect.	On the last drive in a MEMOBUS/Modbus network, set DIP switch S2 to the ON position to enable the termination resistor.

Note:
• The drive detects this error if it does not correctly receive control data from the controller when energizing the drive.
• If the drive detects this error, the terminal set to *H2-01 to H2-05 = 10 [MFDO Function Selection = Alarm]* will activate.

Code	Name	Causes	Possible Solutions
CE	Modbus Communication Error	The communications cable wiring is incorrect.	Correct wiring errors.
		There is a short-circuit in the communications cable or the communications cable is not connected.	• Repair short circuits and connect cables. • Replace the defective communications cable.
		Electrical interference caused a communication data error.	• Examine the control circuit lines, main circuit lines, and ground wiring, and decrease the effects of electrical interference. • Make sure that a magnetic contactor is not the source of the electrical interference, then use a Surge Protective Device if necessary. • Use only the recommended cables or other shielded line. Ground the shield on the controller side or the drive input power side. • Separate the communication wiring from drive power lines, and install a noise filter to the input side of the power supply for communication. • Decrease the effects of electrical interference from the controller.
		The communication protocol is not compatible.	• Examine the values set in *H5-xx*. • Examine the settings on the controller side and correct the difference in communication conditions.
		The value set in *H5-09 [CE Detection Time]* is too small for the communications cycle.	• Change the controller software settings. • Increase the value set in *H5-09*.
		The controller software or hardware is causing a communication problem.	Examine the controller and remove the cause of the problem.

Note:
• The drive detects this error if it does not correctly receive control data for the *CE* detection time set to *H5-09*.
• If the drive detects this error, the terminal set to *H2-01 to H2-05 = 10 [MFDO Function Selection = Alarm]* will activate.
• If the drive detects this error, it will operate the motor as specified by the stopping method set in *H5-04 [Communication Error Stop Method]*.

Code	Name	Causes	Possible Solutions
CrST	Remove Up/Down Command to Reset	The drive received a fault reset command when an Up/Down command was active.	Turn off the Up/Down command then de-energize and re-energize the drive.

Code	Name	Causes	Possible Solutions
CyPo	Cycle Power to Accept Changes	Although *F6-15 = 1 [Comm. Option Parameters Reload = Reload Now]*, the drive does not update the communication option parameters.	Re-energize the drive to update the communication option parameters.

Code	Name	Causes	Possible Solutions
dEv	Speed Deviation	The load is too heavy.	Decrease the load.
		Acceleration and deceleration ramps are set too fast.	Increase the values set in *C1-01 to C1-08 [Acceleration/Deceleration Ramps]*.
		The *dEv* detection level settings are incorrect.	Adjust *F1-10 [Speed Deviation Detection Level]* and *F1-11 [Speed Deviation Detect DelayTime]*.
		The load is locked up.	Examine the machine.

Code	Name	Causes	Possible Solutions
		The holding brake is stopping the motor.	Release the holding brake.

Note:
• The drive detects this error if the difference between the detected speed and the speed reference is more than the setting of *F1-10* for longer than *F1-11*.
• If the drive detects this error, the terminal set to *H2-01 to H2-05 = 10 [MFDO Function Selection = Alarm]* will activate.
• If the drive detects this error, it will operate the motor as specified by the stopping method set in *F1-04 [Speed Deviation Detection Select]*.

Code	Name	Causes	Possible Solutions
EF	Up/Down Command Input Error	An Up command and a Down command were input at the same time for longer than 0.5 s.	Examine the Up and Down command sequence and correct the problem.

Note:
• If the drive detects *EF*, the motor will ramp to stop.
• If the drive detects this error, the terminal set to *H2-01 to H2-05 = 10 [MFDO Function Selection = Alarm]* will activate.

Code	Name	Causes	Possible Solutions
EF0	Option Card External Fault	The communication option card received an external fault from the controller.	1. Find the device that caused the external fault and remove the cause. 2. Clear the external fault input from the controller.
		A programming error occurred on the controller side.	Examine the operation of the controller program.

Note:
• The drive detects this error if the alarm function on the external device side is operating.
• If the drive detects this error, the terminal set to *H2-01 to H2-05 = 10 [MFDO Function Selection = Alarm]* will activate.
• If the drive detects this error, it will operate the motor as specified by the stopping method set in *F6-03 [Comm External Fault (EF0) Select]*.

Code	Name	Causes	Possible Solutions
EF3	External Fault (Terminal S3)	MFDI terminal S3 caused an external fault through an external device.	1. Find the device that caused the external fault and remove the cause. 2. Clear the external fault input in the MFDI.
		The wiring is incorrect.	Correctly connect the signal line to MFDI terminal S3.
		External Fault [H1-03 = 2C to 2F] is set to MFDI terminal S3, but the terminal is not in use.	Correctly set the MFDI.

Note:
If the drive detects this error, the terminal set to *H2-01 to H2-05 = 10 [MFDO Function Selection = Alarm]* will activate.

Code	Name	Causes	Possible Solutions
EF4	External Fault (Terminal S4)	MFDI terminal S4 caused an external fault through an external device.	1. Find the device that caused the external fault and remove the cause. 2. Clear the external fault input in the MFDI.
		The wiring is incorrect.	Correctly connect the signal line to MFDI terminal S4.
		External Fault [H1-04 = 2C to 2F] is set to MFDI terminal S4, but the terminal is not in use.	Correctly set the MFDI.

Note:
If the drive detects this error, the terminal set to *H2-01 to H2-05 = 10 [MFDO Function Selection = Alarm]* will activate.

Code	Name	Causes	Possible Solutions
EF5	External Fault (Terminal S5)	MFDI terminal S5 caused an external fault through an external device.	1. Find the device that caused the external fault and remove the cause. 2. Clear the external fault input in the MFDI.
		The wiring is incorrect.	Correctly connect the signal line to MFDI terminal S5.
		External Fault [H1-05 = 2C to 2F] is set to MFDI terminal S5, but the terminal is not in use.	Correctly set the MFDI.

Note:
If the drive detects this error, the terminal set to *H2-01 to H2-05 = 10 [MFDO Function Selection = Alarm]* will activate.

Code	Name	Causes	Possible Solutions
EF6	External Fault (Terminal S6)	MFDI terminal S6 caused an external fault through an external device.	1. Find the device that caused the external fault and remove the cause. 2. Clear the external fault input in the MFDI.
		The wiring is incorrect.	Correctly connect the signal line to MFDI terminal S6.
		External Fault [H1-06 = 2C to 2F] is set to MFDI terminal S6, but the terminal is not in use.	Correctly set the MFDI.

Note:
If the drive detects this error, the terminal set to *H2-01 to H2-05 = 10 [MFDO Function Selection = Alarm]* will activate.

Code	Name	Causes	Possible Solutions
EF7	External Fault (Terminal S7)	MFDI terminal S7 caused an external fault through an external device.	1. Find the device that caused the external fault and remove the cause. 2. Clear the external fault input in the MFDI.
		The wiring is incorrect.	Correctly connect the signal line to MFDI terminal S7.

Code	Name	Causes	Possible Solutions
		External Fault [H1-07 = 2C to 2F] is set to MFDI terminal S7, but the terminal is not in use.	Correctly set the MFDI.

Note:
If the drive detects this error, the terminal set to *H2-01 to H2-05 = 10 [MFDO Function Selection = Alarm]* will activate.

Code	Name	Causes	Possible Solutions
EF8	External Fault (Terminal S8)	MFDI terminal S8 caused an external fault through an external device.	1. Find the device that caused the external fault and remove the cause. 2. Clear the external fault input in the MFDI.
		The wiring is incorrect.	Correctly connect the signal line to MFDI terminal S8.
		External Fault [H1-08 = 2C to 2F] is set to MFDI terminal S8, but the terminal is not in use.	Correctly set the MFDI.

Note:
If the drive detects this error, the terminal set to *H2-01 to H2-05 = 10 [MFDO Function Selection = Alarm]* will activate.

Code	Name	Causes	Possible Solutions
EF9	External Fault (Terminal S9)	MFDI terminal S9 caused an external fault through an external device.	1. Find the device that caused the external fault and remove the cause. 2. Clear the external fault input in the MFDI.
		The wiring is incorrect.	Correctly connect the signal line to MFDI terminal S9.
		External Fault [H1-09 = 2C to 2F] is set to MFDI terminal S9, but the terminal is not in use.	Correctly set the MFDI.

Note:
If the drive detects this error, the terminal set to *H2-01 to H2-05 = 10 [MFDO Function Selection = Alarm]* will activate.

Code	Name	Causes	Possible Solutions
EF10	External Fault (Terminal S10)	MFDI terminal S10 caused an external fault through an external device.	1. Find the device that caused the external fault and remove the cause. 2. Clear the external fault input in the MFDI.
		The wiring is incorrect.	Correctly connect the signal line to MFDI terminal S10.
		External Fault [H1-10 = 2C to 2F] is set to MFDI terminal S10, but the terminal is not in use.	Correctly set the MFDI.

Note:
If the drive detects this error, the terminal set to *H2-01 to H2-05 = 10 [MFDO Function Selection = Alarm]* will activate.

Code	Name	Causes	Possible Solutions
EP24v	External Power 24V Supply	The voltage of the main circuit power supply decreased, and the 24 V power supply is supplying power to the drive.	• Examine the main circuit power supply. • Turn ON the main circuit power supply to run the drive.

Note:
• Set *o2-26 [Ext. Power 24V Supply Display]* to enable or disable *EP24v* detection.
• The drive will not output an alarm signal for this alarm.

Code	Name	Causes	Possible Solutions
FAn	Internal Fan Fault	The circulation fan stopped operating correctly.	• Examine circulation fan operation. • Re-energize the drive. • Examine *U4-03 [Cooling Fan Ope Time]* and *U4-04 [Cool Fan Maintenance]*. If the performance life of the circulation fan is expired or if there is damage to the fan, replace the fan.

Note:
If the drive detects this error, the terminal set to *H2-01 to H2-05 = 10 [MFDO Function Selection = Alarm]* will activate.

Code	Name	Causes	Possible Solutions
HCA	High Current Alarm	The load is too heavy.	• Decrease the load for applications with repetitive starts and stops. • Replace the drive with a larger capacity model.
		The acceleration ramp is too fast.	• Calculate the torque necessary during acceleration related to the load inertia and the specified acceleration ramp. • Increase the values set in *C1-01, C1-03, C1-05, or C1-07 [Acceleration Ramps]* until you get the necessary torque. • Increase the values set in *C2-01 to C2-04 [Jerk Characteristics]* until you get the necessary torque. • Replace the drive with a larger capacity model.
		The drive is trying to operate a specialized motor or a motor that is larger than the maximum applicable motor output of the drive.	• Examine the motor nameplate, the motor, and the drive to make sure that the continuous rated current of the drive is larger than the motor rated current. • Replace the drive with a larger capacity model.

Note:
• The drive detects this error if the drive output current is more than the overcurrent alarm level (150% of the continuous rated output current).
• If the drive detects this error, the terminal set to *H2-01 to H2-05 = 10 [MFDO Function Selection = Alarm]* will activate.

Code	Name	Causes	Possible Solutions
L24v	Loss of External Power 24 Supply	The voltage of the backup 24 V power supply has decreased. The main circuit power supply is operating correctly.	• Examine the external 24 V power supply for disconnected wires and wiring errors and repair the problems. • Examine the external 24 V power supply for problems.

Note:
• Set *o2-23 [External 24V Powerloss Detection]* to enable or disable *L24v* detection.
• The drive will not output an alarm signal for this alarm.

Code	Name	Causes	Possible Solutions
LoG	Com Error / Abnormal SD card	There is not a micro SD in the keypad.	Put a micro SD card in the keypad.
		• The drive is connected to USB. • The number of log communication files is more than 1000. • The micro SD card does not have available memory space. • The line number data in a log communication file is not correct. • A communication error between the keypad and drive occurred during a log communication.	Set *o5-01 = 0 [Log Start/Stop Selection = OFF]*.

Note:
If the drive detects this error, the terminal set to *H2-01 to H2-05 = 6A [MFDO Function Selection = Data Logger Error]* will activate.

Code	Name	Causes	Possible Solutions
LT-1	Cooling Fan Maintenance Time	The cooling fan is at 90% of its expected performance life.	1. Replace the cooling fan. 2. Set *o4-03 = 0 [Fan Operation Time Setting = 0 h]* to reset the cooling fan operation time.

Note:
• When the estimated performance life is expired, the terminal set to *H2-01 to H2-05 = 2F [MFDO Function Selection = Maintenance Notification]* will activate.
• Set *o4-16 [Maintenance Monitoring Selection]* to enable and disable *LT-1 [Cooling Fan Maintenance Time]* to *LT-4 [IGBT Maintenance Time]*.

Code	Name	Causes	Possible Solutions
LT-2	Capacitor Maintenance Time	The capacitors for the main circuit and control circuit are at 90% of expected performance life.	Replace the control board or the drive. Contact Yaskawa or your nearest sales representative to replace the control board.

Note:
• When the estimated performance life is expired, the terminal set to *H2-01 to H2-05 = 2F [MFDO Function Select = Maintenance Notification]* will activate.
• Set *o4-16 [Maintenance Monitoring Selection]* to enable and disable *LT-1 [Cooling Fan Maintenance Time]* to *LT-4 [IGBT Maintenance Time]*.

Code	Name	Causes	Possible Solutions
LT-3	SoftChargeBypassRelay MainteTime	The soft charge bypass relay is at 90% of its expected performance life.	Replace the control board or the drive. Contact Yaskawa or your nearest sales representative to replace the board.

Note:
• When the estimated performance life is expired, the terminal set to *H2-01 to H2-05 = 2F [MFDO Function Select = Maintenance Notification]* will activate.
• Set *o4-16 [Maintenance Monitoring Selection]* to enable and disable *LT-1 [Cooling Fan Maintenance Time]* to *LT-4 [IGBT Maintenance Time]*.

Code	Name	Causes	Possible Solutions
LT-4	IGBT Maintenance Time	The IGBT is at 90% of its expected performance life.	Check the load, carrier frequency, and output speed.

Note:
• When the estimated performance life is expired, the terminal set to *H2-01 to H2-05 = 2F [MFDO Function Select = Maintenance Notification]* will activate.
• Set *o4-16 [Maintenance Monitoring Selection]* to enable and disable *LT-1 [Cooling Fan Maintenance Time]* to *LT-4 [IGBT Maintenance Time]*.

Code	Name	Causes	Possible Solutions
oH	Heatsink Overheat	The ambient temperature is high and the heatsink temperature is more than the *L8-02 [Overheat Alarm Level]*.	• Measure the ambient temperature. • Increase the airflow around the drive. • Install a cooling device (cooling fan or air conditioner) to lower the ambient temperature. • Remove objects near the drive that are producing too much heat.
		There is not sufficient airflow around the drive.	• Give the drive the correct installation space as shown in the manual. • Make sure that there is sufficient circulation around the control panel. • Examine the drive for dust or other unwanted materials that could clog the cooling fan. • Remove unwanted materials that prevent air circulation.
		The internal cooling fan or fans have stopped.	1. Use the procedures in this manual to replace the cooling fan. 2. Set *o4-03 = 0 [Fan Operation Time Setting = 0 h]* to reset the cooling fan operation time.

Note:
• The drive detects this error if the heatsink temperature of the drive is more than *L8-02*.
• If the drive detects this error, the terminal set to *H2-01 to H2-05 = 10 [MFDO Function Selection = Alarm]* will activate.
• If the drive detects this error, it will operate the motor as specified by the stopping method set in *L8-03 [Overheat Pre-Alarm Selection]*.

Code	Name	Causes	Possible Solutions
oH3	Motor Overheat (PTC Input)	The thermistor wiring that detects motor temperature is defective.	Correct wiring errors.
		A fault occurred on the machine. Example: The machine is locked.	Examine the machine and remove the cause of the fault.
		The motor has overheated.	• Examine the load levels, acceleration/deceleration ramps, and motor start/stop frequencies (cycle times). • Decrease the load. • Increase the values set in *C1-01 to C1-08 [Acceleration/ Deceleration Ramps]*. • Set *E2-01 [Motor Rated Current (FLA)]* correctly to the value specified by the motor nameplate. • Make sure that the motor cooling system is operating correctly, and repair or replace it if it is damaged. • Adjust *E1-04 to E1-10 [V/f Pattern Parameters]*. For motor 2, adjust *E3-04 to E3-10*. Decrease the values set in *E1-08 [Mid Point A Voltage]* and *E1-10 [Minimum Output Voltage]*. **Note:** If the values set in *E1-08* and *E1-10* are too low, the overload tolerance will decrease at low speeds.

Note:
• When *H3-02, H3-10, or H3-06 = E [MFAI Function Selection = Motor Temperature (PTC Input)]*, the drive detects this alarm if the motor overheat signal entered to an analog input terminal A1, A2, or A3 is more than the alarm detection level.
• If the drive detects this error, the terminal set to *H2-01 to H2-05 = 10 [MFDO Function Selection = Alarm]* will activate.
• If the drive detects this error, it will operate the motor as specified by the stopping method set in *L1-03 [Motor Thermistor oH Alarm Select]*.

Code	Name	Causes	Possible Solutions
oL3	Overtorque 1	A fault occurred on the machine. Example: The machine is locked.	Examine the machine and remove the cause of the fault.
		The parameters are incorrect for the load.	Adjust *L6-02 [Torque Detection Level 1]* and *L6-03 [Torque Detection Time 1]* settings.

Note:
• The drive detects this error if the drive output current is more than the level set in *L6-02* for longer than *L6-03*.
• If the drive detects this error, the terminal set to *H2-01 to H2-05 = 10 [MFDO Function Selection = Alarm]* will activate.
• Set the conditions that trigger the minor fault using *L6-01 [Torque Detection Selection 1]*.

Code	Name	Causes	Possible Solutions
oL4	Overtorque 2	A fault occurred on the machine. Example: The machine is locked.	Examine the machine and remove the cause of the fault.
		The parameters are incorrect for the load.	Adjust *L6-05 [Torque Detection Level 2]* and *L6-06 [Torque Detection Time 2]* settings.

Note:
• The drive detects this error if the drive output current is more than the level set in *L6-05* for longer than *L6-06*.
• If the drive detects this error, the terminal set to *H2-01 to H2-05 = 10 [MFDO Function Selection = Alarm]* will activate.
• Set the conditions that trigger the minor fault using *L6-04 [Torque Detection Selection 2]*.

Code	Name	Causes	Possible Solutions
oS	Overspeed	There is overshoot.	Decrease *C5-01 [ASR Proportional Gain 1]* and increase *C5-02 [ASR Integral Time 1]*.
		The *oS* detection level is set incorrectly.	Adjust *F1-08 [Overspeed Detection Level]* and *F1-09 [Overspeed Detection Delay Time]*.

Note:
• The drive detects this error if the motor speed is more than the value set in *F1-08* for longer than *F1-09*.
• If the drive detects this error, the terminal set to *H2-01 to H2-05 = 10 [MFDO Function Selection = Alarm]* will activate.
• If the drive detects this error, it will operate the motor as specified by the stopping method set in *F1-03 [Overspeed Detection Selection]*.

Code	Name	Causes	Possible Solutions
ov	DC Bus Overvoltage	There are surge voltages in the input power supply.	Connect a DC reactor to the drive. **Note:** If you turn the phase advancing capacitors ON and OFF and use thyristor converters in the same power supply system, there can be surge voltages that irregularly increase the input voltage.
		The drive output cable or motor is shorted to ground (the current short to ground is charging the main circuit capacitor of the drive through the power supply).	1. Examine the motor main circuit cable, terminals, and motor terminal box, and then remove ground faults. 2. Re-energize the drive.
		The power supply voltage is too high.	Decrease the power supply voltage to match the drive rated voltage.
		Electrical interference caused a drive malfunction.	• Examine the control circuit lines, main circuit lines, and ground wiring, and decrease the effects of electrical interference. • Make sure that a magnetic contactor is not the source of the electrical interference, then use a Surge Protective Device if necessary. • Set *L5-01 ≠ 0 [Number of Auto Reset Attempts ≠ 0 times]*.

Code	Name	Causes	Possible Solutions
		The drive detects *ov [Overvoltage]* when: • The acceleration completes • The deceleration starts • The load changes suddenly	Increase the value set in *n2-03 [Automatic Freq Regulator Time 2]* in 50 ms increments. **Note:** Make sure that you set *n2-02 ≤ n2-03*.

Note:
• The drive detects this error if the DC bus voltage is more than the *ov* detection level when there is no Up/Down command (while the drive is stopped).
• For 200 V class drives, the detection level of *ov* is approximately 410 V. For 400 V class drives, the detection level of *ov* is approximately 820 V.
• If the drive detects this error, the terminal set to *H2-01 to H2-05 = 10 [MFDO Function Selection = Alarm]* will activate.

Code	Name	Causes	Possible Solutions
ovEr	Too Many Parameters Changed	You tried to change more than 150 parameters.	Make sure that parameters that do not have an effect on drive operation are at their default settings. **Note:** • You can change 150 parameters maximum. • If you change parameters that have dependencies, the drive can detect *ovEr* when the number of changed parameters is fewer than 150.

Code	Name	Causes	Possible Solutions
PASS	Modbus Communication Test	The MEMOBUS/Modbus communications test is complete.	The *PASS* display will turn off after communications test mode is cleared.

Code	Name	Causes	Possible Solutions
PF	Input Phase Loss	There is a phase loss in the drive input power.	Correct all wiring errors with the main circuit power supply.
		Loose wiring in the input power terminals.	Tighten the terminal screws to the correct tightening torque.
		The drive input power voltage is changing too much.	• Examine the supply voltage for problems. • Make the drive input power stable.
		Unsatisfactory balance between voltage phases.	• Examine the supply voltage for problems. • Make the drive input power stable. • If the supply voltage is good, examine the magnetic contactor on the main circuit side for problems.
		The main circuit capacitors have become unserviceable.	• Examine the capacitor maintenance time in monitor *U4-05 [CapacitorMaintenance]*. • If *U4-05* is more than 90%, replace the capacitor. Contact Yaskawa or your nearest sales representative for more information.
			• Examine the supply voltage for problems. • Re-energize the drive. • If the alarm stays, replace the circuit board or the drive. Contact Yaskawa or your nearest sales representative for more information.

Note:
• The drive detects this error if the DC bus voltage changes irregularly without regeneration.
• If the drive detects this error, the terminal set to *H2-01 to H2-05 = 10 [MFDO Function Selection = Alarm]* will activate.
• Use *L8-05 [Input Phase Loss Protection Sel]* to enable and disable *PF* detection.

Code	Name	Causes	Possible Solutions
PGo	Encoder (PG) Feedback Loss	The encoder cable is disconnected or wired incorrectly.	Examine for wiring errors or disconnected wires in the encoder cable, and repair problems.
		The encoder is not receiving power.	Examine the encoder power supply.
		The holding brake is stopping the motor.	Release the holding brake.

Note:
• The drive detects this error if it does not receive the speed detection pulse signal from the encoder in the detection time set in *F1-14 [Encoder Open-Circuit Detect Time]*.
• If the drive detects this error, the terminal set to *H2-01 to H2-05 = 10 [MFDO Function Selection = Alarm]* will activate.
• If the drive detects this error, it will operate the motor as specified by the stopping method set in *F1-02 [Encoder Signal Loss Detect Sel]*.

Code	Name	Causes	Possible Solutions
PGoH	Encoder (PG) Hardware Fault	The encoder cable is disconnected.	Repair any disconnected wires in the encoder cable.

Note:
• If the drive detects this error, the terminal set to *H2-01 to H2-05 = 10 [MFDO Function Selection = Alarm]* will activate.
• Parameter *F1-20 [Encoder 1 PCB Disconnect Detect]* enables and disables *PGoH* detection.
• If the drive detects this error, it will operate the motor as specified by the stopping method set in *F1-02 [Encoder Signal Loss Detect Sel]*.

Code	Name	Causes	Possible Solutions
rUn	Motor Switch during Run	The drive received a *Motor 2 Selection [H1-xx = 16]* signal during run.	Make sure that the drive receives the Motor 2 Selection signal while the drive is stopped.

Note:
If the drive detects this error, the terminal set to *H2-01 to H2-05 = 10 [MFDO Function Selection = Alarm]* will activate.

Code	Name	Causes	Possible Solutions
SE	Modbus Test Mode Error	MEMOBUS/Modbus communications self-diagnostics *[H1-xx = 67]* was done while the drive was running.	Stop the drive and do MEMOBUS/Modbus communications self-diagnostics.

Note:
If the drive detects this error, the terminal set to *H2-01 to H2-05 = 10 [MFDO Function Selection = Alarm]* will activate.

Code	Name	Causes	Possible Solutions
STo	Safe Torque OFF	Safe Disable inputs H1-HC and H2-HC are open.	• Make sure that the Safe Disable signal is input from an external source to terminal H1-HC and H2-HC. • When the Safe Disable function is not in use, connect terminals H1-HC and H2-HC.
		There is internal damage to the two Safe Disable channels.	Replace the board or the drive. Contact Yaskawa or your nearest sales representative to replace the control board.

Note:
• The drive will not output an alarm signal for this alarm.
• If the drive detects this condition, the terminal set to *H2-01 to H2-05 = 21 [MFDO Function Selection = Safe Torque OFF]* will activate.

Code	Name	Causes	Possible Solutions
SToF	Safe Torque OFF	One of the two terminals H1-HC or H2-HC received the Safe Disable input signal.	• Make sure that the Safe Disable signal is input from an external source to terminals H1-HC or H2-HC. • When the Safe Disable function is not in use, connect terminals H1-HC and H2-HC.
		The Safe Disable input signal is wired incorrectly.	
		There is internal damage to one Safe Disable channel.	Replace the board or the drive. Contact Yaskawa or your nearest sales representative to replace the control board.

Note:
If the drive detects this error, the terminal set to *H2-01 to H2-05 = 10 [MFDO Function Selection = Alarm]* will activate.

Code	Name	Causes	Possible Solutions
TCA	TDCC Alarm	The Travel Direction Change Counter (TDCC) reached the alarm level set in *o4-41 [Travel Direct Counter AlarmLevel]* and it is necessary to replace the elevator ropes soon.	1. Replace the elevator ropes. 2. Enter the defined password in *o4-44 [Travel Direct ChgCntr Passwd Set]*. **Note:** If you forgot the password, contact Yaskawa or your nearest sales representative. 3. Set *o4-42 [TravelDirectChange Cnt PresetLvl]* to reset the TDCC value. **Note:** Calculate and set a correct value to *o4-42* according to EN81.50 or other applicable definitions. 4. Use *U4-64 [RemainDirect ChngLow]* and *U4-65 [RemainDirectChngHigh]* to make sure that the set value is correct. 5. Log the executed action and the related data in the maintenance logbook of your facility.

Note:
• The drive detects this alarm if the MFDO terminal set for *H2- xx = 76 [TDCC Alarm Level Reached]* is active.
• If the drive detects this error, the terminal set to *H2-01 to H2-05 = 10 [MFDO Function Selection = Alarm]* will activate.
• Even if the drive detects this alarm, the drive can continue to operate normally until the counter reaches 0.
• If *TCS [TDCC Setup]* occurs, the drive will not detect this alarm at the same time.

Code	Name	Causes	Possible Solutions
TCS	TDCC Setup	You set *o4-40 = 1 [Travel Direct Change CounterEnbl = Enabled]* to activate the Travel Direction Change Counter and you have not set a password.	Set a password in *o4-44 [Travel Direct ChgCntr Passwd Set]*.

Note:
• The drive detects this alarm if the TDCC is activated but the password has not been defined.
• If the drive detects this error, the terminal set to *H2-01 to H2-05 = 10 [MFDO Function Selection = Alarm]* will activate.
• This alarm has higher priority than *TCA [TDCC Alarm]*.

Code	Name	Causes	Possible Solutions
TiM	Keypad Time Not Set	You put a battery in the keypad, but you have not set the date and time.	Use the keypad to set the date and time.

Note:
• Parameter *o4-24 [bAT Detection Selection]* enables and disables *TiM* detection.
• If the drive detects this error, the terminal set to *H2-01 to H2-05 = 10 [MFDO Function Selection = Alarm]* will activate.

Code	Name	Causes	Possible Solutions
UL3	Undertorque Detection 1	A fault occurred on the machine. Example: There is a broken pulley belt.	Examine the machine and remove the cause of the fault.
		The parameters are incorrect for the load.	Adjust *L6-02 [Torque Detection Level 1]* and *L6-03 [Torque Detection Time 1]* settings.

Note:
• The drive detects this error if the drive output current is less than the level set in *L6-02* for longer than *L6-03*.
• If the drive detects this error, the terminal set to *H2-01 to H2-05 = 10 [MFDO Function Selection = Alarm]* will activate.
• If the drive detects this error, it will operate the motor as specified by the stopping method set in *L6-01 [Torque Detection Selection 1]*.

Code	Name	Causes	Possible Solutions
UL4	Undertorque Detection 2	A fault occurred on the machine. Example: There is a broken pulley belt.	Examine the machine and remove the cause of the fault.
		The parameters are incorrect for the load.	Adjust *L6-05 [Torque Detection Level 2]* and *L6-06 [Torque Detection Time 2]* settings.

Note:
• The drive detects this error if the drive output current is less than the level set in *L6-05* for longer than *L6-06*.
• If detected, the terminal set to *H2-01 to H2-05 = 10 [MFDO Function Selection = Alarm]* will activate.
• If the drive detects this error, it will operate the motor as specified by the stopping method set in *L6-04 [Torque Detection Selection 2]*.

Code	Name	Causes	Possible Solutions
Uv	Undervoltage	The drive input power voltage is changing too much.	• Examine the input power for problems. • Make the drive input power stable. • If the input power supply is good, examine the magnetic contactor on the main circuit side for problems.
		There is a phase loss in the drive input power.	Correct errors with the wiring for main circuit drive input power.
		There is loose wiring in the drive input power terminals.	Tighten the terminal screws to the correct tightening torque.
		There was a loss of power.	Use a better power supply.
		The main circuit capacitors have become unserviceable.	Examine the capacitor maintenance time in monitor *U4-05 [CapacitorMaintenance]*. If *U4-05* is more than 90%, replace the control board or the drive. Contact Yaskawa or your nearest sales representative to replace the control board.
		The drive input power transformer is too small and voltage drops when the power is switched on.	• Check for an alarm when a molded-case circuit breaker, Leakage Breaker (ELCB, GFCI, or RCM/RCD) (with overcurrent protective function), or magnetic contactor is ON. • Check the capacity of the drive power supply transformer.
		Air inside the drive is too hot.	Measure the ambient temperature of the drive.
		The Charge LED is broken.	Replace the board or the drive. Contact Yaskawa or your nearest sales representative to replace the control board.

Note:
• The drive detects this error if one of these conditions is correct when the Up/Down command has not been input (while the drive is stopped).
– The DC bus voltage < *L2-05 [Undervoltage Detection Lvl (Uv1)]*.
– The contactor that prevents inrush current in the drive was opened.
– There is low voltage in the control drive input power.
• If the drive detects this error, the terminal set to *H2-01 to H2-05 = 10 [MFDO Function Selection = Alarm]* will activate.

Code	Name	Causes	Possible Solutions
voF	Output Voltage Detection Alarm	Hardware is damaged.	Replace the control board or the drive. Contact Yaskawa or your nearest sales representative to replace the control board.

Note:
• The drive detects this alarm if there is a problem with the output voltage.
• If the drive detects this error, the terminal set to *H2-01 to H2-05 = 10 [MFDO Function Selection = Alarm]* will activate.

7.6 Parameter Setting Errors

Parameter setting errors occur when multiple parameter settings do not agree, or when parameter setting values are not correct. Refer to the table in this section, examine the parameter setting that caused the error, and remove the cause of the error. You must first correct the parameter setting errors before you can operate the drive. The drive will not send notification signals for the faults and alarms when these parameter setting errors occur.

Code	Name	Causes	Possible Solutions
oPE01	Drive Capacity Setting Error	The value set in *o2-04 [Drive Model (KVA) Selection]* does not agree with the drive model.	Set *o2-04* to the correct value.
Code	**Name**	**Causes**	**Possible Solutions**
oPE02	Parameter Range Setting Error	Parameter settings are not in the applicable setting range.	1. Push ↵ to show *U1-18 [oPE Fault Parameter]*, and find parameters that are not in the applicable setting range. 2. Correct the parameter settings. **Note:** If more than one error occurs at the same time, other *oPExx* errors have priority over *oPE02*.
		Set *E2-01 [Motor Rated Current (FLA)] ≤ E2-03 [Motor No-Load Current]*.	Make sure that *E2-01 > E2-03*. **Note:** If it is necessary to set *E2-01 < E2-03*, first lower the value set in *E2-03*, and then set *E2-01*.
		Set *d1-28 [Leveling Speed Detection Level] > d1-29 [Inspection Speed Detection Level]*.	Make sure that *d1-28 ≤ d1-29*.
Code	**Name**	**Causes**	**Possible Solutions**
oPE03	Multi-Function Input Setting Err	The settings for these parameters do not agree: • *F3-10 to F3-25 [Terminal D1 to DF Function Selection]* • *H1-01 to H1-10 [Terminals S1 to S10 Function Selection]*	Correct the parameter settings.
		The settings for MFDIs overlap. **Note:** This does not include these settings: • *H1-xx = 20 to 2F [MFDI Function Selection = External Fault]* and *[Reserved]* • *H1-xx = 79 and 5B [MFDI Function Selection = Brake Feedback N.O and Brake Feedback N.C.]*	Set the parameters correctly to prevent MFDI function overlap.
		There are three or more MFDIs set to *H1-xx = 79 or 5B*.	
		These commands are set in Digital Inputs (*H1-xx*, *F3-10 to F3-25*) at the same time: • Setting values *16 [Motor 2 Selection]* and *1A [Accel/Decel Ramp Selection 2]*	Remove the function settings that are not in use.
		Settings for N.C. and N.O. input *[H1-xx]* for these functions were selected at the same time: • Setting values *15 [Emergency Stop (N.O.)]* and *17 [Emergency Stop (N.C.)]* • Setting values *56 [Motor Contactor Feedback N.O.]* and *5A [Motor Contactor Feedback N.C.]*	Remove one of the function settings.
		These pairs of MFDI functions are not set to Digital Inputs (*H1-01 to H1-10 [Terminal S1 to S10 Function Selection]*): • Setting value *40 [Up Command]* • Setting value *41 [Down Command]*	Correct the parameter settings.
		One of these settings is set to two or more MFDIs (*H1-01 to H1-10*): • Setting value *40* • Setting value *41*	
		One of *H1-03 to H1-10 = 40* and *H1-01 ≠ F [Not Used]*	
		One of *H1-03 to H1-10 = 41* and *H1-02 ≠ F [Not Used]*	

Code	Name	Causes	Possible Solutions
oPE05	Run Cmd/Speed Ref Source Sel Err	The setting to assign the Up/Down command or speed reference to an option card is incorrect.	Correct the parameter settings.
		You set *b1-01 = 3 [Speed Reference Selection 1 = Option PCB]*, but there is no option card connected to the drive.	Connect an option card to the drive.
		You set *b1-02 = 3 [Up/Down Command Selection 1 = Option PCB]*, but there is no option card connected to the drive.	
		These parameters are set at the same time: • *F3-01 = 6 [Digital Input Function Selection = BCD (5-digit), 0.01 Hz]* • *F3-03 = 0, 1 [Digital Input Data Length Select = 8-bit, 12-bit]*	Set *F3-03 = 2 [16-bit]*.
Code	**Name**	**Causes**	**Possible Solutions**
oPE06	Control Method Selection Error	*A1-02 = 3 or 7 [Control Method Selection = CLV, CLV/PM]*, but there is no encoder option connected to the drive.	• Connect an encoder option to the drive. • Set *A1-02* correctly.
		You supplied external 24 V power to terminals PS-AC when: • There is an encoder option installed to the drive • The drive main circuit power supply is de-energized	1. De-energize the drive main circuit power supply and the external 24 V power supply to terminals PS-AC. 2. After the keypad display goes out, energize the drive main circuit power supply again. 3. Supply the external 24 V power to terminals PS-AC.
			When you use an encoder option, energize the drive main circuit power supply.
Code	**Name**	**Causes**	**Possible Solutions**
oPE07	Analog Input Selection Error	The settings for *H3-02, H3-06, and H3-10 [MFAI Function Selection]* overlap.	Set *H3-02, H3-06, and H3-10* correctly to prevent overlap. **Note:** It is possible to set these functions to multiple analog input terminals at the same time: • Setting value *0 [Speed Reference]* • Setting value *1F [Not Used]*
Code	**Name**	**Causes**	**Possible Solutions**
oPE08	Parameter Selection Error	You set a function that is not compatible with the control method set in *A1-02 [Control Method Selection]*.	1. Push ↵ to show *U1-18 [oPE Fault Parameter]*, and find parameters that are not in the applicable setting range. 2. Correct the parameter settings. **Note:** If more than one error occurs at the same time, other *oPExx* errors have priority over *oPE02*.
		When *A1-02 = 2 [Control Method Selection = OLV]*, you used these parameter settings: • *n2-02 > n2-03 [Automatic Freq Regulator Time 1 > Automatic Freq Regulator Time 2]* • *C4-02 [Torque Compensation Delay Time] >* 150	• Set *n2-02 < n2-03*. • Set *C4-02* < 150.
		When *A1-02 = 7 [PM Closed Loop Vector]*, you used these parameter settings: • *E5-09 = 0.0 [PM Back-EMF Vpeak (mV/(rad/s)) = 0.0 mV/(rad/s)]* • *E5-24 = 0.0 [PM Back-EMF L-L Vrms (mV/rpm) = 0.0 mV/min^{-1}]*	Set *E5-09* or *E5-24* to the correct value.
		When *A1-02 = 7*, you set *E5-09 ≠ 0* and *E5-24 ≠ 0*.	Set *E5-09 = 0* or *E5-24 = 0*.
		When *d1-18 = 0 or 3 [Speed Reference Selection Mode = Multi-speed Mode1 (d1-01 to 08) or Multi-speed Mode2 (d1-02 to 08)]*, you used one of these MFDI functions: • *H1-xx = 50 [Nominal Speed]* • *H1-xx = 51 [Intermediate Speed]* • *H1-xx = 52 [Releveling Speed]* • *H1-xx = 53 [Leveling Speed]*	Correct the parameter settings.
		When you set one of the MFDI terminals to *H1-xx = BB or 1BB [Standby or !Standby]*, you set all the MFDO terminals to *H2-xx ≠ 65 or 165 [Standby Output or !Standby Output]*.	Set one of the MFDO terminals to *H2-xx = 65 or 165*.

Code	Name	Causes	Possible Solutions
oPE10	V/f Data Setting Error	The parameters that set the V/f pattern do not satisfy these conditions: • For motor 1: *E1-09 ≤ E1-07 < E1-06 ≤ E1-11 ≤ E1-04 [Minimum Output Frequency ≤ Mid Point A Frequency < Base Frequency ≤ Mid Point B Frequency ≤ Maximum Output Frequency]* • For motor 2: *E3-09 ≤ E3-07 < E3-06 ≤ E3-11 ≤ E3-04 [Motor 2 Minimum Output Frequency ≤ Motor 2 Mid Point A Frequency < Motor 2 Base Frequency ≤ Motor 2 Mid Point B Frequency ≤ Motor 2 Maximum Output Frequency]*	Set the parameters correctly to satisfy the conditions.
Code	**Name**	**Causes**	**Possible Solutions**
oPE16	Energy Saving Constants Error	The Energy Saving parameters are not set in the applicable setting range.	Make sure that *E5-xx* is set correctly as specified by the motor nameplate data.
Code	**Name**	**Causes**	**Possible Solutions**
oPE18	Online Tuning Param Setting Err	The parameters that control online tuning are set incorrectly. In OLV control, one of these parameters was set when *n6-01 = 2 [Online Tuning Selection = Voltage Correction Tuning]*: • *E2-02 [Motor Rated Slip]* is set to 30% of the default setting or lower. • *E2-06 [Motor Leakage Inductance]* is set to 50% of the default setting or lower. • *E2-03 = 0 [Motor No-Load Current = 0 A]* has been set.	• Set *E2-02, E2-03, and E2-06* correctly. • Set *n6-01 = 0 or 1 [Disabled or Line-to-Line Resistance Tuning]*.
		You set *S3-20 [Dwell 2 Speed Reference] ≠ 0.00%* to enable the Dwell 2 function, but *S3-20 < S3-21 [Dwell 2 End Speed]*.	Set *S3-20 ≥ S3-21*.
		You set *S3-29 [Load 1 Analog Input Level] = S3-30 [Load 2 Analog Input Level]*.	Set *S3-29 ≠ S3-30*.
Code	**Name**	**Causes**	**Possible Solutions**
oPE20	PG-F3 Setting Error	The value set in *F1-01 [Encoder 1 Pulse Count (PPR)]* does not align with the number of encoder pulses.	• Examine the *F1-01* value and the number of encoder pulses. • Set *F1-01* correctly.
		The calculation encoder signal frequency at maximum speed is more than 20 kHz.	Decrease the value set for *E1-04 [Maximum Output Frequency]* and make sure that the output frequency of the encoder is not more than 20 kHz.
Code	**Name**	**Causes**	**Possible Solutions**
oPE21	Elevator Parameter Setting Fault	The DC Injection/Position Lock Time at Stop set in *S1-05 [DC Inj/Pos Lock Time at Stop] < S1-07 [Brake Close Delay Time]*.	Correct parameter settings so that *S1-05 > S1-07*.
		• The deceleration distance set in *S5-11 [Deceleration Distance@High Speed] < U4-43 [Min.Dec.Distance (H)]*. • The deceleration distance set in *S5-14 [Decel Distance @ Mid Speed] < U4-47 [Min.Dec. Distance (M)]*. • The deceleration distance set in *S5-15 [Decel Distance @ Low Speed] < U4-48 [Min.Dec. Distance (L)]*. • The stop distance set in *S5-12 [Up Stopping Distance] < U4-44 [Min.Stop Distance]*. • The stop distance set in *S5-19 [Down Stopping Distance] < U4-44*.	• Correct parameter settings so that *S5-11 > U4-43*. • Correct parameter settings so that *S5-14 > U4-47*. • Correct parameter settings so that *S5-15 > U4-48*. • Correct parameter settings so that *S5-12 > U4-44*. • Correct parameter settings so that *S5-19 > U4-44*.
		Both *S5-10 [Leveling Stop Method Selection]* and *S5-01 [Short Floor Operation Selection]* are enabled at the same time.	Correct the settings in *S5-01* and *S5-10*.
		The speed level set in *S5-17 [Direct Landing Low Speed Level] ≤ S5-16 [Direct Landing Mid Speed Level]* and *S5-17 ≠ 0.00%*.	Correct parameter settings so that *S5-17 > S5-16*.
		When *S5-10 = 3 [Direct + Leveling]*, the speed level set in *S5-13 [Direct Landing Minimum Spd Level] ≤ S5-24 [Creep Start Speed]*.	Correct parameter settings so that *S5-13 > S5-24*.
		The brake torque set in *S5-32 [Applying Motor Torque During BTC]* is larger than the torque limit of the unit.	Correct the parameter setting so that torque limit of the unit > *S5-32*.

7.7 Auto-Tuning Error

This table gives information about errors detected during Auto-Tuning. If the drive detects an Auto-Tuning error, the keypad will show the error and the motor will coast to stop. The drive will not send notification signals for faults and alarms when Auto-Tuning errors occur.

Two types of Auto-Tuning errors are: *Endx* and *Erx*. *Endx* identifies that Auto-Tuning has successfully completed with calculation errors. Find and repair the cause of the error and do Auto-Tuning again, or set the motor parameters manually. You can use the drive in the application if you cannot find the cause of the *Endx* error.

Erx identifies that Auto-Tuning was not successful. Find and repair the cause of the error and do Auto-Tuning again.

Code	Name	Causes	Possible Solutions
End1	Excessive Rated Voltage Setting	The torque reference was more than 20% during Auto-Tuning or the no-load current that was measured after Auto-Tuning is more than 80%.	• Make sure that the input motor nameplate data is correct. • Do Auto-Tuning again and correctly set the motor nameplate data. • If you can uncouple the motor and load, remove the motor from the machine and do Rotational Auto-Tuning again. • If you cannot uncouple the motor and load, use the results from Auto-Tuning.
Code	**Name**	**Causes**	**Possible Solutions**
End2	Iron Core Saturation Coefficient	The motor nameplate data entered during Auto-Tuning is incorrect.	• Make sure that the input motor nameplate data is correct. • Do Auto-Tuning again and correctly set the motor nameplate data.
		Auto-Tuning results were not in the applicable parameter setting range, and *E2-07* or *E2-08 [Motor Saturation Coefficient]* have temporary values.	• Examine and repair motor wiring. • If you can uncouple the motor and load, remove the motor from the machine and do Rotational Auto-Tuning again.
Code	**Name**	**Causes**	**Possible Solutions**
End3	Rated Current Setting Alarm	The rated current value is incorrect.	Do Auto-Tuning again and set the correct rated current shown on the motor nameplate.
Code	**Name**	**Causes**	**Possible Solutions**
End4	Adjusted Slip Calculation Error	The Auto-Tuning results were not in the applicable parameter setting range.	• Make sure that the input motor nameplate data is correct. • Do Rotational Auto-Tuning again and correctly set the motor nameplate data. • If you cannot uncouple the motor and load, do Stationary Auto-Tuning 2.
		The motor rated slip that was measured after Stationary Auto-Tuning was 0.2 Hz or lower.	
		The motor rated slip that was measured after compensation with *E2-08 [Motor Saturation Coefficient 2]* is not in the applicable range.	
		The secondary resistor measurement results were not in the applicable range.	
Code	**Name**	**Causes**	**Possible Solutions**
End5	Resistance Tuning Error	The Auto-Tuning results of the Line-to-Line Resistance were not in the applicable range.	• Make sure that the input motor nameplate data is correct. • Examine and repair motor wiring.
Code	**Name**	**Causes**	**Possible Solutions**
End6	Leakage Inductance Alarm	The Auto-Tuning results were not in the applicable parameter setting range.	Make sure that the input motor nameplate data is correct, and do Auto-Tuning again.
		A1-02 [Control Method Selection] setting is not applicable.	• Examine the value set in *A1-02*. • Make sure that the input motor nameplate data is correct, and do Auto-Tuning again.
Code	**Name**	**Causes**	**Possible Solutions**
End7	No-Load Current Alarm	The Auto-Tuning results of the motor no-load current value were not in the applicable range.	Examine and repair motor wiring.
		Auto-Tuning results were less than 5% of the motor rated current.	Make sure that the input motor nameplate data is correct, and do Auto-Tuning again.
Code	**Name**	**Causes**	**Possible Solutions**
End8	Rescue Operation Speed Warning	High frequency injection calculations for the battery power supply are lower than 10 Hz.	For Rescue Operation, either switch to a larger battery (at least 280 Vdc for 200 V class drives, 560 Vdc for 400 V class drives) or switch to an absolute encoder and the PG-E3/PG-F3 option card.
Code	**Name**	**Causes**	**Possible Solutions**
End9	Rescue Mag. Pole Search Warning	While operating from the backup battery, pole diversion is more than 40°.	For Rescue Operation, either switch to a larger battery (at least 280 Vdc for 200 V class drives, 560 Vdc for 400 V class drives) or switch to an absolute encoder and the PG-E3/PG-F3 option card.

Code	Name	Causes	Possible Solutions
End10	Rescue Mag Pole Polarity Warning	While operating from the backup battery, the Id value between poles was less than 5%.	For Rescue Operation, either switch to a larger battery (at least 280 Vdc for 200 V class drives, 560 Vdc for 400 V class drives) or switch to an absolute encoder and the PG-E3/PG-F3 option card.
Code	**Name**	**Causes**	**Possible Solutions**
Er-01	Motor Data Error	The motor nameplate data entered during Auto-Tuning is incorrect.	• Make sure that the motor nameplate data is correct. • Do Auto-Tuning again and correctly set the motor nameplate data.
		The combination of the motor rated power and motor rated current do not match.	• Examine the combination of drive capacity and motor output. • Do Auto-Tuning again, and correctly set the motor rated power and motor rated current.
		The combination of the motor rated current that was entered during Auto-Tuning and *E2-03 [Motor No-Load Current]* do not align.	• Examine the motor rated current and the no-load current. • Set *E2-03* correctly. • Do Auto-Tuning again, and correctly set the motor rated current.
		The combination of the setting values of Motor Base Frequency and Motor Base Speed do not match.	Do Auto-Tuning again, and correctly set the Motor Base Frequency and Motor Base Speed.
Code	**Name**	**Causes**	**Possible Solutions**
Er-02	Drive in an Alarm State	The motor nameplate data entered during Auto-Tuning is incorrect.	• Make sure that the motor nameplate data entered in Auto-Tuning is correct. • Do Auto-Tuning again and correctly set the motor nameplate data.
		You did Auto-Tuning while the drive had a minor fault or alarm.	Clear the minor fault or alarm and do Auto-Tuning again.
		There is a defective motor cable or cable connection.	Examine and repair motor wiring.
		The load is too large.	• Decrease the load. • Examine the machine area to see if, for example, the motor shaft is locked.
		The drive detected a minor fault during Auto-Tuning.	1. Stop Auto-Tuning. 2. Examine the minor fault code and remove the cause of the problem. 3. Do Auto-Tuning again.
Code	**Name**	**Causes**	**Possible Solutions**
Er-03	STOP Button was Pressed	During Auto-Tuning, STOP was pushed.	Auto-Tuning did not complete correctly. Do Auto-Tuning again.
Code	**Name**	**Causes**	**Possible Solutions**
Er-04	Line-to-Line Resistance Error	The Auto-Tuning results were not in the applicable parameter setting range.	• Examine and repair motor wiring. • Disconnect the machine from the motor and do Rotational Auto-Tuning again.
		Auto-Tuning did not complete in a pre-set length of time.	
		There is a defective motor cable or cable connection.	
		The motor nameplate data entered during Auto-Tuning is incorrect.	• Make sure that the input motor nameplate data is correct. • Do Auto-Tuning again and correctly set the motor nameplate data.
Code	**Name**	**Causes**	**Possible Solutions**
Er-05	No-Load Current Error	The Auto-Tuning results were not in the applicable parameter setting range.	• Examine and repair motor wiring. • Disconnect the machine from the motor and do Rotational Auto-Tuning again.
		Auto-Tuning did not complete in a pre-set length of time.	
		The motor nameplate data entered during Auto-Tuning is incorrect.	• Make sure that the input motor nameplate data is correct. • Do Auto-Tuning again and correctly set the motor nameplate data.
		You did Rotational Auto-Tuning with a load that was more than 30% of the rating connected to the motor.	• Disconnect the machine from the motor and do Rotational Auto-Tuning again. • If you cannot uncouple the motor and load, make sure that the load is less than 30% of the motor rating. If a mechanical brake is installed in the motor, release the brake during Rotational Auto-Tuning.

Code	Name	Causes	Possible Solutions
Er-08	Rated Slip Error	The motor nameplate data entered during Auto-Tuning is incorrect.	• Make sure that the input motor nameplate data is correct. • Do Auto-Tuning again and correctly set the motor nameplate data.
		Auto-Tuning did not complete in a pre-set length of time.	• Examine and repair motor wiring. • If the motor and machine are connected during Rotational Auto-Tuning, decouple the motor from the machinery.
		The Auto-Tuning results were not in the applicable parameter setting range.	
		You did Rotational Auto-Tuning with a load that was more than 30% of the rating connected to the motor.	• Disconnect the machine from the motor and do Rotational Auto-Tuning again. • If you cannot uncouple the motor and load, make sure that the load is less than 30% of the motor rating. If a mechanical brake is installed in the motor, release the brake during Rotational Auto-Tuning.
Code	**Name**	**Causes**	**Possible Solutions**
Er-09	Acceleration Error	The motor did not accelerate for the specified acceleration ramp.	1. Increase the value set in *C1-01 [Acceleration Ramp 1]*. 2. Disconnect the machine from the motor and do Rotational Auto-Tuning again.
		The value of *L7-01 or L7-02 [Forward/Reverse Torque Limit]* is small.	Increase the value set in *L7-01 or L7-02*.
		You did Rotational Auto-Tuning with a load that was more than 30% of the rating connected to the motor.	• Disconnect the machine from the motor and do Rotational Auto-Tuning again. • If you cannot uncouple the motor and load, make sure that the load is less than 30% of the motor rating. If a mechanical brake is installed in the motor, release the brake during Rotational Auto-Tuning.
Code	**Name**	**Causes**	**Possible Solutions**
Er-10	Motor Direction Error	There is defective drive and motor wiring.	Examine and repair motor wiring.
		There is defective drive and encoder wiring.	Examine and repair the wiring to the encoder.
		The direction of the motor and the setting of *F1-05 [Encoder 1 Rotation Selection]* are opposite.	Set *F1-05* correctly.
		The machine pulled the motor to rotate in the opposite direction.	Disconnect the machine from the motor and do Rotational Auto-Tuning again.
		When the torque reference is 100% or higher, the sign of the speed reference was opposite of the detected speed.	
Code	**Name**	**Causes**	**Possible Solutions**
Er-11	Motor Speed Error	The torque reference during acceleration is too high (100%).	• Increase the value set in *C1-01 [Acceleration Ramp 1]*. • Disconnect the machine from the motor and do Rotational Auto-Tuning again.
Code	**Name**	**Causes**	**Possible Solutions**
Er-12	Current Detection Error	There is a phase loss in the drive input power (U/T1, V/T2, W/T3).	Examine and repair motor wiring.
		The current was more than the current rating of the drive.	• Check the motor wiring for any short circuits between the wires. • Check and turn ON any magnetic contactors used between motors. • Replace the control board or the drive. Contact Yaskawa or your nearest sales representative to replace the control board.
		The output current is too low.	
		You tried Auto-Tuning without a motor connected to the drive.	Connect the motor and do Auto-Tuning.
		There was a current detection signal error.	Replace the control board or the drive. Contact Yaskawa or your nearest sales representative to replace the control board.
Code	**Name**	**Causes**	**Possible Solutions**
Er-13	Leakage Inductance Error	The motor rated current value is incorrect.	Correctly set the rated current indicated on the motor nameplate and do Auto-Tuning again.
		The drive could not complete tuning for leakage inductance in fewer than 300 seconds.	Examine and repair motor wiring.
Code	**Name**	**Causes**	**Possible Solutions**
Er-14	Motor Speed Error 2	The motor speed was more than two times the amplitude of speed reference during Inertia Tuning.	Decrease the value set in *C5-01 [ASR Proportional Gain 1]*.

Code	Name	Causes	Possible Solutions
Er-18	Back EMF Error	The result of the induced voltage tuning was not in the applicable range.	1. Make sure that the input motor nameplate data is correct. 2. Do Auto-Tuning again and correctly set the motor nameplate data. 3. Set *E5-56 = 1 [Back-EMF Setting Units Selection = No decimal point]* **Note:** The lower that the motor rated speed is when compared to the motor rated capacity, the larger that the induced voltage constant will be. If the tuning result is more than the upper limit of the induced voltage constant, you can change *E5-56* to increase the upper limit of the induced voltage constant.
Code	**Name**	**Causes**	**Possible Solutions**
Er-19	PM Inductance Error	The Auto-Tuning results of the PM motor inductance were not in the applicable range.	1. Make sure that the input motor nameplate data is correct. 2. Do Auto-Tuning again and correctly set the motor nameplate data.
Code	**Name**	**Causes**	**Possible Solutions**
Er-20	Stator Resistance Error	The Auto-Tuning results of the PM Motor Stator Resistance were not in the applicable range.	1. Make sure that the input motor nameplate data is correct. 2. Do Auto-Tuning again and correctly set the motor nameplate data.
Code	**Name**	**Causes**	**Possible Solutions**
Er-21	Z Pulse Correction Error	The motor is wired incorrectly.	1. Repair motor and encoder wiring errors. 2. Do Encoder Tuning again.
		The encoder is wired incorrectly.	
		You did Auto-Tuning on a coasting motor.	1. Wait for the motor to fully stop. 2. Do Encoder Tuning again.
		The setting for the direction of the encoder motor rotation is incorrect.	1. Set the direction of motor rotation of the encoder in *F1-05 [Encoder 1 Rotation Selection]* correctly. 2. Do Encoder Tuning again.
		The number of encoder pulses is incorrect.	1. Set the number of encoder pulses in *F1-01 [Encoder 1 Pulse Count (PPR)]* correctly. 2. Do Encoder Tuning again.
		The motor Inertia is too large.	Increase the value set in *n8-02 [Pole Alignment Current Level]*.
		The motor vibrates during tuning.	Decrease the value set in *n8-02 [Pole Alignment Current Level]*.
		The encoder is damaged.	• Examine the signal output from the encoder. • Replace the encoder.
Code	**Name**	**Causes**	**Possible Solutions**
Er-22	Initial Rotor Pole Search Error	• Parameters set by Initial Rotor Pole Search Tuning were outside the acceptable range. • During normal operation, pole diversion was more than 20°.	Switch to an absolute encoder and to the PG-F3 option card.
Code	**Name**	**Causes**	**Possible Solutions**
Er-23	Encoder Offset Tuning Warning	• Pole diversion exceeded 15° three times. • Parameters set by Encoder Offset Tuning were outside of the acceptable range.	Do Encoder Tuning (*T2-01 = 3*).
Code	**Name**	**Causes**	**Possible Solutions**
Er-24	SINCOS Compatibility Error	• The signal lines are not correctly connected to terminals R+ and R- on the PG-E3 option card. • There is too much electrical interference at the PG-E3 option card.	Refer to the installation manual for the PG-E3 option card for information on correct connection of signal lines.
		The software for the PG-E3 option card does not support the Auto-Tuning of PG-E3 encoder characteristics.	Check the software version (PRG) for the PG-E3 option card.
Code	**Name**	**Causes**	**Possible Solutions**
Er-25	HighFreq Inject Param Tuning Err	The motor data is incorrect.	Do Stationary Auto-Tuning again. **Note:** If the drive detects *Er-25* after doing Stationary Auto-Tuning, the motor may not be able to use high frequency injection control. Contact Yaskawa or your nearest sales representative for more information.

7.8 Backup Function Operating Mode Display and Errors

◆ Operating Mode Display

When you use the backup function from the LCD keypad, the keypad shows messages according to the current operation. These indicators do not show that an error has occurred.

Keypad Display	Name	Display	Status
Drive and Keypad mismatch. Should the parameters be restored?	Detection of inconsistency between the drive and keypad	Normally displayed	The drive detected the connection of a keypad from a different drive. Select [Yes] to copy parameters backed up in the keypad to the connected drive.
Restore Restore from keypad	Restoring parameters	Flashing	The parameters stored in the keypad have been restored to the drive.
End	Backup/restore/verify operation ended normally	Normally displayed	The parameter backup, restore, or verify operation ended normally.
Backup Backup from Drive	Backing up parameters	Flashing	The parameters stored in the drive are being backed up to the keypad.
Verify Keypad & Drive	Verifying parameters	Flashing	The parameter settings stored in the keypad and the parameter settings in the drive align or are being compared.

◆ Backup Function Runtime Errors

When an error occurs, the keypad shows a code to identify the error.

The table in this section show the error codes. Refer to these tables to remove the cause of the errors.

Note:

Push any key on the keypad to clear an error.

Code	Name	Causes	Possible Solutions
CPyE	Error Writing Data	Parameter restore did not end correctly.	Restore the parameters.
Code	**Name**	**Causes**	**Possible Solutions**
CSEr	Control Mode Mismatch	The keypad is broken.	Replace the keypad.
Code	**Name**	**Causes**	**Possible Solutions**
dFPS	Drive Model Mismatch	You tried to restore parameters to a different drive model than the one that you backed up.	1. Examine the drive model that you used to back up the parameters. 2. Restore the parameters.
Code	**Name**	**Causes**	**Possible Solutions**
iFEr	Keypad Communication Error	There was a communications error between the keypad and the drive.	Examine the connector or cable connection.
Code	**Name**	**Causes**	**Possible Solutions**
ndAT	Error Received Data	The parameter settings for model and specifications (power supply voltage and capacity) are different between the keypad and the drive.	1. Make sure that drive model and the value set in *o2-04 [Drive Model (KVA) Selection]* agree. 2. Restore the parameters.
		The parameters are not stored in the keypad.	1. Connect a keypad that has the correct parameters. 2. Restore the parameters.
Code	**Name**	**Causes**	**Possible Solutions**
rdEr	Error Reading Data	You tried to back up the data when *o3-02 = 0 [Copy Allowed Selection = Disabled]*.	Set *o3-02 = 1 [Enabled]* and back up again.
Code	**Name**	**Causes**	**Possible Solutions**
vAEr	Voltage Class, Capacity Mismatch	The power supply specifications or drive capacity parameter settings are different between the keypad and the drive.	1. Make sure that drive model and the value set in *o2-04 [Drive Model (KVA) Selection]* agree. 2. Restore the parameters.
Code	**Name**	**Causes**	**Possible Solutions**
vFyE	Parameters do not Match	The parameters that are backed up in the keypad and the parameters in the drive do not align.	1. Restore or backup the parameters again. 2. Verify the parameters.

7.9 Diagnosing and Resetting Faults

When a fault occurs and the drive stops, do the procedures in this section to remove the cause of the fault, then re-energize the drive.

◆ Fault and Power Loss Occur at the Same Time

⚠ WARNING Crush Hazard
Wear eye protection when you do work on the drive.
If you do not use correct safety equipment, it can cause serious injury or death.

⚠ WARNING Electrical Shock Hazard
After the drive blows a fuse or trips an ELCB, do not immediately energize the drive or operate peripheral devices. Wait for the time specified on the warning label at a minimum and make sure that all indicators are OFF. Then check the wiring and peripheral device ratings to find the cause of the problem. If you do not know the cause of the problem, contact Yaskawa before you energize the drive or peripheral devices.
If you do not fix the problem before you operate the drive or peripheral devices, it can cause serious injury or death.

1. Supply power to the control circuit from the external 24 V input.
2. Use monitors *U2-xx, U9xx [Fault Trace]* to show the fault code and data about the operating status of the drive immediately before the fault occurred.
3. Use the information in the Troubleshooting tables to remove the fault.

Note:

1. To find the faults that were triggered, check the fault history in *U2-02 [Previous Fault]*, *U9-01 [2nd Last Fault]*, or *U9-21 [3rd Last Fault]*. To find information about drive status (for example frequency, current, and voltage) when the faults were triggered, check these monitor parameters:
   - The drive status at the most recent fault: *U2-03 [Speed Ref @ Fault] to U2-29 [InTerm Status2@Fault]*
   - The drive status at the second most recent fault: *U9-02 [Speed Ref@2nd Fault] to U9-10 [Output Term@2ndFault]*
   - The drive status at the third most recent fault: *U9-22 [Speed Ref@3rd Fault] to U9-30 [Output Term@3rdFault]*
2. If the fault display stays after you re-energize the drive, remove the cause of the fault and reset.

◆ Fault Occurs Without Power Loss

1. Examine the fault code shown on the keypad.
2. Use the information in the Troubleshooting tables to remove the fault.
3. Do a fault reset.

◆ Fault Reset

If a fault occurs, you must remove the cause of the fault and re-energize the drive. Table 7.3 lists the different methods to reset the drive after a fault.

Table 7.3 Fault Reset Methods

Methods	Description
Method 1	While the keypad is showing the fault or alarm code, push F1 (Reset) or > on the keypad.
Method 2	Switch ON the MFDI terminal set to *H1-xx = 14 [MFDI Function Selection = Fault Reset]*. 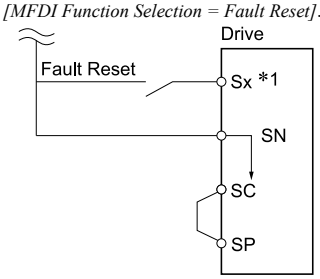 *1 Sx indicates an MFDI terminal set for *H1-xx = 14*.
Method 3	1. De-energize the drive main circuit power supply. 2. Energize the drive again after the keypad display goes out. 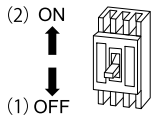

Note:

If the drive receives an Up/Down command from a communication option or control circuit terminal, the drive will not reset the fault. Remove the Up/Down command, then try to clear the fault. If you do a fault reset when the drive has an Up/Down command, the keypad will show minor fault *CrST [Remove RUN Command to Reset]*.

7.10 Troubleshooting Without Fault Display

If the drive or motor operate incorrectly, but the keypad does not show a fault or error code, refer to the items this section.

- Motor hunting and oscillation
- Unsatisfactory motor torque
- Unsatisfactory speed precision
- Unsatisfactory motor torque and speed response
- Motor noise

◆ Typical Problems

Symptom	Ref.
The Parameter Settings Will Not Change	350
The Motor Does Not Rotate after You Enter an Up/Down Command	351
The Motor Rotates in the Opposite Direction from the Up/Down Command	351
The Motor Is Too Hot	352
The Correct Auto-Tuning Mode Is Not Available	352
Encoder Offset Set During Auto-Tuning Consistently Differs by 30 Degrees or More	352
oPE02 Error Occurs When Decreasing the Motor Rated Current Setting	352
The Motor Stalls during Acceleration or Accel/Decel Ramp Is Too Long	353
The Drive Speed Reference Is Different than the Controller Speed Reference Command	353
There Is Too Much Motor Oscillation and the Rotation Is Irregular	354
Deceleration Takes Longer than Expected when You Enable Dynamic Braking	354
The Elevator Car Rolls Back when You Apply or Release the Brake	354
There Is Audible Noise from the Drive or Motor Cables when You Energize the Drive	354
The Earth Leakage Circuit Breaker (ELCB) Trips During Run	354
The Motor Rotation Causes Oscillation or Hunting	355
The Starting Torque Is Not Sufficient	355
The Motor Rotates after You Shut Off the Drive Output	355
The Output Speed Is Lower Than the Speed Reference	355
The Motor Speed Is Not Stable when You Use a PM Motor	355
The Motor Is Making an Audible Noise	355

◆ The Parameter Settings Will Not Change

Causes	Possible Solutions
The drive is operating the motor (the drive is in Drive Mode).	Stop the drive and change to Programming Mode.
Parameter *A1-01 = 0 [Access Level Selection = Operation Only]*.	Set *A1-01 = 2 [Access Level Selection = Advanced Level]* or *A1-01 = 3 [Expert Level]*.
You entered an incorrect password in *A1-04 [Password]*.	• Enter the correct password to *A1-04* again. • If you forgot the password, set the password again with *A1-04*. **Note:** If you set the password, you cannot change these parameters until the password aligns: • *A1-01 [Access Level Selection]* • *A1-02 [Control Method Selection]* • *A1-03 [Initialize Parameters]* • *A2-01 to A2-32 [User Parameter 1 to User Parameter 32]*
The drive detected *Uv [Undervoltage]*.	• View *U1-07 [DC Bus Voltage]* to see the power supply voltage. • Examine the main circuit wiring.

◆ The Motor Does Not Rotate after You Enter an Up/Down Command

Causes	Possible Solutions
The drive is not in Drive Mode.	1. Make sure that the keypad shows [Rdy]. 2. If the keypad does not show [Rdy], go back to the Home screen.
The drive stopped, you pushed LO/RE and changed the Up/Down command source to the keypad.	Do one of these two: • Push LO/RE. • Re-energize the drive. **Note:** Set *o2-01 = 0 [LO/RE Key Function Selection = Disabled]* to prevent changing the Up/Down command source with LO/RE.
Auto-Tuning completed.	Go back to the Home screen on the keypad. **Note:** When Auto-Tuning completes, the drive changes to Programming Mode. The drive will not accept an Up/Down command unless the drive is in Drive Mode.
The drive received an emergency stop command.	Turn off the emergency stop input signal.
The settings for the source that supplies the Up/Down command are incorrect.	Set *b1-02 [Up/Down Command Selection 1]* correctly.
The speed reference source is set incorrectly.	Set *b1-01 [Speed Reference Selection 1]* correctly.
There is defective wiring in the control circuit terminals.	• Correctly wire the drive control circuit terminals. • View *U1-10 [Input Terminal Status]* for input terminal status.
The settings for voltage input and current input of the master speed reference are incorrect.	Examine the analog input terminal signal level settings. • Terminal A2: DIP switch S1 and *H3-09 [Terminal A2 Signal Level Select]*
The selection for the Sinking/Sourcing Mode and the internal/external power supply is incorrect.	• For Sinking Mode, close the circuit between terminals SC-SP with a wire jumper. • For Sourcing Mode, close the circuit between terminals SC-SN with a wire jumper. • For external power supply, remove the wire jumper.
The speed reference is too low.	• View *U1-01 [Speed Reference]*. • Increase the speed reference to a value higher than *E1-09 [Minimum Output Frequency]*.
The MFAI setting is incorrect.	• Make sure that the functions set to the MFAI are correct. • View *U1-13 to U1-15 [Terminal A1, A2, A3 Input Voltage]* to see if the analog input values set to terminals A1, A2, and A3 are applicable.
The settings for the analog speed reference are incorrect.	Check the settings (signal level, function, bias, gain) for the analog input that supplies the speed reference.
You pushed STOP.	Turn the Up/Down command OFF then ON from an external input. **Note:** When you push STOP during operation, the drive will ramp to stop. Set *o2-02 = 0 [STOP Key Function Selection = Disabled]* to disable the STOP function.

◆ The Motor Rotates in the Opposite Direction from the Up/Down Command

Causes	Possible Solutions
The phase wiring between the drive and motor is incorrect.	• Examine the wiring between the drive and motor. • Connect drive output terminals U/T1, V/T2, and W/T3 in the correct sequence to agree with motor terminals U, V, and W. • Switch two motor cables U, V, and W to reverse motor direction.
The forward direction for the motor is set incorrectly.	• Connect drive output terminals U/T1, V/T2, and W/T3 in the correct sequence to agree with motor terminals U, V, and W. • Switch two motor cables U, V, and W to reverse motor direction. 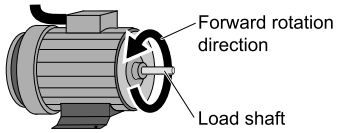 **Figure 7.1 Forward Rotating Motor** **Note:** • For Yaskawa motors, the forward direction is counterclockwise when looking from the motor shaft side. • Refer to the motor specifications, and make sure that the forward rotation direction is correct for the application. The forward rotation direction of motors can be different for different motor manufacturers and types. • Do Rotation Direction Trouble Shoot.
The signal connections for Up and Down commands on the drive control circuit terminals and control panel side are incorrect.	Correctly wire the control circuit.

Causes	Possible Solutions
The Initial Pole Detection fails in normal operation.	• Set *C6-23 = 0 [Carrier Frequency @ Pole Search = 2 kHz]*. • Adjust *n8-41 [HFI P Gain]*. • Use a PG-E3 or PG-F3 option.
The Initial Pole Detection fails in Rescue Operation.	• Set *C6-23 = 0*. • Adjust *nA-05 [HFI P Gain @ Rescue]*. • Use a PG-E3 or PG-F3 option.

◆ The Motor Is Too Hot

Causes	Possible Solutions
The load is too heavy.	• Decrease the load. • Increase the acceleration and deceleration ramps. • Examine the values set in *L1-01 [Motor Overload (oL1) Protection]*, *L1-02 [Motor Overload Protection Time]*, and *E2-01 [Motor Rated Current (FLA)]*. • Use a larger motor. **Note:** The motor also has a short-term overload rating. Examine this rating carefully before you set drive parameters.
The motor is running continuously at a very low speed.	• Change the run speed. • Use a drive-dedicated motor.
The drive is operating in a vector control mode, but you did not do Auto-Tuning.	• Do Auto-Tuning. • Calculate motor parameters and set motor parameters. • Set *A1-02 = 0 [Control Method Selection = V/f Control]*.
The voltage insulation between motor phases is not sufficient.	• Use a motor with a voltage tolerance that is higher than the maximum voltage surge. • Use a drive-dedicated motor that is rated for use with AC drives for applications that use a motor on drives rated higher than 400 V class. • Install an AC reactor on the output side of the drive. **Note:** When the motor is connected to the drive output terminals U/T1, V/T2, and W/T3, surges occur between the drive switching and the motor coils. These surges can be three times the drive input power supply voltage (600 V for a 200 V class drive, 1200 V for a 400 V class drive).
The ambient temperature of the motor is too high.	• Measure the ambient temperature. • Decrease the temperature in the area until it is in the specified temperature range.
The motor fan stopped or is clogged.	• Clean the motor fan. • Make the drive environment better.

◆ The Correct Auto-Tuning Mode Is Not Available

Causes	Possible Solutions
The desired Auto-Tuning mode is not available for the selected control method.	Use *A1-02 [Control Method Selection]* to change the motor control method.

◆ Encoder Offset Set During Auto-Tuning Consistently Differs by 30 Degrees or More

Causes	Possible Solutions
PG-E3 option detected excess position error with the ERN1387 encoder.	Set *T2-01 = 3 or 4 [PM Auto-Tuning Selection = Encoder Tuning or Rotational (Ld, Lq, R, back-EMF)]* to do Auto-Tuning for PG-E3 encoder characteristics.

◆ oPE02 Error Occurs When Decreasing the Motor Rated Current Setting

Causes	Possible Solutions
The motor rated current and the motor no-load current settings in the drive are incorrect.	• You are trying to set the motor rated current in *E2-01 [Motor Rated Current (FLA)]* to a value lower than the no-load current set in *E2-03 [Motor No-Load Current]*. • Make sure that value set in *E2-01* is higher than *E2-03*. • If it is necessary to set *E2-01* lower than *E2-03*, first decrease the value set to *E2-03*, then change the *E2-01* setting as necessary.

◆ The Motor Stalls during Acceleration or Accel/Decel Ramp Is Too Long

Causes	Possible Solutions
The drive and motor system reached the torque limit or current suppression will not let the drive accelerate.	• Decrease the load. • Use a larger motor. **Note:** Although the drive has a Stall Prevention function and a Torque Compensation Limit function, accelerating too fast or trying to drive a load that is too large can exceed the limits of the motor.
Torque limit is set incorrectly.	Set the torque limit correctly.
The acceleration ramp setting is too short.	Check the values set in *C1-01, C1-03, C1-05, or C1-07 [Acceleration Ramps]* and set them to applicable values.
The load is too heavy.	• Increase the acceleration ramp. • Examine the mechanical brake and make sure that it is fully releasing. • Decrease the load to make sure that the output current stays less than the motor rated current. • Use a larger motor. **Note:** Although the drive has a Stall Prevention function and a Torque Compensation Limit function, accelerating too fast or trying to drive a load that is too large can exceed the limits of the motor.
The speed reference is low.	• Examine *E1-04 [Maximum Output Frequency]* and increase the setting if it is set too low. • Examine *U1-01 [Speed Reference]* for the correct speed reference. • Examine the multi-function input terminals to see if a speed reference signal switch has been set. • Examine the low gain level set in *H3-03, H3-11, H3-07 [Terminal A1, A2, A3 Gain Setting]* if you use MFAI.
The motor characteristics and drive parameter settings are not compatible.	• Set the correct V/f pattern to agree with the characteristics of the motor. • Examine the V/f pattern set in *E1-03 [V/f Pattern Selection]*. • Do Rotational Auto-Tuning.
The drive is operating in vector control mode, but you did not complete Auto-Tuning.	• Do Auto-Tuning. • Calculate motor data and reset motor parameters. • Set *A1-02 = 0 [Control Method Selection = V/f Control]*.
The Stall Prevention level during acceleration setting is too low.	Increase the value set in *L3-02 [Stall Prevent Level during Accel]*. **Note:** If the *L3-02* value is too low, the acceleration ramp can be too long.
The Stall Prevention level during run setting is too low.	Increase the value set in *L3-06 [Stall Prevent Level during Run]*. **Note:** If the *L3-06* value is too low, speed will decrease while the drive outputs torque.
The drive reached the limitations of the V/f motor control method.	• Do Stationary Auto-Tuning for Line-to-Line Resistance. • Set the V/f pattern to "High Starting Torque". • Use a Vector Control method. **Note:** V/f control method does not provide high torque at low speeds.

◆ The Drive Speed Reference Is Different than the Controller Speed Reference Command

Causes	Possible Solutions
The analog input gain and bias for the speed reference input are set incorrectly.	Examine the gain and bias settings for the analog inputs that set the speed reference. • Terminal A1: *H3-03 [Terminal A1 Gain Setting]*, *H3-04 [Terminal A1 Bias Setting]* • Terminal A2: *H3-11 [Terminal A2 Gain Setting]*, *H3-12 [Terminal A2 Bias Setting]* • Terminal A3: *H3-07 [Terminal A3 Gain Setting]*, *H3-08 [Terminal A3 Bias Setting]*
The drive is receiving frequency bias signals from analog input terminals A1 to A3 and the sum of all signals makes the speed reference.	• Examine parameters *H3-02, H3-10, H3-06 [MFAI Function Selection]*. If two or more of these parameters are set to *0*, change the settings. • Use *U1-13 to U1-15 [Terminal A1, A2, A3 Input Voltage]* to make sure that the analog input values set to terminals A1, A2, and A3 are applicable.
The motor rotates faster than the speed reference at low speed.	Set *E1-09 [Minimum Output Frequency] > 0*. **Note:** • The recommended setting for *E1-09* is 0.5 Hz. • When speed reference < *E1-09*, the drive output will turn OFF.

◆ There Is Too Much Motor Oscillation and the Rotation Is Irregular

Causes	Possible Solutions
Unsatisfactory balance of motor phases.	• Make sure that the drive input power voltage supplies stable power. • Set *L8-05 = 0 [Input Phase Loss Protection Sel = Disabled]*.
The motor is hunting.	Increase the value of *n2-01 [SpdFeedbackDetectCtr (AFR) Gain]* or *n2-02 [SpdFeedbackDetCtr (AFR)TimeConst1]*.

◆ Deceleration Takes Longer than Expected when You Enable Dynamic Braking

Causes	Possible Solutions
The deceleration ramp setting is too long.	Set *C1-02, C1-04, C1-06, or C1-08 [Deceleration Ramps]* to applicable values.
The motor torque is not sufficient.	Use a larger motor. **Note:** If these items are correct, the demand on the motor is more than the motor capacity: • Parameter settings are correct. • The drive does not detect *ov [Overvoltage]*.
The drive and motor system reached the torque limit.	Examine the values set in *L7-01 to L7-04 [Torque Limit]* and increase them if necessary. **Note:** If the torque limit is enabled, deceleration ramp can increase because the drive cannot output more torque than the limit.
The load is more than the internal torque limit as specified by the continuous rated output current of the drive.	Replace the drive with a larger capacity model.

◆ The Elevator Car Rolls Back when You Apply or Release the Brake

Causes	Possible Solutions
The DC injection braking is not sufficient.	Increase the value set in *S1-03 [DC Injection Current at Stop]*.
The holding power of the Position Lock is insufficient.	• Increase the value set in *S3-02 [Position Lock Gain 2 at Start]*. • Increase the value set in *S3-03 [Position Lock Gain at Stop]*.
The torque compensation by the MFDI is insufficient.	Examine the values set in *S3-27 [Load1 Torque Compensation Level]* and *S3-28 [Load2 Torque Compensation Level]*.

◆ There Is Audible Noise from the Drive or Motor Cables when You Energize the Drive

Causes	Possible Solutions
The relay switching in the drive is making too much noise.	• Use *C6-03 [Carrier Frequency]* to decrease the carrier frequency. • Connect a noise filter to the input side of the drive power supply. • Connect a noise filter to the output side of the drive. • Isolate the control circuit wiring from the main circuit wiring. • Use a metal cable gland to wire the drive. • Shield the periphery of the drive with metal. • Make sure that the drive and motor are grounded correctly. • Make sure that ground faults have not occurred in the wiring or motor.

◆ The Earth Leakage Circuit Breaker (ELCB) Trips During Run

Causes	Possible Solutions
There is too much leakage current from the drive.	• Increase the ELCB sensitivity or use ELCB with a higher threshold. • Use *C6-03 [Carrier Frequency]* to decrease the carrier frequency. • Decrease the length of the cable used between the drive and the motor. • Install a noise filter or AC reactor on the output side of the drive. Set *C6-03 = 2.0 kHz* when connecting an AC reactor. • Disable the internal EMC filter.

◆ The Motor Rotation Causes Oscillation or Hunting

Causes	Possible Solutions
The speed reference is assigned to an external source, and there is electrical interference in the signal.	Make sure that electrical interference does not have an effect on the signal lines. • Isolate control circuit wiring from main circuit wiring. • Use twisted-pair cables or shielded wiring for the control circuit. • Increase *H3-13 [Analog Input FilterTime Constant]*.
The cable between the drive and motor is too long.	• Do Auto-Tuning. • Make the wiring as short as possible.

◆ The Starting Torque Is Not Sufficient

Causes	Possible Solutions
Auto-Tuning has not been done in vector control method.	Do Auto-Tuning.
The control method was changed after doing Auto-Tuning.	Do Auto-Tuning again.

◆ The Motor Rotates after You Shut Off the Drive Output

Causes	Possible Solutions
DC Injection Braking at stop is too low and the drive cannot decelerate correctly.	• Increase the value set in *S1-03 [DC Injection Current at Stop]*. • Increase the value set in *S1-05 [DC Inj/Pos Lock Time at Stop]*.
The stopping method makes the drive coast to stop.	Set *b1-03 = 0 [Stopping Method Selection = Ramp to Stop]*.

◆ The Output Speed Is Lower Than the Speed Reference

Causes	Possible Solutions
A large load triggered Stall Prevention function during acceleration.	• Decrease the load. • Adjust *L3-02 [Stall Prevent Level during Accel]*.
L3-01 = 3 [Stall Prevention during Accel = Current Limit Method] has been set.	1. Check whether the V/f pattern and motor parameter settings are appropriate, and set them correctly. 2. If this does not solve the problem, and it is not necessary to limit the current level of stall during acceleration, adjust *L3-02*. 3. If this does not solve the problem, set *L3-01 = 1 [Enabled]*.

◆ The Motor Speed Is Not Stable when You Use a PM Motor

Causes	Possible Solutions
The drive is operating the motor at more than the specified speed control range.	Examine the speed control range and adjust the speed.
The motor is hunting.	Adjust these parameters to have the largest effect: • *C4-02 [Torque Compensation Delay Time]*
Hunting occurs at start.	Increase the value set in *C2-01 [Jerk @ Start of Accel]*.
Too much current is flowing through the drive.	For special-purpose motors, enter the correct value to *E5-xx* as specified by the motor test report.

◆ The Motor Is Making an Audible Noise

Causes	Possible Solutions
100% of the continuous rated output current of the drive was exceeded while operating at low speeds.	• If the sound is coming from the motor, set *L8-38 = 0 [Automatic Torque Boost Function = Disabled]*. • If *oL2 [Drive Overload]* occurs frequently after setting *L8-38 = 0*, replace the drive with a high-capacity drive.

8

Periodic Inspection and Maintenance

This chapter gives information about how to examine and maintain drives in use, how to replace cooling fans and other parts, and how to store drives.

8.1 Section Safety 358
8.2 Inspection 360
8.3 Maintenance 363
8.4 Replace Cooling Fans and Circulation Fans 365
8.5 Replace the Drive 384
8.6 Replace the Keypad Battery 390
8.7 Storage Guidelines 392

8.1 Section Safety

⚠DANGER

Electrical Shock Hazard

Do not examine, connect, or disconnect wiring on an energized drive. Before servicing, disconnect all power to the equipment and wait for the time specified on the warning label at a minimum. The internal capacitor stays charged after the drive is de-energized. The charge indicator LED extinguishes when the DC bus voltage decreases below 50 Vdc. When all indicators are OFF, remove the covers before measuring for dangerous voltages to make sure that the drive is safe.

If you do work on the drive when it is energized, it will cause serious injury or death from electrical shock.

Disconnect all power to the drive and wait for the time specified on the warning label before you remove covers. Check the drive for dangerous voltages before servicing or repair.

If you do work on the drive when it is energized and there is no cover over the electronic circuits, it will cause serious injury or death from electrical shock. The drive has internal capacitors that stay charged after you de-energize the drive.

⚠WARNING

Electrical Shock Hazard

The motor will run after you de-energize the drive. PM motors can generate induced voltage to the terminal of the motor after you de-energize the drive.

If you touch a motor that is moving or energized, it can cause serious injury or death.

Do not operate the drive when covers are missing. Replace covers and shields before you operate the drive. Use the drive only as specified by the instructions.

Some figures in this section include drives without covers or safety shields to more clearly show the inside of the drive. If covers or safety shields are missing from the drive, it can cause serious injury or death.

Always ground the motor-side grounding terminal.

If you do not ground the equipment correctly, it can cause serious injury or death if you touch the motor case.

Only let approved personnel install, wire, maintain, examine, replace parts, and repair the drive.

If personnel are not approved, it can cause serious injury or death.

Do not wear loose clothing or jewelry when you do work on the drive. Tighten loose clothing and remove all metal objects, for example watches or rings.

Loose clothing can catch on the drive and jewelry can conduct electricity and cause serious injury or death.

Fire Hazard

Tighten all terminal screws to the correct tightening torque.

Connections that are too loose or too tight can cause incorrect operation and damage to the drive. Incorrect connections can also cause death or serious injury from fire.

Damage to Equipment

Do not apply incorrect voltage to the main circuit of the drive. Operate the drive in the specified range of the input voltage on the drive nameplate.

Voltages that are higher than the permitted nameplate tolerance can cause damage to the drive.

Fire Hazard

Do not put flammable or combustible materials on top of the drive and do not install the drive near flammable or combustible materials. Attach the drive to metal or other noncombustible material.

Flammable and combustible materials can start a fire and cause serious injury or death.

⚠WARNING

Electrical Shock Hazard

Do not modify the drive body or drive circuitry.

Modifications to drive body and circuitry can cause serious injury or death, will cause damage to the drive, and will void the warranty. Yaskawa is not responsible for modifications of the product made by the user.

Sudden Movement Hazard

Make sure that you align the phase order for the drive and motor when you connect the motor to drive output terminals U/T1, V/T2, and W/T3.

If the phase order is incorrect, it can cause the motor to run in reverse. If the motor accidentally runs in reverse, it can cause serious injury or death.

⚠CAUTION

Burn Hazard

Do not touch a hot drive heatsink. De-energize the drive, wait for a minimum of 15 minutes, then make sure that the heatsink is cool before you replace the cooling fans.

If you touch a hot drive heatsink, it can burn you.

NOTICE

Damage to Equipment

When you touch the drive and circuit boards, make sure that you observe correct electrostatic discharge (ESD) procedures.

If you do not follow procedures, it can cause ESD damage to the drive circuitry.

Use the instructions in this manual to replace the cooling fans. When you do maintenance on the fans, replace all of the fans to increase product life.

If you install the fans incorrectly, it can cause damage to the drive.

Make sure that all connections are correct after you install the drive and connect peripheral devices.

Incorrect connections can cause damage to the drive.

Do not energize and de-energize the drive more frequently than one time each 5 minutes (48 times/day maximum).

If you frequently energize and de-energize the drive, it can cause drive failure.

Do not operate a drive or connected equipment that has damaged or missing parts.

You can cause damage to the drive and connected equipment.

Note:

Do not use unshielded cable for control wiring. Use shielded, twisted-pair wires and ground the shield to the ground terminal of the drive. Incorrect wiring can cause electrical interference and unsatisfactory system performance.

8.2 Inspection

Power electronics have limited life and can show changes in performance and deterioration of performance after years of use in usual conditions. To help prevent these problems, it is important to do preventive maintenance and regular inspection, and replace parts on the drive.

Drives contain different types of power electronics, for example power transistors, semiconductors, capacitors, resistors, fans, and relays. The electronics in the drive are necessary for correct motor control.

Follow the inspection lists in this chapter as a part of a regular maintenance program.

Note:

Examine the drive one time each year at a minimum.

The operating conditions, environmental conditions, and use conditions will have an effect on the examination frequency for connected equipment.

Examine the drive more frequently if you use the drive in bad conditions or in these conditions:

- High ambient temperatures
- Frequent starting and stopping
- Changes in the AC power supply or load
- Too much vibration or shock loading
- Dust, metal dust, salt, sulfuric acid, or chlorine atmospheres
- Unsatisfactory storage conditions.

◆ Recommended Daily Inspection

Table 8.1 gives information about the recommended daily inspection for Yaskawa drives. Examine the items in Table 8.1 each day to make sure that the components do not become unserviceable or fail. Make a copy of this checklist and put a check mark in the “Checked” column after each inspection.

Table 8.1 Daily Inspection Checklist

Inspection Area	Inspection Points	Corrective Action	Checked
Motor	Examine for unusual oscillation or noise coming from the motor.	• Check the load coupling. • Measure motor vibration. • Tighten all loose components.	
Cooling System	Examine for unusual heat from the drive or motor and visible discoloration.	• Check for a load that is too heavy. • Tighten loose screws. • Check for a dirty heatsink or motor. • Measure the ambient temperature.	
	Examine the cooling fans, circulation fans, and circuit board cooling fans.	• Check for a clogged or dirty fan. • Use the performance life monitor to check for correct fan operation.	
Surrounding Environment	Make sure that the installation environment is applicable.	Remove the source of contamination or correct unsatisfactory environment.	
Load	Make sure that the drive output current is not more than the motor or drive rating for an extended period of time.	• Check for a load that is too heavy. • Check the correct motor parameter settings.	
Power Supply Voltage	Examine main power supply and control voltages.	• Correct the voltage or power supply to agree with nameplate specifications. • Verify all main circuit phases.	

◆ Recommended Periodic Inspection

Table 8.2 to Table 8.6 give information about the recommended periodic inspections for Yaskawa drives. Examine the drive one time each year at a minimum. The operating conditions, environmental conditions, and use conditions will have an effect on the examination frequency for connected equipment. You must use your experience with the application to select the correct inspection frequency for each drive installation. Periodic inspections will help to prevent performance deterioration and product failure. Make a copy of this checklist and put a check mark in the “Checked” column after each inspection.

⚠ DANGER Electrical Shock Hazard

Do not examine, connect, or disconnect wiring on an energized drive. Before servicing, disconnect all power to the equipment and wait for the time specified on the warning label at a minimum. The internal capacitor stays charged after the drive is de-energized. The charge indicator LED extinguishes when the DC bus voltage decreases below 50 Vdc. When all indicators are OFF, remove the covers before measuring for dangerous voltages to make sure that the drive is safe.
If you do work on the drive when it is energized, it will cause serious injury or death from electrical shock.

Table 8.2 Main Circuit Periodic Inspection Checklist

Inspection Area	Inspection Points	Corrective Action	Checked
General	• Examine equipment for discoloration from too much heat or deterioration. • Examine for damaged parts.	• Replace damaged components as necessary. • The drive does not have many serviceable parts and it could be necessary to replace the drive.	
	Examine for dirt, unwanted particles, or dust on components.	• Examine enclosure door seal. • Use a vacuum cleaner to remove unwanted particles and dust without touching the components. • If you cannot remove unwanted particles and dust with a vacuum cleaner, replace the components.	
Conductors and Wiring	• Examine wiring and connections for discoloration or damage. Examine wiring and connections for discoloration from too much heat. • Examine wire insulation and shielding for discoloration and wear.	Repair or replace damaged wiring.	
Terminal Block	Examine terminals for stripped, damaged, or loose connections.	• Tighten loose screws. • Replace damaged screws or terminals. **Note:** On drive models 2059, 2075, 4030, and 4039, you cannot replace the hex screws.	
Electromagnetic Contactors and Relays	• Examine contactors and relays for too much noise during operation. • Examine coils for signs of too much heat, such as melted or broken insulation.	• Check coil voltage for overvoltage or undervoltage conditions. • Replace broken relays, contactors, or circuit boards that you can remove.	
Dynamic Braking Option	Examine the insulation for discoloration from too much heat.	If there is discoloration in the option, check to make sure that the wiring is not damaged. A small quantity of discoloration is not a problem.	
Electrolytic Capacitor	• Examine for leaks, discoloration, or cracks. • Examine if the cap has come off, if there is swelling, or if there are leaks from broken sides.	The drive does not have many serviceable parts and it could be necessary to replace the drive.	
Diodes, IGBT (Power Transistor)	Examine for dust or other unwanted material collected on the surface.	Use a vacuum cleaner to remove unwanted particles and dust without touching the components.	

Table 8.3 Motor Periodic Inspection Checklist

Inspection Area	Inspection Points	Corrective Action	Checked
Operation Check	Check for increased vibration or unusual noise.	Stop the motor and contact approved maintenance personnel as necessary.	

Table 8.4 Control Circuit Periodic Inspection Checklist

Inspection Area	Inspection Points	Corrective Action	Checked
General	• Examine terminals for stripped, damaged, or loose connections. • Make sure that all terminals have been correctly tightened.	• Tighten loose screws. • Replace damaged screws or terminals. • If terminals are integral to a circuit board, it could be necessary to replace the control board or the drive.	
Circuit Boards	• Check for odor, discoloration, or rust. • Make sure that all connections are correctly fastened. • Make sure that the surface of the circuit board does not have dust or oil mist.	• Tighten loose connections. • Use a vacuum cleaner to remove unwanted particles and dust without touching the components. • If you cannot remove unwanted particles and dust with a vacuum cleaner, replace the components. • Do not use solvents to clean the board. • The drive does not have many serviceable parts and it could be necessary to replace the drive.	

Table 8.5 Cooling System Periodic Inspection Checklist

Inspection Area	Inspection Points	Corrective Action	Checked
Cooling fans	• Check for unusual oscillation or unusual noise. • Check for damaged or missing fan blades.	Clean or replace the fans as necessary.	
Heatsink	• Examine for dust or other unwanted material collected on the surface. • Examine for dirt.	Use a vacuum cleaner to remove unwanted particles and dust without touching the components.	
Air Duct	Examine air intake, exhaust openings and make sure that there are no unwanted materials on the surface.	Clear blockages and clean air duct as necessary.	

Table 8.6 Keypad Periodic Inspection Checklist

Inspection Area	Inspection Points	Corrective Action	Checked
General	• Make sure that the keypad shows the data correctly. • Examine for dust or other unwanted material that collected on components in the area.	• If you have problems with the display or the keys, contact Yaskawa or your nearest sales representative. • Clean the keypad.	

8.3 Maintenance

The drive Maintenance Monitors keep track of component wear and tell the user when the end of the estimated performance life is approaching. The Maintenance Monitors prevent the need to shut down the full system for unexpected problems. Users can set alarm notifications for the maintenance periods for these drive components:

- Cooling fan
- Electrolytic capacitor
- Soft charge bypass relay
- IGBT

Contact Yaskawa or your nearest sales representative for more information about part replacement.

◆ Replaceable Parts

⚠ DANGER Electrical Shock Hazard

Do not examine, connect, or disconnect wiring on an energized drive. Before servicing, disconnect all power to the equipment and wait for the time specified on the warning label at a minimum. The internal capacitor stays charged after the drive is de-energized. The charge indicator LED extinguishes when the DC bus voltage decreases below 50 Vdc. When all indicators are OFF, remove the covers before measuring for dangerous voltages to make sure that the drive is safe.
If you do work on the drive when it is energized, it will cause serious injury or death from electrical shock.

You can replace these parts of the drive:

- Control circuit terminal board
- Cooling fan, circulation fan
- Keypad

If there is a failure in the main circuit, replace the drive.

If the drive is in the warranty period, contact Yaskawa or your nearest sales representative before you replace parts. Yaskawa reserves the right to replace or repair the drive as specified by the Yaskawa warranty policy.

◆ Part Replacement Guidelines

Table 8.7 shows the standard replacement period for replacement parts. When you replace these parts, make sure that you use Yaskawa replacement parts for the applicable model and design revision number of your drive.

Table 8.7 Standard Replacement Period

Parts	Standard Replacement Period
Cooling fan	10 years
Electrolytic capacitor *1	10 years

*1 If there is damage to parts that you cannot repair or replace, replace the drive.

Note:

These conditions are provided for the purpose of replacing parts to maintain performance. Unsatisfactory conditions or heavy use will make it necessary for you to replace some parts more frequently than other parts. Performance life estimate is based on the yearly average of these use conditions.

- Surrounding air temperature
  IP20/UL Open Type: 40 °C (104 °F)
- Load factor
  70%
- Operating rate
  8 hours a day

◆ Monitors that Display the Lifespan of Drive Components

The drive keypad shows percentage values for the replacement parts to help you know when you must replace those components. Use the monitors in Table 8.8 to check replacement periods. When the monitor value is 100%, the component is at the end of its useful life and there is an increased risk of drive malfunction. Yaskawa

recommends that you check the maintenance period regularly to make sure that you get the maximum performance life of the drive.

Table 8.8 Performance Life Monitors

Monitor No.	Parts	Description
U4-03	Cooling fan	Shows the total operation time of fans as 0 to 99999 hours. After this value is 99999, the drive automatically resets it to 0.
U4-04		Shows the total fan operation time as a percentage of the specified maintenance period.
U4-05	Electrolytic capacitor	Shows the total capacitor usage time as a percentage of the specified maintenance period.
U4-06	Soft charge bypass relay	Shows the number of times the drive is energized as a percentage of the performance life of the inrush circuit.
U4-07	IGBT	Shows the percentage of the maintenance period for the IGBTs.

◆ Alarm Outputs for Maintenance Monitors

You can use *H2-xx [MFDO Function Selection]* to send a message that tells you when a specified component is near the end of its performance life estimate. Set the applicable value to *H2-xx* as shown in Table 8.9 for your component.

When the specified component is near the end of its performance life estimate, the MFDO terminals set for *H2-xx = 10 and 2F [Maintenance Notification]* will activate, and the keypad will show an alarm that identifies the component to replace.

Set *o4-16 [Maintenance Monitoring Selection]* to enable or disable *LT-1 [Cooling Fan Maintenance Time]* to *LT-4 [IGBT Maintenance Time]* detections.

Table 8.9 Maintenance Period Alarms

Display	Alarm Name	Cause	Possible Solutions	MFDO (Setting Value in H2-xx)
LT-1	Cooling Fan Maintenance Time	The cooling fan is at 90% of its expected performance life.	Replace the cooling fan, then set *o4-03 = 0 [Fan Operation Time Setting = 0 h]* to reset the cooling fan operation time.	10, 2F
LT-2	Capacitor Maintenance Time	The capacitors for the main circuit and control circuit are at 90% of expected performance life.	Replace the board or the drive. Contact Yaskawa or your nearest sales representative to replace the board.	
LT-3	SoftChargeBypassRelay MainteTime	The soft charge bypass relay is at 90% of its performance life estimate.	Replace the board or the drive. Contact Yaskawa or your nearest sales representative to replace the board.	
LT-4	IGBT Maintenance Time	The IGBT is at 90% of its expected performance life.	Check the load, carrier frequency, and output frequency.	

◆ Related Parameters

Replace the component, then set *o4-03, o4-05, o4-07, and o4-09 [Maintenance Setting] = 0* to reset the Maintenance Monitor. If these parameters are not reset after the corresponding parts have been replaced, the Maintenance Monitor function will continue to count down the performance life from the value that was reached with the old part. If the Maintenance Monitor is not reset, the drive will not have the correct value of the performance life for the new component.

Note:

The maintenance period changes for different operating environments.

Table 8.10 Maintenance Setting Parameters

No.	Name	Function
o4-03	Fan Operation Time Setting	Sets the value from which to start the cumulative drive cooling fan operation time in 10-hour units. **Note:** When *o4-03 = 30*, the drive will count the operation time for the cooling fan from 300 hours and *U4-03 [Cooling Fan Ope Time]* will show *300 h*.
o4-05	Capacitor Maintenance Setting	Sets the value from which to start the count for the main circuit capacitor maintenance period as a percentage.
o4-07	Softcharge Relay Maintenance Set	Sets as a percentage the value from which to start the count for the soft charge bypass relay maintenance time.
o4-09	IGBT Maintenance Setting	Sets the value from which to start the count for the IGBT maintenance period as a percentage.

8.4 Replace Cooling Fans and Circulation Fans

⚠ CAUTION **Injury to Personnel**

Some fan units are not easily accessible from a standing position. Make sure that you can safely and comfortably remove and replace the fan.
If you try to remove a fan that you cannot easily access, the fan unit can fall and cause minor to moderate injury.

NOTICE

Use the instructions in this manual to replace the cooling fans. When you do maintenance on the fans, replace all of the fans to increase product life.
If you install the fans incorrectly, it can cause damage to the drive.

◆ Cooling Fans and Circulation Fans by Drive Model

Table 8.11 Cooling Fans and Circulation Fans (Three-Phase 200 V Class)

Model	Cooling Fan	Circulation Fan	Procedure	Ref.
2022	1	-	Procedure A	365
2031, 2041	2	-	Procedure B	367
2059 - 2075	2	-	Procedure C	370
2110 - 2225	2	-	Procedure D	372
2269, 2354	2	-	Procedure E	375
2432, 2519	3	1	Procedure F	377

Table 8.12 Cooling Fans and Circulation Fans (Three-Phase 400 V Class)

Model	Cooling Fan	Circulation Fan	Procedure	Ref.
4012	1	-	Procedure A	365
4019, 4023	2	-	Procedure B	367
4030 - 4056	2	-	Procedure C	370
4075 - 4188	2	-	Procedure D	372
4225 - 4325	2	-	Procedure E	375
4380	2	1	Procedure F	377

◆ Fan Replacement (Procedure A)

⚠ DANGER **Electrical Shock Hazard**

Do not examine, connect, or disconnect wiring on an energized drive. Before servicing, disconnect all power to the equipment and wait for the time specified on the warning label at a minimum. The internal capacitor stays charged after the drive is de-energized. The charge indicator LED extinguishes when the DC bus voltage decreases below 50 Vdc. When all indicators are OFF, remove the covers before measuring for dangerous voltages to make sure that the drive is safe.
If you do work on the drive when it is energized, it will cause serious injury or death from electrical shock.

⚠ CAUTION **Burn Hazard**

Do not touch a hot drive heatsink. De-energize the drive, wait for a minimum of 15 minutes, then make sure that the heatsink is cool before you replace the cooling fans.
If you touch a hot drive heatsink, it can burn you.

NOTICE

Use the instructions in this manual to replace the cooling fans. When you do maintenance on the fans, replace all of the fans to increase product life.
If you install the fans incorrectly, it can cause damage to the drive.

■ Fan Removal

1. To remove the fan finger guard from the drive, push the hooks on the left and right sides of it and pull up.

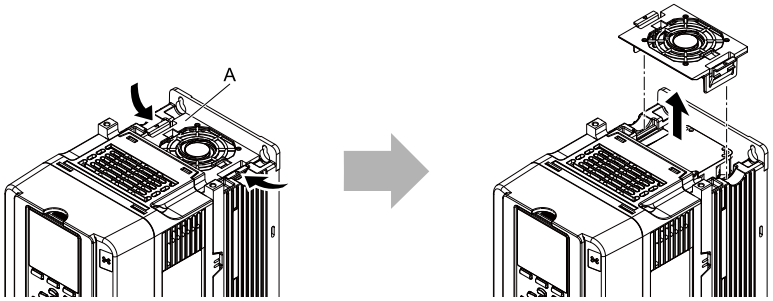

A - Fan finger guard

Figure 8.1 Remove the Fan Finger Guard

2. Pull the cooling fan straight up from the drive. Disconnect the relay connector and remove the fan from the drive.

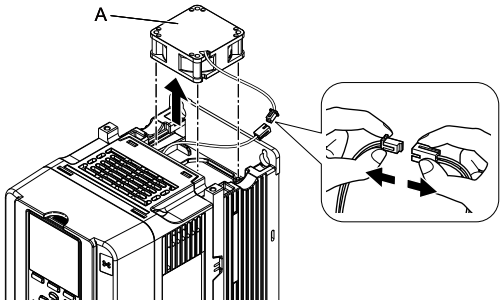

A - Cooling fan

Figure 8.2 Remove the Cooling Fan

■ Fan Installation

Reverse the removal procedure for fan installation.

1. Connect the relay connector between the drive and cooling fan.

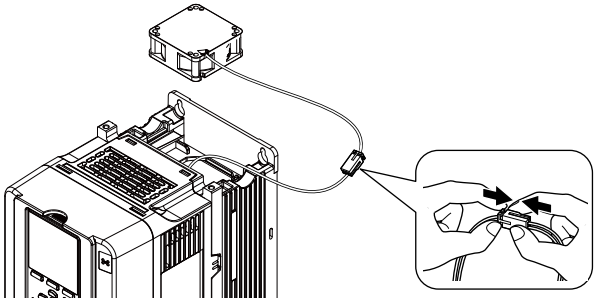

Figure 8.3 Connect the Relay Connector

2. Align the notch on the fan with the pin on the drive and install the cooling fan in the drive.

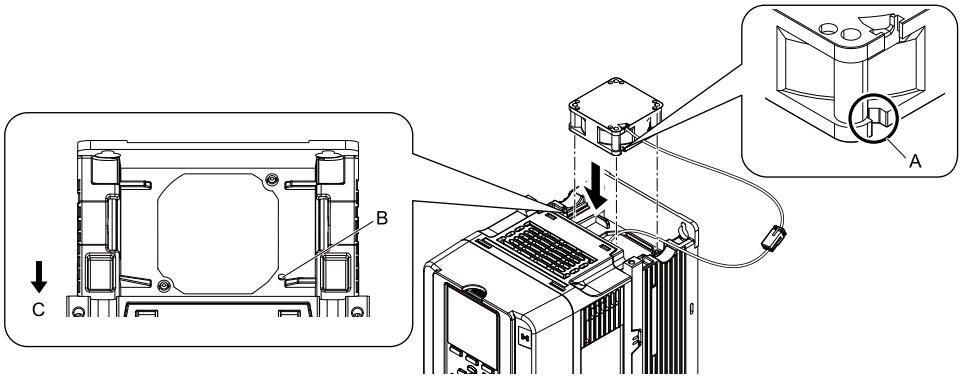

A - Notch on fan
B - Alignment pin on drive
C - Front of drive

Figure 8.4 Install the Cooling Fan

3. Put the cable and connector in the recess of the drive.

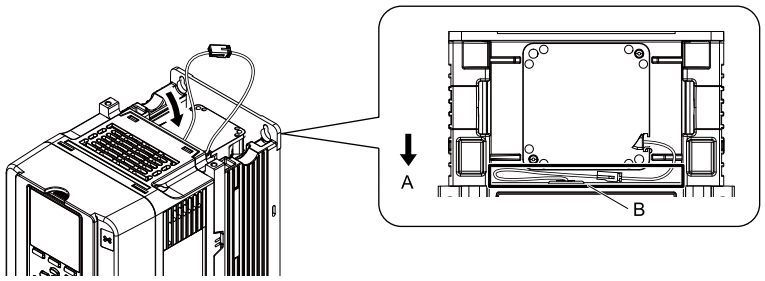

A - Front of drive
B - Space for cable *1

Figure 8.5 Put the Cable and Connector in the Drive Recess

*1 Make sure that the cable and connector are in the correct space.

4. Insert the fan finger guard straight until the hooks click into place.

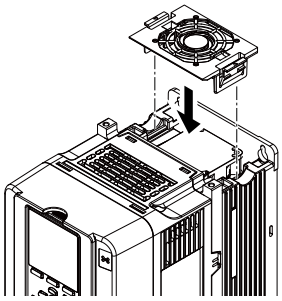

Figure 8.6 Reattach the Fan Finger Guard

5. Energize the drive and set *o4-03 = 0 [Fan Operation Time Setting = 0 h]* to reset the fan operation time.

◆ Fan Replacement (Procedure B)

⚠ DANGER Electrical Shock Hazard

Do not examine, connect, or disconnect wiring on an energized drive. Before servicing, disconnect all power to the equipment and wait for the time specified on the warning label at a minimum. The internal capacitor stays charged after the drive is de-energized. The charge indicator LED extinguishes when the DC bus voltage decreases below 50 Vdc. When all indicators are OFF, remove the covers before measuring for dangerous voltages to make sure that the drive is safe.
If you do work on the drive when it is energized, it will cause serious injury or death from electrical shock.

⚠ CAUTION **Burn Hazard**

Do not touch a hot drive heatsink. De-energize the drive, wait for a minimum of 15 minutes, then make sure that the heatsink is cool before you replace the cooling fans.
If you touch a hot drive heatsink, it can burn you.

NOTICE

Use the instructions in this manual to replace the cooling fans. When you do maintenance on the fans, replace all of the fans to increase product life.
If you install the fans incorrectly, it can cause damage to the drive.

■ Fan Removal

1. To remove the fan finger guard from the drive, push the hook on the back side of the fan finger guard and pull up.

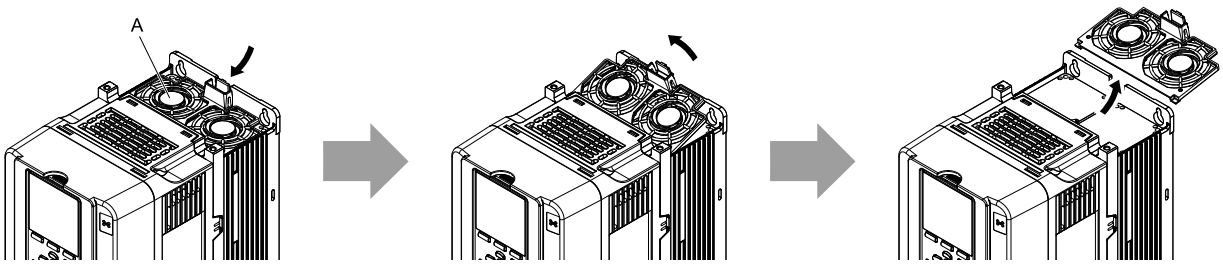

A - Fan finger guard

Figure 8.7 Remove the Fan Finger Guard

2. Pull the cooling fans straight up from the drive. Disconnect the relay connectors and remove the fans from the drive.

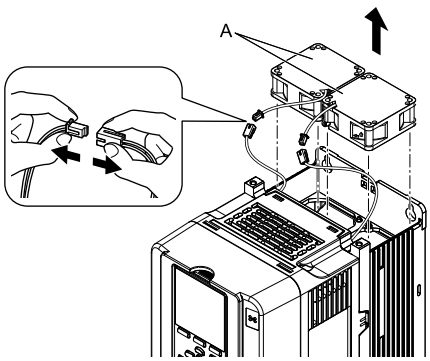

A - Cooling fans

Figure 8.8 Remove the Cooling Fans

■ Fan Installation

Reverse the removal procedure for fan installation.

1. Connect the relay connectors between the drive and cooling fans.

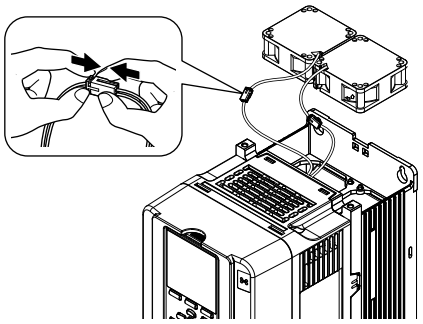

Figure 8.9 Connect the Relay Connectors

2. Align the notches on the fans with the pins on the drive and install the cooling fans in the drive.

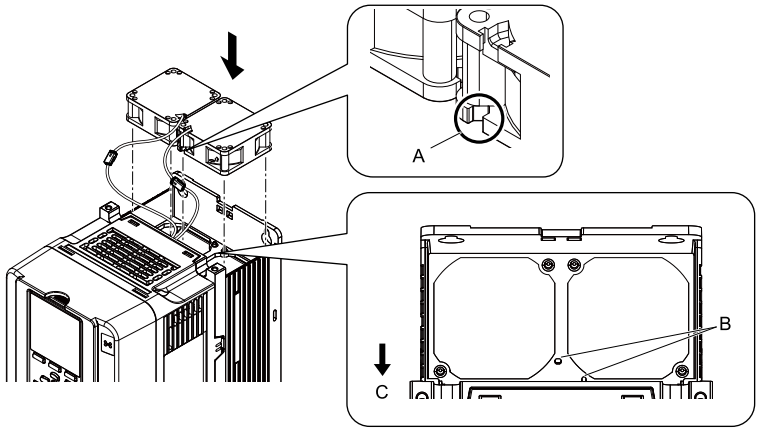

A - Notch on fan
B - Alignment pins on drive
C - Front of drive

Figure 8.10 Install the Cooling Fans

3. Put the cables in the recess of the drive.

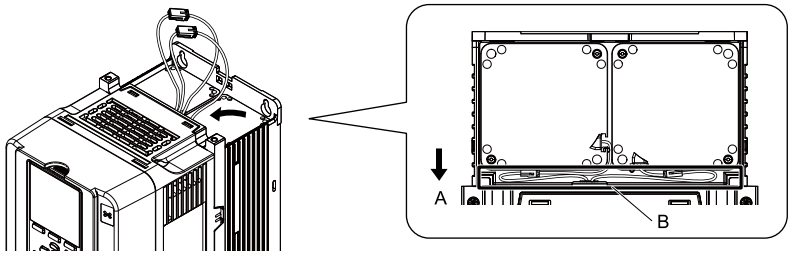

A - Front of drive
B - Space for cables *1

Figure 8.11 Put the Cables and Connectors in the Drive Recess

*1 Make sure that the cables and connectors are in the correct space.

4. Hold the fan finger guard at an angle and put the connector tabs on the fan finger guard into the holes on the drive.

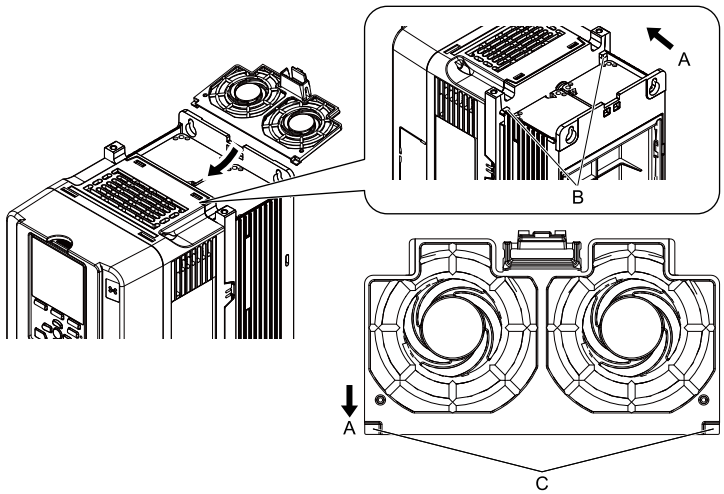

A - Front of drive
B - Drive holes
C - Connector tabs

Figure 8.12 Reattach the Fan Finger Guard

5. Push the hook on the back side of the fan finger guard and click it into place on the drive.

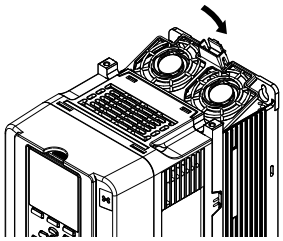

Figure 8.13 Reattach the Fan Finger Guard

6. Energize the drive and set *o4-03 = 0 [Fan Operation Time Setting = 0 h]* to reset the fan operation time.

◆ Fan Replacement (Procedure C)

⚠ DANGER Electrical Shock Hazard
Do not examine, connect, or disconnect wiring on an energized drive. Before servicing, disconnect all power to the equipment and wait for the time specified on the warning label at a minimum. The internal capacitor stays charged after the drive is de-energized. The charge indicator LED extinguishes when the DC bus voltage decreases below 50 Vdc. When all indicators are OFF, remove the covers before measuring for dangerous voltages to make sure that the drive is safe.
If you do work on the drive when it is energized, it will cause serious injury or death from electrical shock.

⚠ CAUTION Burn Hazard
Do not touch a hot drive heatsink. De-energize the drive, wait for a minimum of 15 minutes, then make sure that the heatsink is cool before you replace the cooling fans.
If you touch a hot drive heatsink, it can burn you.

NOTICE
Use the instructions in this manual to replace the cooling fans. When you do maintenance on the fans, replace all of the fans to increase product life.
If you install the fans incorrectly, it can cause damage to the drive.

■ Fan Removal

1. To remove the fan finger guard from the drive, push the hooks on the left and right sides of it and pull up.

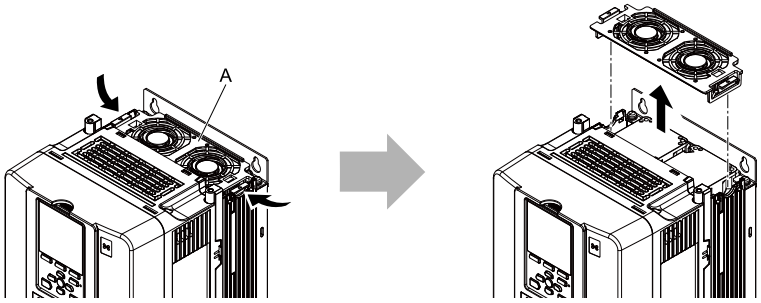

A - Fan finger guard

Figure 8.14 Remove the Fan Finger Guard

2. Pull the cooling fans straight up from the drive. Disconnect the relay connectors and remove the fans from the drive.

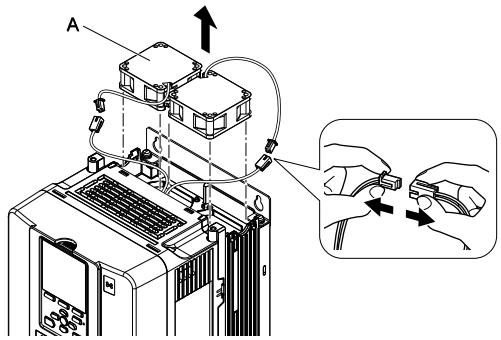

A - Cooling fans

Figure 8.15 Remove the Cooling Fans

■ Fan Installation

Reverse the removal procedure for fan installation.

1. Connect the relay connectors between the drive and cooling fans.

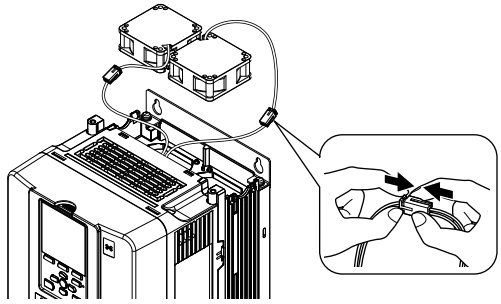

Figure 8.16 Connect the Relay Connectors

2. Align the notches on the fans with the pins on the drive and install the cooling fans in the drive.

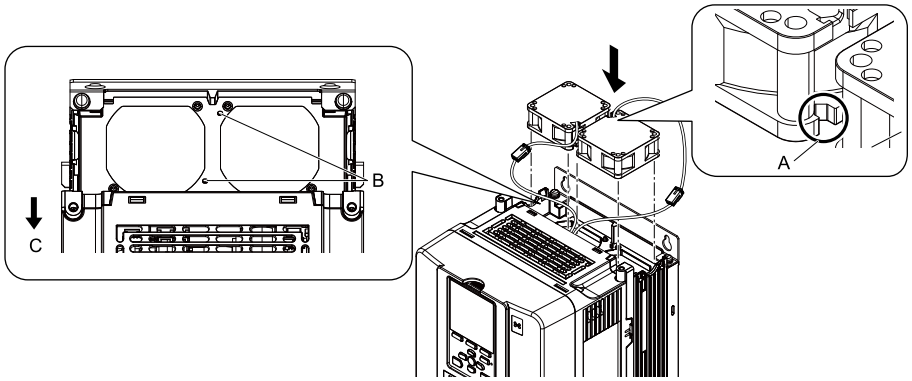

A - Notch on fan
B - Alignment pins on drive
C - Front of drive

Figure 8.17 Install the Cooling Fans

3. Put the cables and connectors in the recess of the drive.

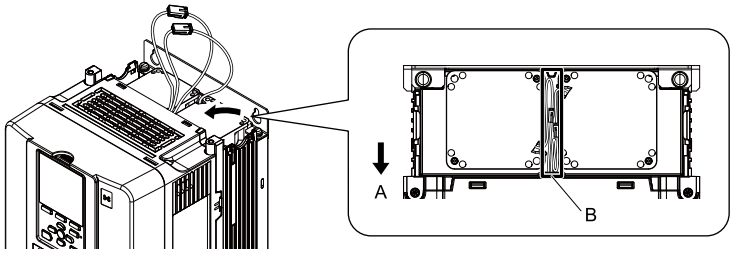

A - Front of drive **B - Space for cables** *1

Figure 8.18 Put the Cables and Connectors in the Drive Recess

*1 Make sure that the cables and connectors are in the correct space.

4. Insert the fan finger guard straight until the hooks click into place.

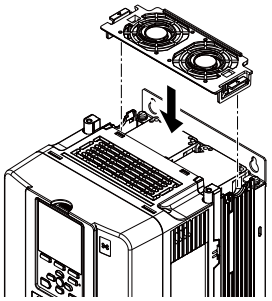

Figure 8.19 Reattach the Fan Finger Guard

5. Energize the drive and set *o4-03 = 0 [Fan Operation Time Setting = 0 h]* to reset the fan operation time.

◆ Fan Replacement (Procedure D)

⚠ DANGER Electrical Shock Hazard

Do not examine, connect, or disconnect wiring on an energized drive. Before servicing, disconnect all power to the equipment and wait for the time specified on the warning label at a minimum. The internal capacitor stays charged after the drive is de-energized. The charge indicator LED extinguishes when the DC bus voltage decreases below 50 Vdc. When all indicators are OFF, remove the covers before measuring for dangerous voltages to make sure that the drive is safe.
If you do work on the drive when it is energized, it will cause serious injury or death from electrical shock.

⚠ CAUTION Burn Hazard

Do not touch a hot drive heatsink. De-energize the drive, wait for a minimum of 15 minutes, then make sure that the heatsink is cool before you replace the cooling fans.
If you touch a hot drive heatsink, it can burn you.

NOTICE

Use the instructions in this manual to replace the cooling fans. When you do maintenance on the fans, replace all of the fans to increase product life.
If you install the fans incorrectly, it can cause damage to the drive.

■ Fan Removal

1. To remove the fan finger guard from the drive, push the hooks on the left and right sides of it and pull up.

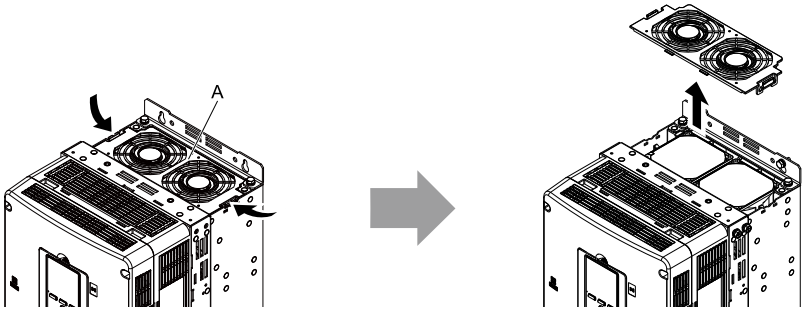

A - Fan finger guard

Figure 8.20 Remove the Fan Finger Guard

2. Pull the cooling fans straight up from the drive. Disconnect the relay connectors and remove the fans from the drive.

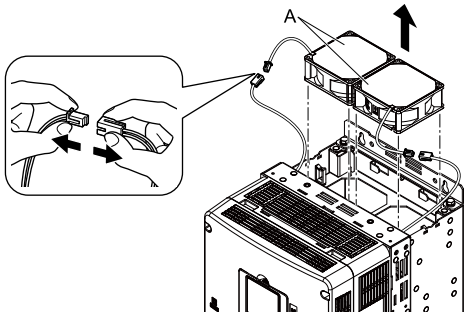

A - Cooling fans

Figure 8.21 Remove the Cooling Fans

■ Fan Installation

Reverse the removal procedure for fan installation.

1. Connect the relay connectors between the drive and cooling fans.

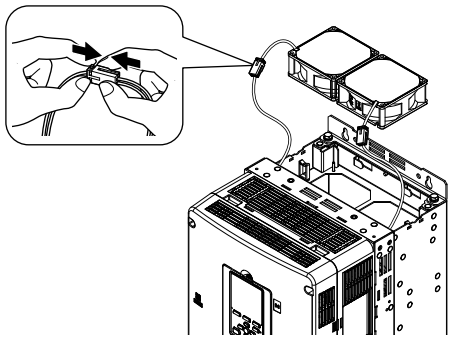

Figure 8.22 Connect the Relay Connectors

2. Align the notches on the fans with the pins on the drive and install the cooling fans in the drive.

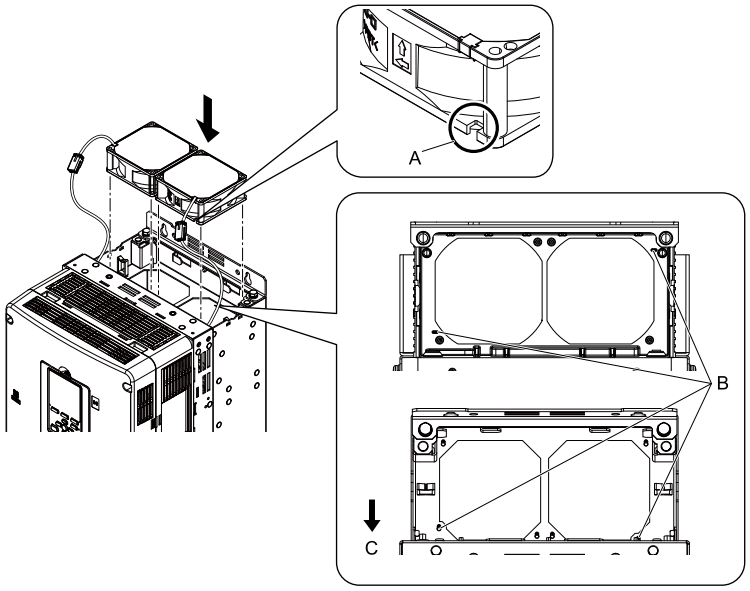

A - Notch on fan
B - Alignment pins on drive
C - Front of drive

Figure 8.23 Install the Cooling Fans

3. Put the cables and connectors in the recess of the drive.

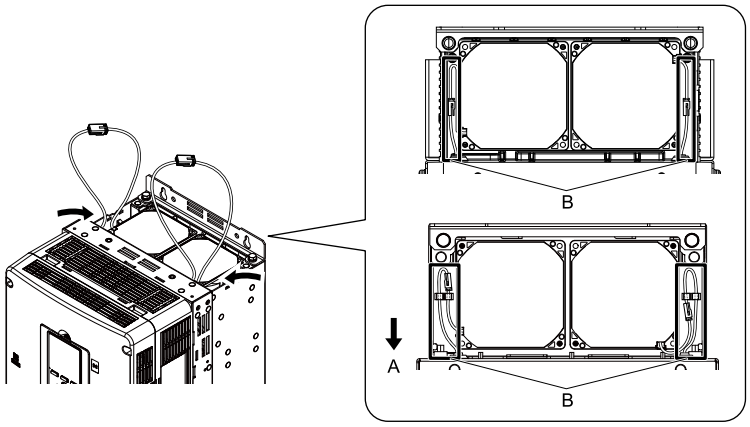

A - Front of drive
B - Space for cables *1

Figure 8.24 Put the Cables and Connectors in the Drive Recess

*1 Make sure that the cables and connectors are in the correct space.

4. Push the hooks on the left and right sides of the fan finger guard and click it into place on the drive.

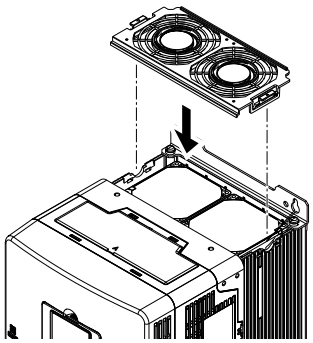

Figure 8.25 Reattach the Fan Finger Guard

5. Energize the drive and set *o4-03 = 0 [Fan Operation Time Setting = 0 h]* to reset the fan operation time.

◆ Fan Replacement (Procedure E)

⚠ DANGER Electrical Shock Hazard

Do not examine, connect, or disconnect wiring on an energized drive. Before servicing, disconnect all power to the equipment and wait for the time specified on the warning label at a minimum. The internal capacitor stays charged after the drive is de-energized. The charge indicator LED extinguishes when the DC bus voltage decreases below 50 Vdc. When all indicators are OFF, remove the covers before measuring for dangerous voltages to make sure that the drive is safe.
If you do work on the drive when it is energized, it will cause serious injury or death from electrical shock.

⚠ CAUTION Burn Hazard

Do not touch a hot drive heatsink. De-energize the drive, wait for a minimum of 15 minutes, then make sure that the heatsink is cool before you replace the cooling fans.
If you touch a hot drive heatsink, it can burn you.

NOTICE

Use the instructions in this manual to replace the cooling fans. When you do maintenance on the fans, replace all of the fans to increase product life.
If you install the fans incorrectly, it can cause damage to the drive.

■ Fan Removal

1. To remove the fan finger guard from the drive, push the tabs on the left and right sides of it and pull up the back side of the guard.

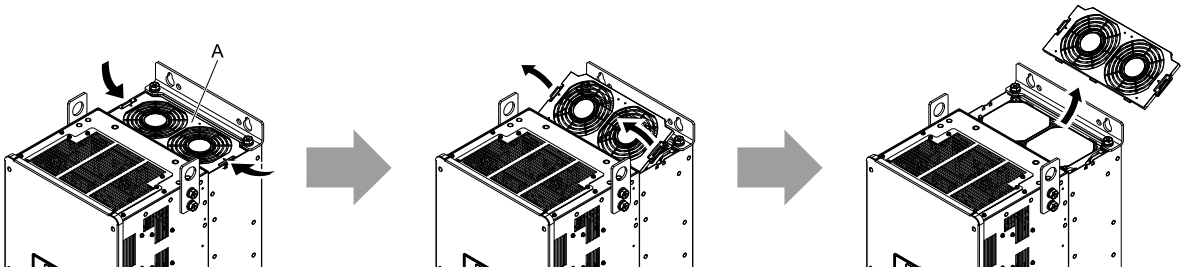

A - Fan finger guard

Figure 8.26 Remove the Fan Finger Guard

2. Pull the cooling fans straight up from the drive. Disconnect the relay connectors and remove the fans from the drive.

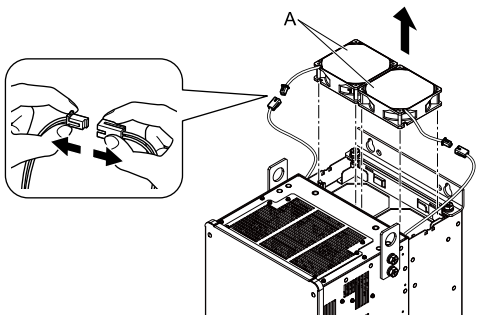

A - Cooling fans

Figure 8.27 Remove the Cooling Fans

■ Fan Installation

Reverse the removal procedure for fan installation.

1. Connect the relay connectors between the drive and cooling fans.

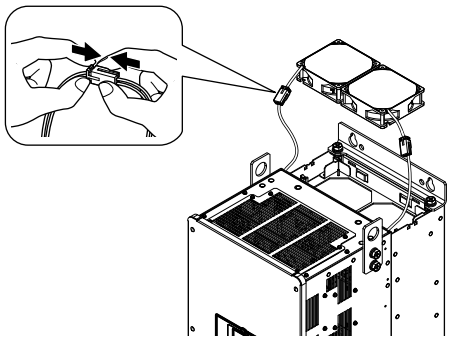

Figure 8.28 Connect the Relay Connectors

2. Align the notches on the fans with the pins on the drive and install the cooling fans in the drive.

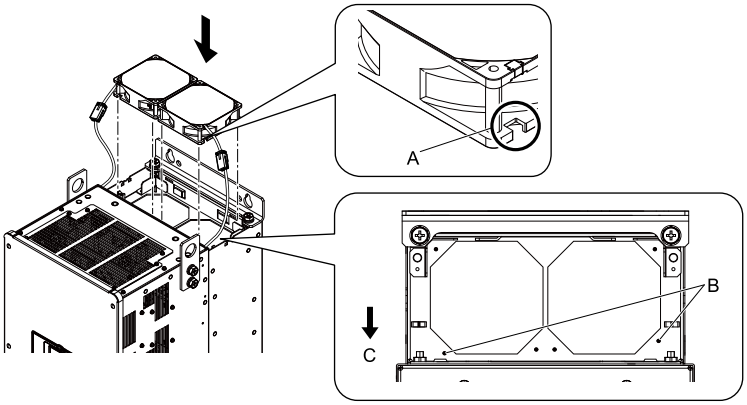

A - Notch on fan
B - Alignment pins on drive
C - Front of drive

Figure 8.29 Install the Cooling Fans

3. Put the cables and connectors in the recess of the drive.

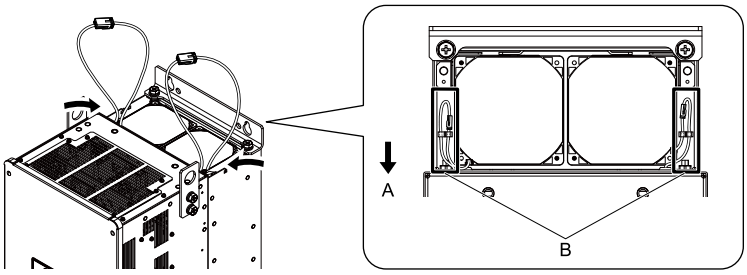

A - Front of drive
B - Space for cables *1

Figure 8.30 Put the Cables and Connectors in the Drive Recess

*1 Make sure that the cables and connectors are in the correct space.

4. Hold the fan finger guard at an angle and put the connector tabs on the fan finger guard into the holes on the drive.

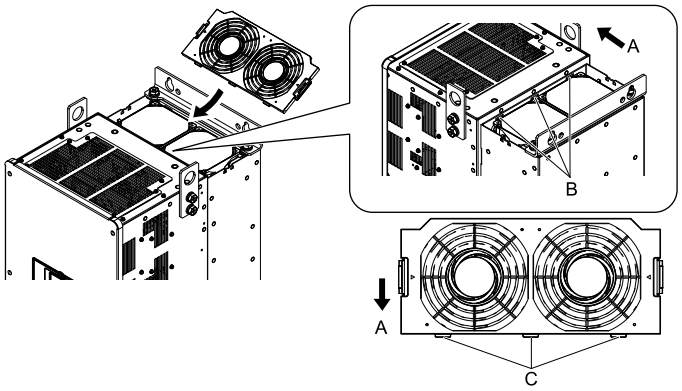

A - Front of drive
B - Drive holes
C - Connector tabs

Figure 8.31 Reattach the Fan Finger Guard

5. Push the hooks on the left and right sides of the fan finger guard and click it into place on the drive.

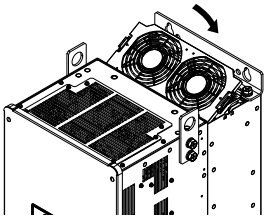

Figure 8.32 Reattach the Fan Finger Guard

6. Energize the drive and set *o4-03 = 0 [Fan Operation Time Setting = 0 h]* to reset the fan operation time.

◆ Fan Replacement (Procedure F)

⚠ DANGER Electrical Shock Hazard
Do not examine, connect, or disconnect wiring on an energized drive. Before servicing, disconnect all power to the equipment and wait for the time specified on the warning label at a minimum. The internal capacitor stays charged after the drive is de-energized. The charge indicator LED extinguishes when the DC bus voltage decreases below 50 Vdc. When all indicators are OFF, remove the covers before measuring for dangerous voltages to make sure that the drive is safe.
If you do work on the drive when it is energized, it will cause serious injury or death from electrical shock.

⚠ CAUTION Burn Hazard
Do not touch a hot drive heatsink. De-energize the drive, wait for a minimum of 15 minutes, then make sure that the heatsink is cool before you replace the cooling fans.
If you touch a hot drive heatsink, it can burn you.

NOTICE
Use the instructions in this manual to replace the cooling fans. When you do maintenance on the fans, replace all of the fans to increase product life.
If you install the fans incorrectly, it can cause damage to the drive.

■ Fan Removal

1. To remove the fan finger guards from the drive, push the hook on the back side of each guard and pull up.

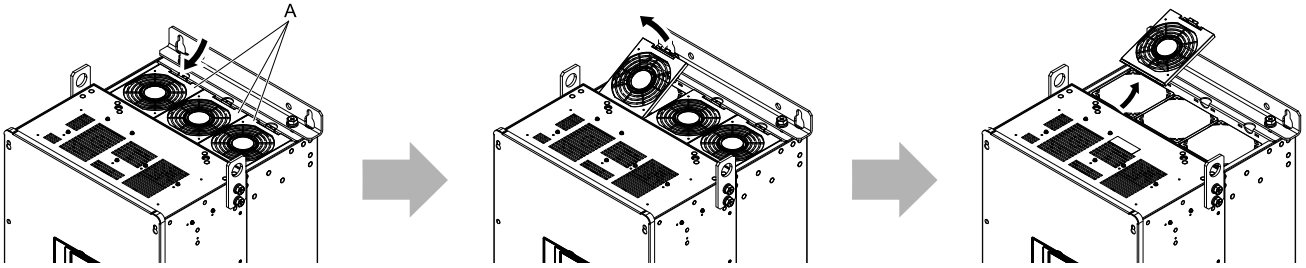

A - Fan finger guards

Figure 8.33 Remove the Fan Finger Guards

2. Pull the cooling fans straight up from the drive. Disconnect the relay connectors and remove the fans from the drive.

Note:
The number of fans is different for different drive models.

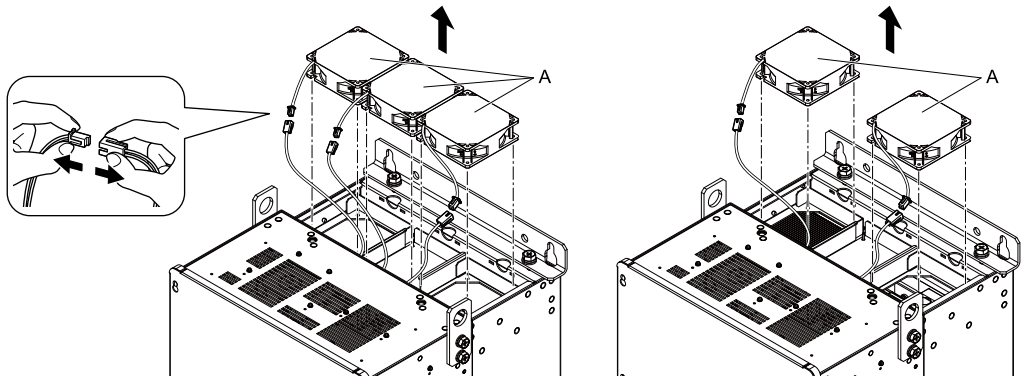

A - Cooling fans

Figure 8.34 Remove the Cooling Fans

■ Fan Installation

Reverse the removal procedure for fan installation.

1. Connect the relay connectors between the drive and cooling fans.

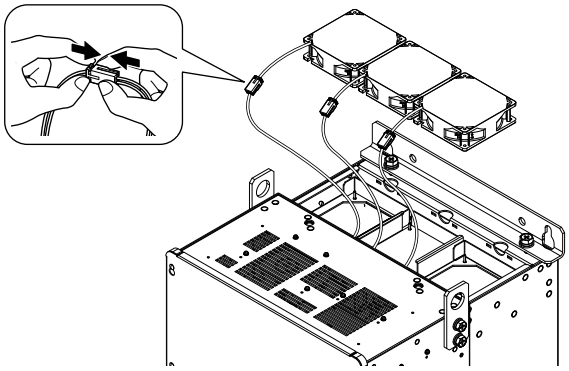

Figure 8.35 Connect the Relay Connectors

2. Align the notches on the fans with the pins on the drive and install the cooling fans in the drive.

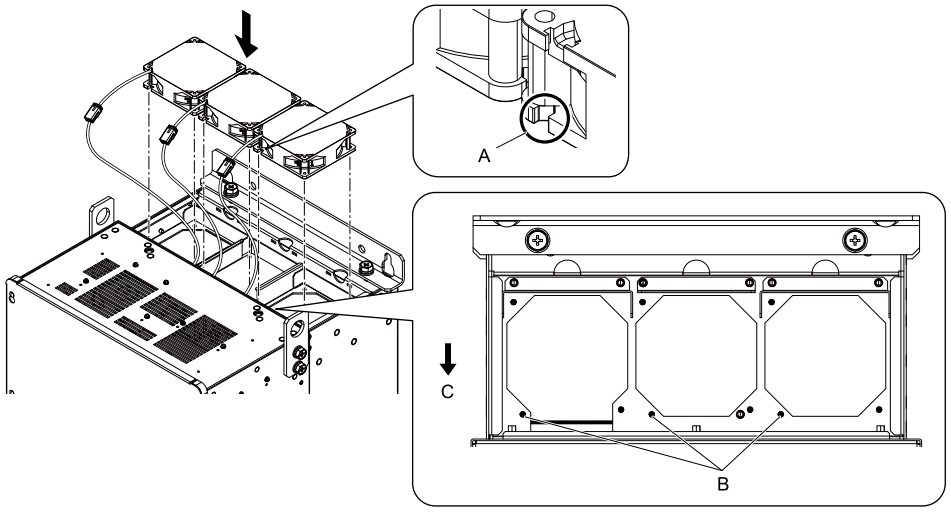

A - Notch on fan
B - Alignment pins on drive
C - Front of drive

Figure 8.36 Install the Cooling Fans

3. Put the cables and connectors in the recess of the drive.

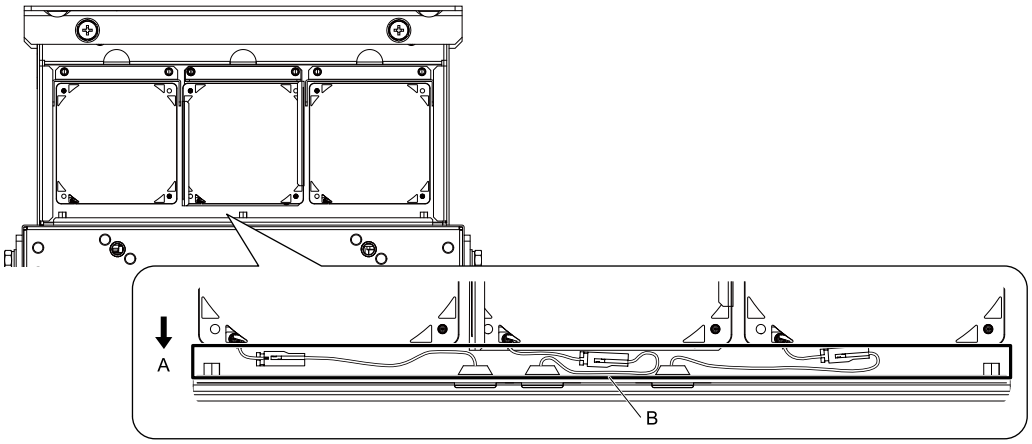

A - Front of drive
B - Space for cables *1

Figure 8.37 Put the Cables and Connectors in the Drive Recess

*1 Make sure that the cables and connectors are in the correct space.

4. Hold the fan finger guards at an angle and put the connector tabs on the fan finger guards into the holes on the drive.

Note:
When you install the cooling fans, make sure that you do not pinch cables between the fan finger guards and the drive.

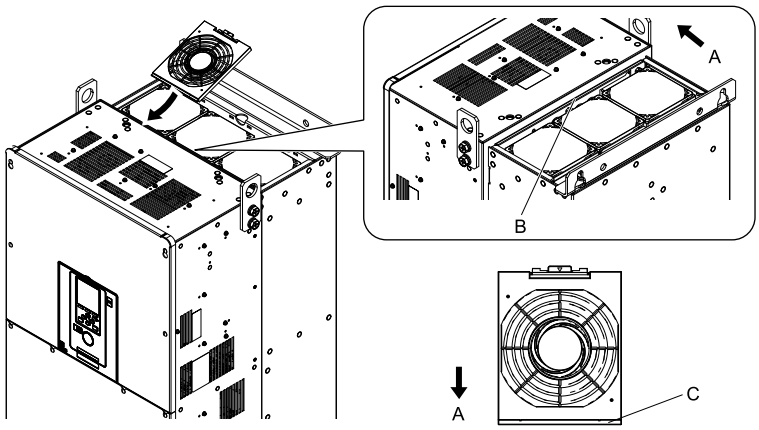

A - Front of drive
B - Insertion area
C - Connector tab

Figure 8.38 Reattach the Fan Finger Guards

5. Push the hooks on the back side of the fan finger guards and click them into place on the drive.

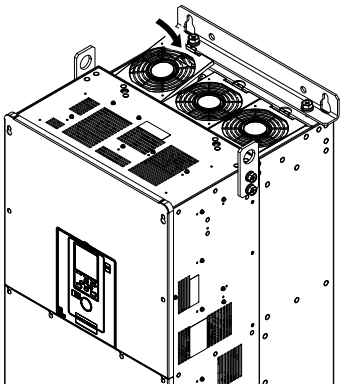

Figure 8.39 Reattach the Fan Finger Guards

6. Energize the drive and set *o4-03 = 0 [Fan Operation Time Setting = 0 h]* to reset the fan operation time.

■ Circulation Fan Removal

Remove the drive cover before you start this procedure.

⚠ CAUTION Crush Hazard
Loosen the cover screws. Do not fully remove them.
If you fully remove the cover screws, the terminal cover can fall and cause moderate injury.

1. Remove the cable from the clamps.

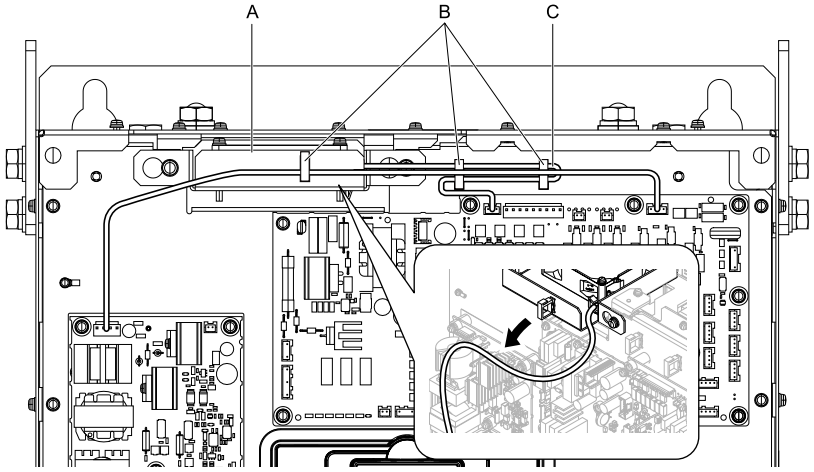

A - Fan unit
B - Clamps
C - Fan cable

Figure 8.40 Remove the Fan Cable

2. Loosen the screws that safety the fan unit and slide the fan unit to the right.

Note:
To remove the fan unit, it is only necessary to loosen the screws.

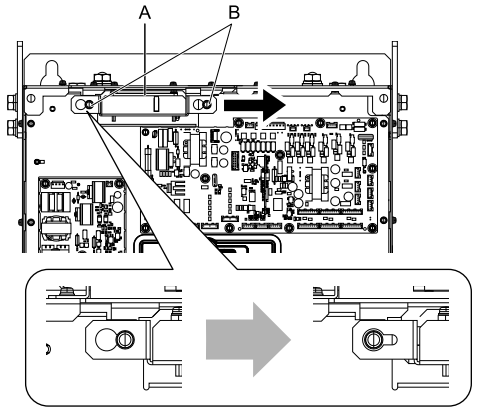

A - Fan unit
B - Screws

Figure 8.41 Slide the Fan Unit

3. Disconnect the relay connector and remove the fan unit.

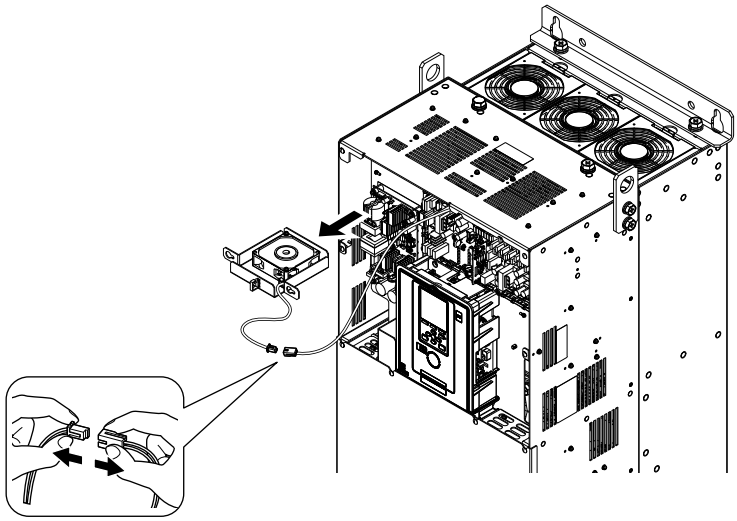

Figure 8.42 Remove the Fan Unit

4. Remove the screws that safety the circulation fan and remove the fan.

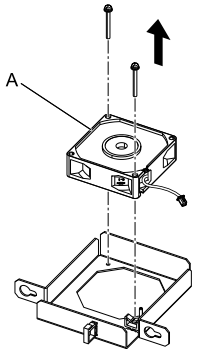

A - Circulation fan

Figure 8.43 Remove the Circulation Fan

■ Circulation Fan Installation

Reverse the removal procedure for fan installation.

1. Connect the relay connector between the drive and circulation fan.

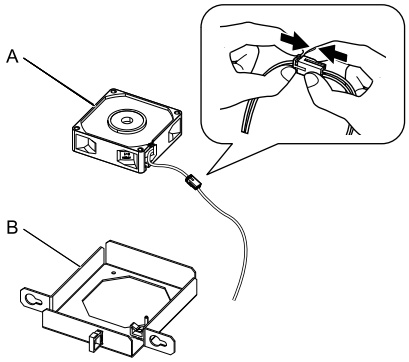

A - Circulation fan **B - Fan unit base**

Figure 8.44 Connect the Relay Connector

2. Align the pin on the fan unit base with the notch on the fan and put the fan in the fan unit base, then use the screws to safety it.

   Tighten the screws to a correct tightening torque:

   • 0.98 N·m to 1.33 N·m (8.67 lbf·in to 11.77 lbf·in)

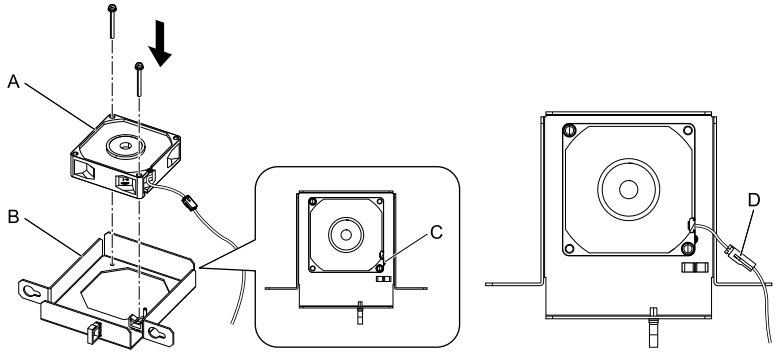

A - Circulation fan **C - Alignment pin on fan unit base**
B - Fan unit base **D - Circulation fan connector**

Figure 8.45 Install the Circulation Fan

3. Safety the fan cable through the clamp.

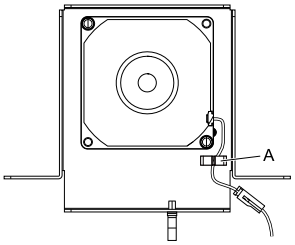

A - Clamp

Figure 8.46 Safety the Fan Cable

4. Put the fan unit into the specified location and slide it to the left, then use screws to connect it to the drive. Tighten the screws to a correct tightening torque:
   - 0.98 N·m to 1.33 N·m (8.67 lbf·in to 11.77 lbf·in)

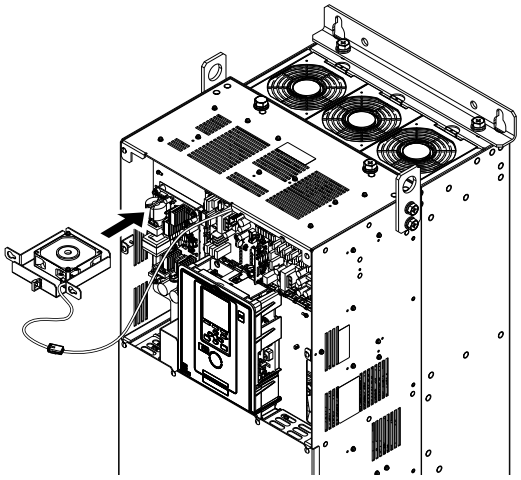

Figure 8.47 Install the Fan Unit

5. Safety the cable through the clamps.

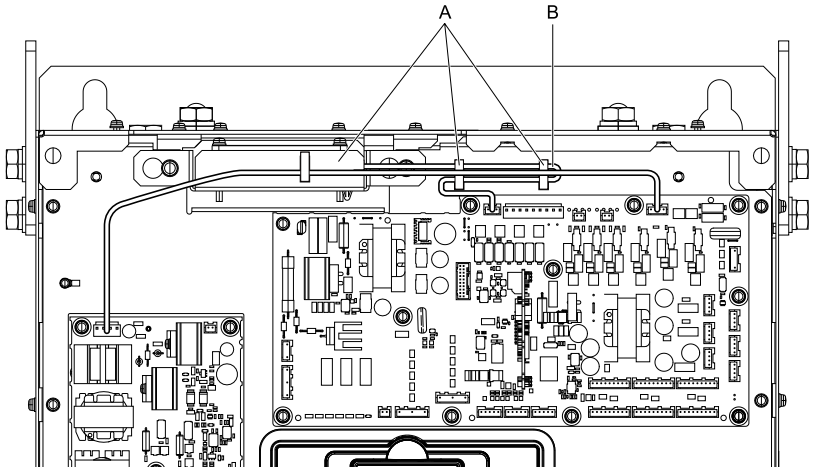

A - Clamps **B - Fan cable**

Figure 8.48 Safety the Fan Cable through the Clamps

6. Install the drive cover.
7. Energize the drive and set *o4-03 = 0 [Fan Operation Time Setting = 0 h]* to reset the fan operation time.

8.5 Replace the Drive

◆ About the Control Circuit Terminal Block

You can remove the control circuit terminal block of the drive and install a new terminal block. If there is a failure in the drive, you can use this feature to easily replace the control circuit terminal block.

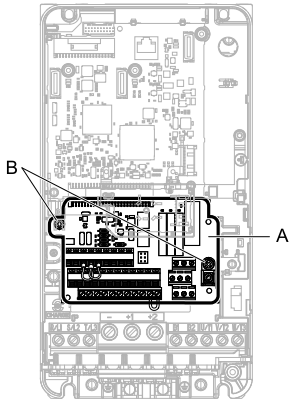

A - Control circuit terminal block

B - Control circuit terminal block fastening screw

Figure 8.49 Control Circuit Terminal Block

◆ Drive Replacement

⚠ DANGER Electrical Shock Hazard
Disconnect all power to the drive and wait for the time specified on the warning label before you remove covers. Check the drive for dangerous voltages before servicing or repair.
If you do work on the drive when it is energized and there is no cover over the electronic circuits, it will cause serious injury or death from electrical shock. The drive has internal capacitors that stay charged after you de-energize the drive.

⚠ WARNING Electrical Shock Hazard
Only let approved personnel install, wire, maintain, examine, replace parts, and repair the drive. If personnel are not approved, it can cause serious injury or death.

⚠ DANGER Electrical Shock Hazard
Do not examine, connect, or disconnect wiring on an energized drive. Before servicing, disconnect all power to the equipment and wait for the time specified on the warning label at a minimum. The internal capacitor stays charged after the drive is de-energized. The charge indicator LED extinguishes when the DC bus voltage decreases below 50 Vdc. When all indicators are OFF, remove the covers before measuring for dangerous voltages to make sure that the drive is safe.
If you do work on the drive when it is energized, it will cause serious injury or death from electrical shock.

NOTICE Damage to Equipment
When you touch the drive and circuit boards, make sure that you observe correct electrostatic discharge (ESD) procedures.
If you do not follow procedures, it can cause ESD damage to the drive circuitry.

■ Notes on Wiring the Main Circuit Terminal Block

Read these notes before you wire the main circuit terminal block.

- Use UL-Listed, vinyl-coated insulated copper wires for operation with a continuous maximum permitted temperature of 75 °C at 600 V.
- Remove all unwanted objects that are near the terminal block connections.
- Remove the insulation from the connection wires to the wire stripping lengths shown in the manual.

- Do not use bent or crushed wires. Remove the damaged end of the wire before you use it. Incorrect connections can cause death or serious injury from fire.
- Do not solder stranded wire. Soldered wire connections can become loose over time and cause unsatisfactory drive performance.
- If you use stranded wire, make sure that all of the wire strands are in the connection. Also, do not twist the stranded wire too much. Incorrect connections can cause death or serious injury from fire.
- Put the wire all the way into the terminal block. Remove the insulation from the wire to the recommended wire stripping length to fit the wire with insulation in the plastic housing.
- Use a torque driver, torque ratchet, or torque wrench for the screws. A slotted driver or a hex tool will be necessary to wire the screw clamp terminal. Use applicable tools as specified by the recommended conditions in the product manual.
- If you use power tools to tighten the terminal screws, use a low speed setting (300 r/min to 400 r/min). Failure to obey can cause damage to the terminal screws.
- Users can purchase wiring tools from Yaskawa. Contact Yaskawa or your nearest sales representative for more information.
- Wire gauges on existing drive models to be replaced can be different than the wire gauge ranges on new drives. Contact Yaskawa or your nearest sales representative for more information about the connection procedures.
- Do not tighten the terminal screws at an angle of 5 degrees or more. Failure to obey can cause damage to the terminal screws.
- If you damage a terminal screw, contact Yaskawa or your nearest sales representative.

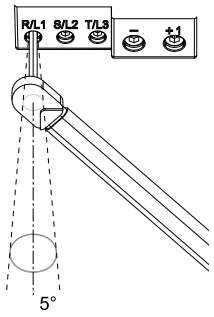

Figure 8.50 Permitted Angle

- Put the bit all the way into the hex socket to tighten the hex socket cap screw.
- When you tighten slotted screws, hold the straight-edge screwdriver perpendicularly to the screw. Make sure that you align the end of the straight-edge screwdriver with the screw groove.

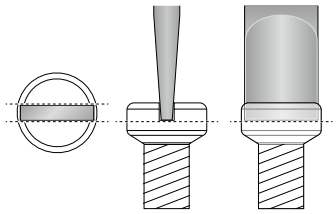

Figure 8.51 Tightening Slotted Screws

- After you connect the wires to the terminal block, lightly pull on the wires to make sure that they do not come out of the terminals.
- Remove the correct section of the wiring cover to make wiring easier.
- Do not let strain on the wiring cause damage. Use a strain relief near the wiring to release the tension. Refer to Figure 8.52 for an example.

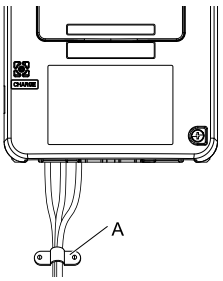

A - Cable clamp

Figure 8.52 Strain Relief Example

Table 8.13 Recommended Wiring Tools

Screw Size	Screw Shape	Adapter	Bit		Torque Driver Model (Tightening Torque)	Torque Wrench
			Model	Manufacturer		
M4	⊖	Bit	SF-BIT-SL 1,0X4,0-70	PHOENIX CONTACT	TSD-M 3NM (1.2 - 3 N·m (10.6 - 26.6 lbf·in))	N/A
M5 *1	⊖	Bit	SF-BIT-SL 1,2X6,5-70	PHOENIX CONTACT	Wire Gauge ≤ 25 mm ² (AWG 10): TSD-M 3NM (1.2 - 3 N·m (10.6 - 26.6 lbf·in))	Wire Gauge ≤ 25 mm ² (AWG 10): N/A
					Wire Gauge ≥ 30 mm ² (AWG 8): N/A	Wire Gauge ≥ 30 mm ² (AWG 8): 4.1 - 4.5 N·m (36.3 - 39.8 lbf·in) *2 *3
M6	⑤	Bit	SF-BIT-HEX 5-50	PHOENIX CONTACT	N/A	5 - 9 N·m (44.3 - 79.9 lbf·in) *2 *3
	⊖	Bit	SF-BIT-SL 1,2X6,5-70	PHOENIX CONTACT	N/A	3 - 3.5 N·m (26.6 - 31.0 lbf·in) *2 *3
M8	⑥	Bit	SF-BIT-HEX 6-50	PHOENIX CONTACT	N/A	8 - 12 N·m (70.8 - 106.2 lbf·in) *2 *3
M10	⑧	Bit	SF-BIT-HEX 8-50	PHOENIX CONTACT	N/A	12 - 14 N·m (106.2 - 123.9 lbf·in) *2 *3

*1 When wiring drive models 2059, 4094, and smaller, select the correct tools for the wire gauge.
*2 Use 6.35 mm (0.25 in) bit socket holder.
*3 Use a torque wrench that can apply this torque measurement range.

■ Remove the Control Circuit Terminal Block

Remove the keypad and the drive front cover before you do these steps.

1. Loosen the screws on the control circuit terminal block.

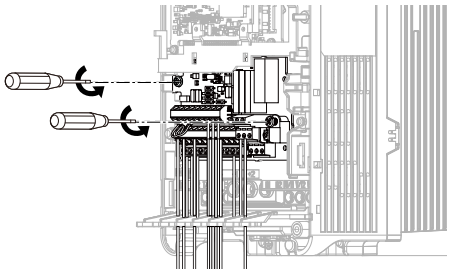

Figure 8.53 Loosen the Screws

2. Slide the wired control circuit terminal block down and remove it.

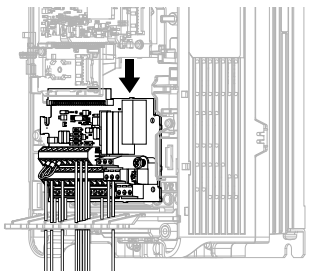

Figure 8.54 Remove the Control Circuit Terminal Block

■ Wire a New Drive

Remove the keypad, front cover, and control circuit terminal block of the new drive. Wire the drive to the main circuit terminal block before you install a wired control circuit terminal block.

1. Pull the wiring cover away from the drive to remove it.

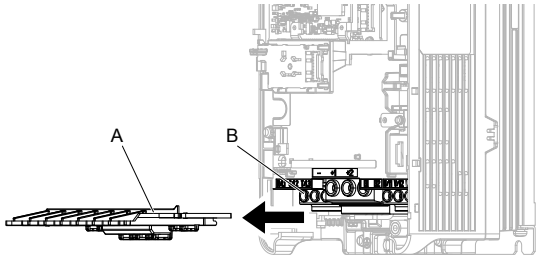

A - Wiring cover **B - Main circuit terminal block**

Figure 8.55 Remove the Wiring Cover

2. Loosen the main circuit terminal block screws to fully open the terminal block opening.

Note:
The terminal block openings ship from the factory as fully open.

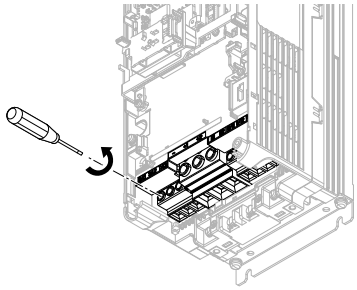

Figure 8.56 Loosen Terminal Block Screws

3. Put wires with prepared ends into the main circuit terminal block.

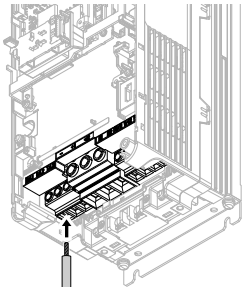

Figure 8.57 Install the Electrical Wire

Note:
If there is a jumper between terminals +1 and +2, loosen the terminal block screws to remove the jumper before you wire to terminals +1 and +2.

4. Tighten the screws to the specified torque.

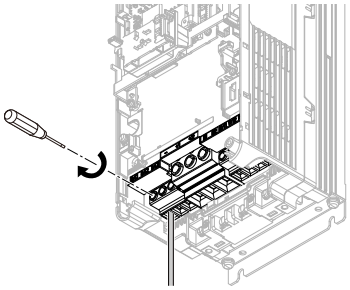

Figure 8.58 Tighten Terminal Block Screws

5. Check the terminal sign that you wired and use a nipper as shown in Figure 8.59 to clip the specified cutaway section of the wiring cover.

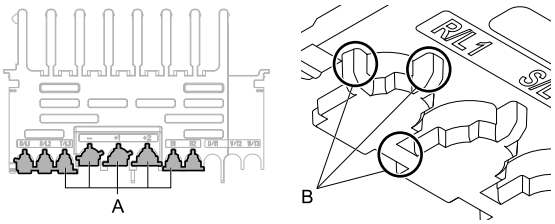

A - Cutaway sections

B - Use a diagonal-cutting pliers to clip this area.

Figure 8.59 Clip the Cutaway Section of the Wiring Cover

Note:
- Different drive models have different wiring cover shapes.
- Only clip the section of the wiring cover that applies to the wired terminal. If you clip areas that do not apply to wired terminals, the protective enclosure will not keep its IP20 protective level.
- Be careful when clipping the cutaway section of the wiring cover, as the section may fly out in unpredictable directions.
- Make sure that the clipped section does not cause damage to the wires.
- If you use wires that are not specified by Yaskawa, the protective enclosure could lose its IP20 protective level, although the wiring cover is correct. Contact Yaskawa or your nearest sales representative for more information.

6. Put the wiring cover in its initial position. Put the cables through the holes that you cut out of the wiring cover.

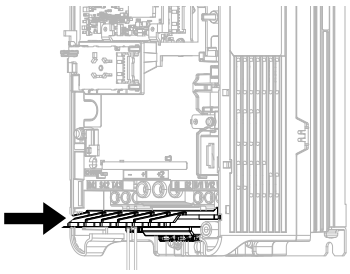

Figure 8.60 Reattach the Wiring Cover

■ Connect the Control Circuit Terminal Block

1. To put a wired control circuit terminal block in the drive, align it with the guides and move it straight up.

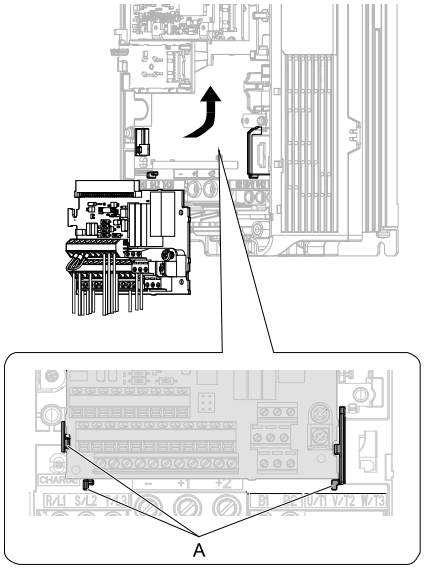

A - Guides

Figure 8.61 Put the Terminal Block into the Connector

2. Use M3 screws to safety the terminal block.
   Tighten the screws to a correct tightening torque:
   - M3 screws: 0.5 N·m to 0.6 N·m (4.4 lbf·in to 5.3 lbf·in)

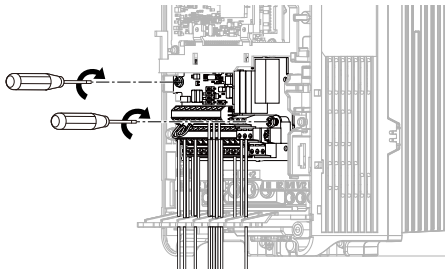

Figure 8.62 Safety the Terminal Block

3. Install the front cover and the keypad to their initial positions.
4. Check *o2-04 [Drive Model (KVA) Selection]*.

Note:
- When you save parameter information in a keypad that you installed before you replaced the terminal block, make sure that you use that keypad to restore the parameter data.
- To reset the performance life monitors for the components, set *o4-01 to o4-13 [Maintenance Period]*.

8.6 Replace the Keypad Battery

When the keypad battery is expired, the date and time go back to the default settings. Use this procedure to replace the battery.

⚠ WARNING Fire Hazard
Handle keypad batteries properly. Do not charge the battery or disassemble the keypad.
If the battery explodes, it can cause a fire.

To replace the battery, use a Hitachi Maxell "CR2016 Lithium Manganese Dioxide Lithium Battery" or an equivalent battery with these properties:

- Nominal voltage: 3 V
- Operating temperature range: -20 °C to +85 °C (-4 °F to +185 °F)

⚠ WARNING Fire Hazard
Do not disassemble batteries. Do not expose batteries to heat or fire.
If the battery explodes, it can cause a fire.

NOTICE Damage to Equipment
The keypad battery stays in use after you de-energize the drive. When you will keep the drive de-energized for long periods of time, remove the battery from the keypad. When the expected life of the battery is complete, replace the battery immediately.
A dead battery in the keypad can leak and cause damage to the keypad and drive.

The performance life estimate of a new battery is:

- Ambient temperature 20 °C (68 °F): 5 years
- Ambient temperature -10 °C to +50 °C (14 °F to 122 °F): 3.5 years

1. De-energize the drive and remove the keypad.
2. Use a slotted screwdriver or other tool to turn the battery cover counterclockwise and remove the cover.

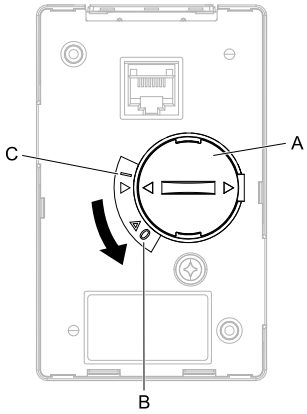

A - Battery cover **C - Closed**
B - Opened

Figure 8.63 Remove the Battery Cover

3. Remove the used battery from the keypad.
4. Insert the new battery.

Note:
- The battery cover side is the positive pole. Make sure that the polarity is correct when you put the battery in the keypad.
- Discard the used battery as specified by local regulations.

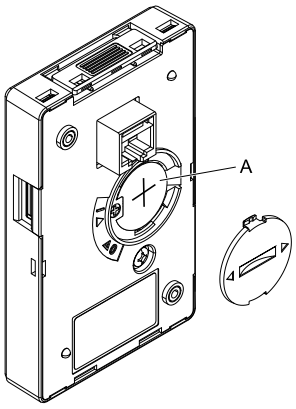

A - Battery

Figure 8.64 Insert the New Battery

5. Put the battery cover on the keypad and use a slotted screwdriver or other tool to turn the battery cover clockwise to close it.
6. Install the keypad on the drive.

8.7 Storage Guidelines

The chemicals in the electrolytic capacitors and other electronic parts of the drive change over time. When you store the drive for long periods of time, use the information in this section to help keep the performance life estimates.

◆ Storage Location

- Temperature and Humidity
  When you store the drive for approximately one month, for example during shipping, you can put the drive in a location where the temperature is -20 °C to +70 °C (-4 °F to +158 °F). Correctly package and store the drive during shipping to prevent vibration and impact damage.
  Do not put the drive in direct sunlight or where there will be condensation or ice. Put the drive in a location where the relative humidity is 95% or less.
- Dust and Oil Mist
  Do not keep the drive locations with dust or oil mist. For example, cement factories and cotton mills.
- Corrosive Gas
  Do not keep the drive in locations with corrosive gas. For example, chemical plants, refineries, and sewage plants.
- Salt Damage
  Do not keep the drive in salty locations. For example, locations near the ocean, and salt damage-designated locations.

Do not keep the drive in unsatisfactory locations. Keep all drives in storage rooms that are safe from unsatisfactory elements.

◆ Regular Application of Power

To prevent deterioration of the capacitors, Yaskawa recommends that you apply power to the drive a minimum of one time each year for a minimum of 30 minutes.

If you store the drive for longer than two years and do not apply power, Yaskawa recommends that you use a variable power source and gradually increase the power from 0 V to the rated drive voltage over a period of 2 to 3 minutes. Apply power for a minimum of 1 hour with no load to reform the main circuit electrolytic capacitor. When you operate the drive after you apply power, wire the drive correctly and check for drive faults, overcurrents, motor vibration, motor speed differences, and other defects during operation.

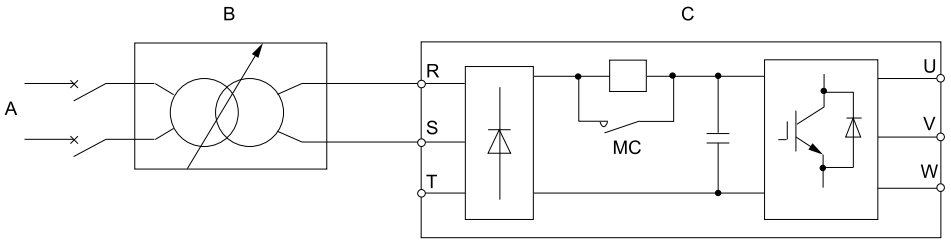

A - AC power supply
B - Variable power source
C - Drive

Figure 8.65 Power Distribution Method

9

Disposal

9.1 Section Safety 394
9.2 Disposal Instructions 395

9.1 Section Safety

⚠WARNING

Electrical Shock Hazard

De-energize the drive and wait 5 minutes minimum until the Charge LED turns off. Remove the front cover and terminal cover to do work on wiring, circuit boards, and other parts. Use terminals for their correct function only.

Incorrect wiring, incorrect ground connections, and incorrect repair of protective covers can cause death or serious injury.

Only let approved personnel install, wire, maintain, examine, replace parts, and repair the drive.

If personnel are not approved, it can cause serious injury or death.

Do not wear loose clothing or jewelry when you do work on the drive. Tighten loose clothing and remove all metal objects, for example watches or rings.

Loose clothing can catch on the drive and jewelry can conduct electricity and cause serious injury or death.

Fire Hazard

Handle keypad batteries properly. Do not charge the battery or disassemble the keypad.

If the battery explodes, it can cause a fire.

Do not disassemble batteries. Do not expose batteries to heat or fire.

If the battery explodes, it can cause a fire.

Crush Hazard

Wear eye protection when you do work on the drive.

If you do not use correct safety equipment, it can cause serious injury or death.

Only approved personnel can operate a crane or hoist to move the drive.

If unapproved personnel operate a crane or hoist, it can cause serious injury or death from falling equipment.

Use a crane or hoist to move large drives when necessary.

If you try to move a large drive without a crane or hoist, it can cause serious injury or death.

⚠CAUTION

Crush Hazard

Tighten terminal cover screws and hold the case safely when you move the drive.

If the drive or covers fall, it can cause moderate injury.

NOTICE

Damage to Equipment

The keypad battery stays in use after you de-energize the drive. When you will keep the drive de-energized for long periods of time, remove the battery from the keypad. When the expected life of the battery is complete, replace the battery immediately.

A dead battery in the keypad can leak and cause damage to the keypad and drive.

9.2 Disposal Instructions

Correctly discard the drive, packing material, battery, and microSD card as specified by regional, local, and municipal laws and regulations for this product.

Note:
- Remove the battery and microSD card from the keypad before you discard the drive.
- You cannot recycle the battery. Discard used batteries as specified by the battery manufacturer.
- Customers are responsible for microSD card data protection.
  PC functions that format and delete the data may not be sufficient to fully erase the microSD card data. Yaskawa recommends that customers physically destroy the microSD card in a shredder or use data wipe software to fully erase the card.

◆ WEEE Directive

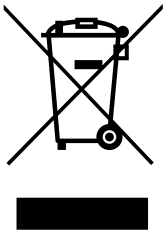

The wheelie bin symbol on this product, its manual, or its packaging identifies that you must recycle it at the end of its product life.

You must discard the product at an applicable collection point for electrical and electronic equipment (EEE). Do not discard the product with usual waste.

10

Specifications

10.1 Section Safety 398
10.2 Model Specifications (Three-Phase 200 V Class) 399
10.3 Model Specifications (Three-Phase 400 V Class) 401
10.4 Drive Specifications 403
10.5 Drive Derating 405
10.6 Drive Exterior and Mounting Dimensions 407
10.7 Peripheral Devices and Options 415

10.1 Section Safety

⚠DANGER

Do not ignore the safety messages in this manual.

If you ignore the safety messages in this manual, it will cause serious injury or death. The manufacturer is not responsible for injuries or damage to equipment.

10.2 Model Specifications (Three-Phase 200 V Class)

Table 10.1 Rating (200 V Class)

Model		2022	2031	2041	2059	2075	2094	2110
Maximum Applicable Motor Output (kW) *1		3.7	5.5	7.5	11.0	15.0	18.5	22.0
Maximum Applicable Motor Output (HP) *1		5.0	7.5	10.0	15.0	20.0	25.0	30.0
Input	Rated Input Current (AC) (A)	20.7	30.0	40.3	58.2	78.4	96.0	82.0
	Rated Input Current (DC) (A)	25.3	36.8	49.4	71.3	96.0	118.0	100.0
	50% ED Input Current (A)	25.5	37.1	49.9	72.1	97.2	119.1	101.8
Output	Rated Output Capacity (kVA) *2	6.7	9.5	12.6	17.9	22.9	28.6	33.5
	Continuous Rated Output Current (A)	15.3	21.9	28.9	41.1	52.5	65.6	77.0
	50% ED Output Current (A)	21.9	31.3	41.3	58.8	75.0	93.8	110.0
	Overload Tolerance	170% of the continuous rated output current for 10 seconds. **Note:** Derating can be necessary for applications that start and stop frequently.						
	Carrier Frequency *3	8 kHz without derating the drive capacity. Derate the drive capacity to use values to 15 kHz maximum.						
	Maximum Output Voltage	Three-phase 200 V to 240 V **Note:** The maximum output voltage is proportional to the input voltage.						
	Maximum Output Frequency	200 Hz						
Measures for Harmonics	DC Reactor	External options						Standard internal characteristics
Braking Device	Braking Transistor	Standard internal characteristics						
EMC Filter		No built-in EMC filter						
Power Supply	Rated Voltage, Rated Frequency	• Three-phase AC power supply 200 V to 240 V at 50/60 Hz • DC power supply 270 V to 340 V						
	Permitted Voltage Fluctuation	-15% to +10%						
	Permitted Frequency Fluctuation	±5%						
	Input Power (kVA)	8.6	12.5	16.8	24.2	32.6	39.9	34.1

*1 The maximum applicable motor output complies with 208 V motor ratings as specified in NEC Table 430.250. Select the drive capacity so that the load factor during constant speed operation is not higher than 80% of the 50% ED current of the drive.
*2 The rated output capacity is calculated with a rated output voltage of 208 V.
*3 Refer to *Carrier Frequency Settings and Rated Current Values on page 405* for more information about rated current values for each carrier frequency.

Table 10.2 Rating (200 V Class)

Model		2144	2181	2225	2269	2354	2432	2519
Maximum Applicable Motor Output (kW) *1		30.0	37.0	45.0	55.0	75.0	90.0	110.0
Maximum Applicable Motor Output (HP) *1		40.0	50.0	60.0	75.0	100.0	125.0	150.0
Input	Rated Input Current (AC) (A)	111.0	136.0	164.0	200.0	271.0	324.0	394.0
	Rated Input Current (DC) (A)	136.0	166.0	201.0	245.0	331.0	396.0	482.0
	50% ED Input Current (A)	137.6	168.8	204.3	248.5	336.8	402.7	490.4

Model		2144	2181	2225	2269	2354	2432	2519
Output	Rated Output Capacity (kVA) *2	43.8	55.3	68.6	81.9	108.0	132.0	158.0
	Continuous Rated Output Current (A)	100.6	126.9	157.5	188.1	247.6	302.4	363.2
	50% ED Output Current (A)	143.8	181.3	225.0	268.8	353.8	432.0	518.8
	Overload Tolerance	170% of the continuous rated output current for 10 seconds. **Note:** Derating can be necessary for applications that start and stop frequently.						
	Carrier Frequency *3	8 kHz without derating the drive capacity. Derate the drive capacity to use values to 15 kHz maximum.						
	Maximum Output Voltage	Three-phase 200 V to 240 V **Note:** The maximum output voltage is proportional to the input voltage.						
	Maximum Output Frequency	200 Hz						
Measures for Harmonics	DC Reactor	Standard internal characteristics						
Braking Device	Braking Transistor	Standard internal characteristics					External options	
EMC Filter		No built-in EMC filter						
Power Supply	Rated Voltage, Rated Frequency	• Three-phase AC power supply 200 V to 240 V at 50/60 Hz • DC power supply 270 V to 340 V						
	Permitted Voltage Fluctuation	-15% to +10%						
	Permitted Frequency Fluctuation	±5%						
	Input Power (kVA)	46.1	56.5	68.2	83.1	113	135	164

*1 The maximum applicable motor output complies with 208 V motor ratings as specified in NEC Table 430.250. Select the drive capacity so that the load factor during constant speed operation is not higher than 80% of the 50% ED current of the drive.
*2 The rated output capacity is calculated with a rated output voltage of 208 V.
*3 Refer to *Carrier Frequency Settings and Rated Current Values on page 405* for more information about rated current values for each carrier frequency.

10.3 Model Specifications (Three-Phase 400 V Class)

Table 10.3 Rating (400 V Class)

Model		4012	4019	4023	4030	4039	4049	4056	4075
Maximum Applicable Motor Output (kW) *1		3.7	5.5	7.5	11.0	15.0	18.5	22.0	30.0
Maximum Applicable Motor Output (HP) *1		5.0	7.5	10.0	15.0	20.0	25.0	30.0	40.0
Input	Rated Input Current (AC) (A)	10.3	13.9	18.7	26.9	36.3	44.4	37.9	51.2
	Rated Input Current (DC) (A)	9.9	14.0	18.2	25.8	34.4	42.3	46.5	62.7
	50% ED Input Current (A)	14.4	19.5	26.3	38.0	51.2	51.2	62.7	72.4
Output	Rated Output Capacity (kVA) *2	6.1	10.0	12.0	16.0	20.0	26.0	30.0	39.0
	Continuous Rated Output Current (A)	8.1	13.0	15.8	21.0	27.1	34.1	39.4	52.5
	50% ED Output Current (A)	11.5	18.5	22.5	30.0	38.8	48.8	56.3	75.0
	Overload Tolerance	170% of the continuous rated output current for 10 seconds. **Note:** Derating can be necessary for applications that start and stop frequently.							
	Carrier Frequency *3	8 kHz without derating the drive capacity. Derate the drive capacity to use values to 15 kHz maximum.							
	Maximum Output Voltage	Three-phase 380 V to 480 V **Note:** The maximum output voltage is proportional to the input voltage.							
	Maximum Output Frequency	200 Hz							
Measures for Harmonics	DC Reactor	External options							
Braking Device	Braking Transistor	Standard internal characteristics							
EMC Filter	EMC Filter IEC 61800-3, C2	Factory option Models 4xxxC: There is a category C2 EMC filter in the drive.							No built-in EMC filter
Power Supply	Rated Voltage, Rated Frequency	• Three-phase AC power supply 380 V to 480 V at 50/60 Hz • DC power supply 513 V to 679 V							
	Permitted Voltage Fluctuation	-15% to +10%							
	Permitted Frequency Fluctuation	±5%							
	Input Power (kVA)	9.3	13	17	24	33	40	34	46

*1 The maximum applicable motor output complies with 380 V motor ratings as specified in Annex G of IEC 60947-4-1. Select the drive capacity so that the load factor during constant speed operation is not higher than 80% of the 50% ED current of the drive.
*2 The rated output capacity is calculated with a rated output voltage of 380 V.
*3 Refer to *Carrier Frequency Settings and Rated Current Values on page 405* for more information about rated current values for each carrier frequency.

Table 10.4 Rating (400 V Class)

Model	4094	4114	4140	4188	4225	4270	4325	4380
Maximum Applicable Motor Output (kW) *1	37.0	45.0	55.0	75.0	90.0	110.0	132.0	160.0
Maximum Applicable Motor Output (HP) *1	50.0	60.0	75.0	100.0	125.0	150.0	175.0	200.0

Model		4094	4114	4140	4188	4225	4270	4325	4380
Input	Rated Input Current (AC) (A)	62.8	75.9	92.3	125.0	149.4	181.9	217.5	262.7
	Rated Input Current (DC) (A)	77.1	93.3	113.6	153.5	183.6	223.1	267.0	321.4
	50% ED Input Current (A)	88.8	107.5	130.8	177.2	211.9	258.1	308.8	373.1
Output	Rated Output Capacity (kVA) *2	49.0	60.0	74.0	99.0	118.0	142.0	171.0	200.0
	Continuous Rated Output Current (A)	65.6	79.6	98.0	131.3	157.5	189.0	227.5	266.0
	50% ED Output Current (A)	93.8	113.8	140.0	187.5	225.0	270.0	325.0	380.0
	Overload Tolerance	170% of the continuous rated output current for 10 seconds. **Note:** Derating can be necessary for applications that start and stop frequently.							
	Carrier Frequency *3	8 kHz without derating the drive capacity. Derate the drive capacity to use values to 15 kHz maximum.							
	Maximum Output Voltage	Three-phase 380 V to 480 V **Note:** The maximum output voltage is proportional to the input voltage.							
	Maximum Output Frequency	200 Hz							
Measures for Harmonics	DC Reactor	External options							
Braking Device	Braking Transistor	Standard internal characteristics							
EMC Filter		No built-in EMC filter							
Power Supply	Rated Voltage, Rated Frequency	• Three-phase AC power supply 380 V to 480 V at 50/60 Hz • DC power supply 513 V to 679 V							
	Permitted Voltage Fluctuation	-15% to +10%							
	Permitted Frequency Fluctuation	±5%							
	Input Power (kVA)	57	69	84	113	135	165	198	239

*1 The maximum applicable motor output complies with 380 V motor ratings as specified in Annex G of IEC 60947-4-1. Select the drive capacity so that the load factor during constant speed operation is not higher than 80% of the 50% ED current of the drive.
*2 The rated output capacity is calculated with a rated output voltage of 380 V.
*3 Refer to *Carrier Frequency Settings and Rated Current Values on page 405* for more information about rated current values for each carrier frequency.

10.4 Drive Specifications

Note:
- To get the OLV and CLV specifications, do Rotational Auto-Tuning.
- To get the longest product life, install the drive in an environment that meets the necessary specifications.

Table 10.5 Control Characteristics

Item	Specification
Control Methods	• V/f Control • Open Loop Vector • Closed Loop Vector • PM Closed Loop Vector
Frequency Control Range	0.01 Hz to 200 Hz
Frequency Accuracy (Temperature Fluctuation)	Digital inputs: ±0.01% of the maximum output frequency (-10 °C to +40 °C (14 °F to 104 °F)) Analog inputs: ±0.1% of the maximum output frequency (25 °C ±10 °C (77 °F ±18 °F))
Frequency Setting Resolution	Digital inputs: 0.01 Hz Analog inputs: 1/2048 of the maximum output frequency (11-bit signed)
Output Speed Resolution	0.001 Hz
Frequency Setting Signal	Main speed reference: -10 Vdc to +10 Vdc (20 kΩ), 0 Vdc to 10 Vdc (20 kΩ), 4 mA to 20 mA (250 Ω), 0 mA to 20 mA (250 Ω)
Starting Torque	• V/f: 150%/3 Hz • OLV: 200%/0.3 Hz • CLV: 200%/0 min^{-1} (r/min) • CLV/PM: 200%/0 min^{-1} (r/min) **Note:** Correctly select the drive and motor capacity for this starting torque in these control methods: • OLV • CLV • CLV/PM
Speed Control Range	• V/f: 1:40 • OLV: 1:200 • CLV: 1:1500 • CLV/PM: 1:1500
Zero Speed Control	Possible in these control methods: • CLV • CLV/PM
Torque Limits	You can use parameter settings for different limits in four quadrants in these control methods: • OLV • CLV • CLV/PM
Acceleration and Deceleration Ramps	0.0 s to 6000.0 s The drive can set four pairs of different acceleration and deceleration ramps.
Braking Torque	Approximately 125% with a dynamic braking option
V/f Characteristics	User-set V/f pattern
Main Control Functions	Droop Control, Feed Forward Control, Position Lock at Start and Stop/Anti-Rollback Function, Overtorque/Undertorque Detection, Torque Limit, 8 Step Speed (maximum), Accel/Decel Switch, 5 Zone Jerk Settings, Auto-Tuning (Rotational, Stationary, and Encoder Offset Tuning), Dwell Function, Cooling Fan ON/OFF Switch, Slip Compensation, Torque Compensation, DC Injection Braking at Start and Stop, Energy Saving Control, MEMOBUS/Modbus Communication (RS-485 max, 115.2 kbps), Automatic Fault Reset, Parameter Backup Function, Online Tuning, High Frequency Injection, Short Floor, Rescue Operation (Light Load Direction Search Function), Inspection Operation, Brake Sequence, Brake Torque Check Function, Speed related parameters with elevator units display, etc.

Table 10.6 Protection Functions

Item	Specification
Motor Protection	Electronic thermal overload protection
Momentary Overcurrent Protection	Drive stops when the output current is more than 200% of the continuous rated output current.
Overload Protection	Drive stops when the output current is more than 170% of the continuous rated output current for 10 seconds. The permitted frequency of overload is one time each 10 minutes. **Note:** If output speed < 6 Hz, the drive can trigger the overload protection function when the output current is in the overload tolerance range.
Overvoltage Protection	200 V Class: Stops when the DC bus voltage is more than approximately 410 V 400 V Class: Stops when the DC bus voltage is more than approximately 820 V

Item	Specification
Undervoltage Protection	200 V Class: Stops when the DC bus voltage decreases to less than approximately 190 V 400 V Class: Stops when the DC bus voltage decreases to less than approximately 380 V
Heatsink Overheat Protection	The drive stops when the thermistor detects an IGBT temperature more than approximately 100 °C (212 °F). The trip temperature level is different for different drive models.
Braking Resistor Overheat Protection	Overheat detection for braking resistor (optional ERF-type, 3% ED)
Stall Prevention	Stall prevention is available during acceleration, deceleration, and during run.
Ground Fault Protection	Electronic circuit protection **Note:** This protection detects ground faults during run. The drive will not provide protection when: • There is a low-resistance ground fault for the motor cable or terminal block • You energize the drive when there is a ground fault.
DC Bus Charge LED	Charge LED illuminates when DC bus voltage is more than 50 V.

Table 10.7 Environment

Item	Specification
Area of Use	Indoors
Power Supply	Overvoltage Category III
Surrounding Air Temperature	IP20/UL Open Type: -10 °C to +50 °C (14 °F to 122 °F) • When you install the drive in an enclosure, use a cooling fan or air conditioner to keep the internal air temperature in the permitted range. • Do not let the drive freeze.
Humidity	95% RH or less Do not let condensation form on the drive.
Storage Temperature	-20 °C to +70 °C (-4 °F to +158 °F) (short-term temperature during transportation)
Surrounding Area	Pollution degree 2 or less Install the drive in an area without: • Oil mist, corrosive or flammable gas, or dust • Metal powder, oil, water, or other unwanted materials • Radioactive materials or flammable materials, including wood • Harmful gas or fluids • Salt • Direct sunlight
Altitude	1000 m (3281 ft) maximum **Note:** Derate the output current by 1% for each 100 m (328 ft) to install the drive in altitudes between 1000 m to 4000 m (3281 ft to 13123 ft). It is not necessary to derate the rated voltage in these conditions: • When you install the drive at 2000 m (6562 ft) or lower • When you install the drive between 2000 m to 4000 m (6562 ft to 13123 ft) and ground the neutral point on the power supply. Contact Yaskawa or your nearest sales representative if you will not ground the neutral point.
Vibration *1	• 10 Hz to 20 Hz: 1 G (9.8 m/s^2, 32.15 ft/s^2) • 20 Hz to 55 Hz: – 2022 to 2225, 4012 to 4188: 0.6 G (5.9 m/s^2, 19.36 ft/s^2) – 2269 to 2519, 4225 to 4380: 0.2 G (2.0 m/s^2, 6.56 ft/s^2)
Installation Orientation	Install the drive vertically for sufficient airflow to cool the drive.

*1 This drive passed the vibration test with a logarithmic sweep as specified by EN 60068-2-6 and JIS C60068-2-6. If the internal components of the drive vibrate too much, it can cause damage to the drive even when the vibration frequency is in the specification. If the drive components vibrate, improve the installation environment to decrease vibration.

- Put the motor on a rubber pad to decrease vibration.
- Reinforce the structure of the installation.

Table 10.8 Standard

Item	Specification
Harmonized Standard	• UL 61800-5-1 • EN 61800-3 • IEC/EN 61800-5-1 • Two Safe Disable inputs and one EDM output according to EN ISO 13849-1:2015 (PL e (Cat.III)), IEC/EN 61508 SIL3
Enclosure Protection Design	IP20/UL Open Type

10.5 Drive Derating

You must derate the drive capacity to operate the drive above the rated temperature, altitude, and default carrier frequency.

◆ Carrier Frequency Settings and Rated Current Values

Table 10.9 and Table 10.10 shows how the continuous rated output current of the drive changes when the *C6-03 [Carrier Frequency]* value changes.

The output current value changes linearly as the carrier frequency changes. You can use the values from the tables to calculate a frequency that is not shown.

Note:

The drive only applies the carrier frequency derating of the output current to the reference output current value of *oL2 [Drive Overload]*. The drive will not derate the 100% output rated current of parameters and monitors as specified in the output rated current shown in *Model Specifications (Three-Phase 200 V Class) on page 399* and *Model Specifications (Three-Phase 400 V Class) on page 401*.

■ Three-Phase 200 V Class

Table 10.9 Carrier Frequency and Rated Current Derating

Model	Continuous Rated Output Current (A)						50% ED Current (A)					
	2 kHz	5 kHz	8 kHz	10 kHz	12.5 kHz	15 kHz	2 kHz	5 kHz	8 kHz	10 kHz	12.5 kHz	15 kHz
2022	15.3	15.3	15.3	14.1	12.5	11.0	21.9	21.9	21.9	20.1	17.9	15.7
2031	21.9	21.9	21.9	20.1	17.9	15.8	31.3	31.3	31.3	28.8	25.6	22.5
2041	28.9	28.9	28.9	25.7	21.7	17.7	41.3	41.3	41.3	36.7	30.9	25.2
2059	41.1	41.1	41.1	38.0	34.0	30.1	58.8	58.8	58.8	54.3	48.6	43.0
2075	52.5	52.5	52.5	49.0	44.6	40.3	75.0	75.0	75.0	70.0	63.8	57.5
2094	65.6	65.6	65.6	60.0	53.0	45.9	93.8	93.8	93.8	85.7	75.7	65.6
2110	77.0	77.0	77.0	67.8	59.9	51.9	110.0	110.0	110.0	96.9	85.6	74.2
2144	100.6	100.6	100.6	92.0	81.2	70.4	143.8	143.8	143.8	131.4	116.0	100.6
2181	126.9	126.9	109.5	98.0	-	-	181.3	181.3	156.5	140.0	-	-
2225	157.5	157.5	135.7	121.2	-	-	225.0	225.0	193.9	173.2	-	-
2269	188.1	188.1	161.7	144.1	-	-	268.8	268.8	231.0	205.8	-	-
2354	247.6	247.6	217.9	198.1	-	-	353.8	353.8	311.3	283.0	-	-
2432	302.4	302.4	257.2	227.1	-	-	432.0	432.0	367.4	324.4	-	-
2519	363.2	363.2	319.6	290.5	-	-	518.8	518.8	456.5	415.0	-	-

■ Three-Phase 400 V Class

Table 10.10 Carrier Frequency and Rated Current Derating

Model	Continuous Rated Output Current (A)						50% ED Current (A)					
	2 kHz	5 kHz	8 kHz	10 kHz	12.5 kHz	15 kHz	2 kHz	5 kHz	8 kHz	10 kHz	12.5 kHz	15 kHz
4012	8.1	8.1	8.1	7.1	5.9	4.7	11.5	11.5	11.5	10.1	8.4	6.7
4019	13.0	13.0	13.0	13.0	11.2	9.5	18.5	18.5	18.5	18.5	16.0	13.5
4023	15.8	15.8	15.8	15.8	14.1	12.4	22.5	22.5	22.5	22.5	20.1	17.7
4030	21.0	21.0	21.0	21.0	18.6	16.2	30.0	30.0	30.0	30.0	26.6	23.2
4039	27.1	27.1	27.1	24.0	20.1	16.3	38.8	38.8	38.8	34.3	28.8	23.2
4049	34.1	34.1	34.1	30.8	27.1	23.4	48.8	48.8	48.8	44.0	38.7	33.4
4056	39.4	39.4	39.4	35.5	31.2	26.8	56.3	56.3	56.3	50.7	44.5	38.3
4075	52.5	52.5	52.5	46.5	39.0	31.5	75.0	75.0	75.0	66.4	55.7	45.0
4094	65.6	65.6	54.3	46.8	37.5	28.1	93.8	93.8	77.6	66.9	53.5	40.1
4114	79.6	79.6	69.1	62.1	53.3	44.6	113.8	113.8	98.7	88.7	76.2	63.7
4140	98.0	98.0	80.4	68.6	-	-	140.0	140.0	114.8	98.0	-	-
4188	131.3	131.3	107.6	91.9	-	-	187.5	187.5	153.8	131.3	-	-

Model	Continuous Rated Output Current (A)						50% ED Current (A)					
	2 kHz	5 kHz	8 kHz	10 kHz	12.5 kHz	15 kHz	2 kHz	5 kHz	8 kHz	10 kHz	12.5 kHz	15 kHz
4225	157.5	157.5	129.2	110.3	-	-	225.0	225.0	184.5	157.5	-	-
4270	189.0	189.0	155.0	132.3	-	-	270.0	270.0	221.4	189.0	-	-
4325	227.5	227.5	186.6	159.3	-	-	325.0	325.0	266.5	227.5	-	-
4380	266.0	266.0	218.1	186.2	-	-	380.0	380.0	311.6	266.0	-	-

◆ Altitude Derating

Install the drive in a location that has an altitude of 1000 m (3281 ft) or lower.

Derate the output current by 1% for each 100 m (328 ft) to install the drive in altitudes between 1000 m to 4000 m (3281 ft to 13123 ft).

It is not necessary to derate the rated voltage in these conditions:

- Installing the drive at 2000 m (6562 ft) or lower
- Installing the drive between 2000 m to 4000 m (6562 ft to 13123 ft) and grounding the neutral point on the power supply.
  If you do not ground the drive with a neutral network, contact Yaskawa or your nearest sales representative.

10.6 Drive Exterior and Mounting Dimensions

◆ IP20/UL Open Type

■ 2022 - 2041, 4012 - 4023

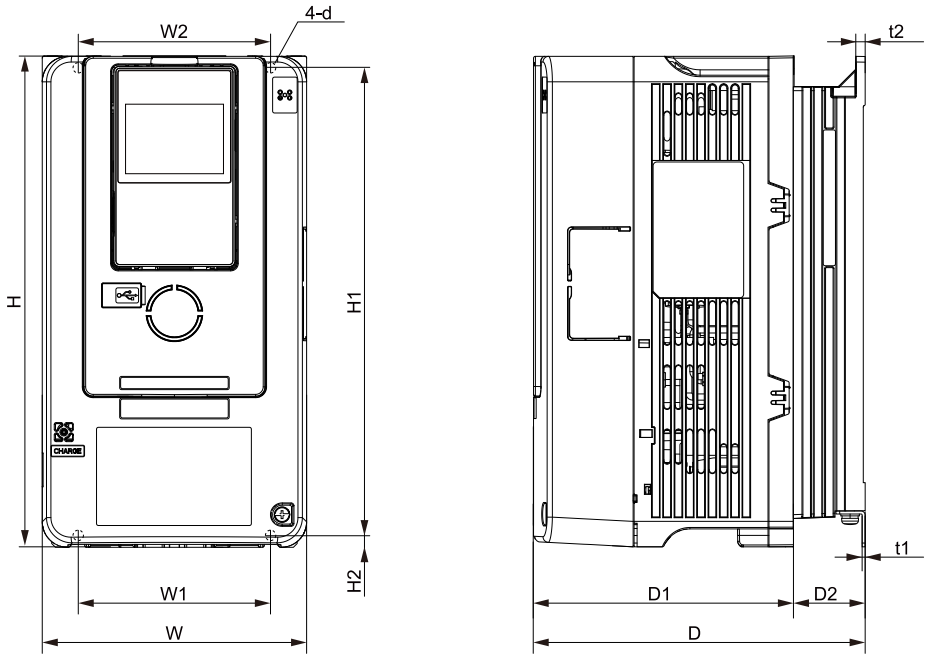

Figure 10.1 Dimension Diagram 1

Table 10.11 Three-Phase 200 V Class (IP20/UL Open Type)

Model	Dimensions mm (in)												Est. Weight kg (lb)
	W	H	D	D1	D2	W1	W2	H1	H2	t1	t2	d	
2022	140 (5.51)	260 (10.24)	211 (8.31)	138 (5.43)	73 (2.87)	102 (4.02)	102 (4.02)	248 (9.76)	6 (0.24)	1.6 (0.06)	5 (0.20)	M5	3.8 (8.38)
2031	140 (5.51)	260 (10.24)	211 (8.31)	138 (5.43)	73 (2.87)	102 (4.02)	102 (4.02)	248 (9.76)	6 (0.24)	1.6 (0.06)	5 (0.20)	M5	4.2 (9.26)
2041	140 (5.51)	260 (10.24)	211 (8.31)	138 (5.43)	73 (2.87)	102 (4.02)	102 (4.02)	248 (9.76)	6 (0.24)	1.6 (0.06)	5 (0.20)	M5	4.2 (9.26)

Table 10.12 Three-Phase 400 V Class (IP20/UL Open Type)

Model	Dimensions mm (in)												Est. Weight kg (lb)
	W	H	D	D1	D2	W1	W2	H1	H2	t1	t2	d	
4012	140 (5.51)	260 (10.24)	211 (8.31)	138 (5.43)	73 (2.87)	102 (4.02)	102 (4.02)	248 (9.76)	6 (0.24)	1.6 (0.06)	5 (0.20)	M5	3.9 (8.60)
4019	140 (5.51)	260 (10.24)	211 (8.31)	138 (5.43)	73 (2.87)	102 (4.02)	102 (4.02)	248 (9.76)	6 (0.24)	1.6 (0.06)	5 (0.20)	M5	4.1 (9.04)
4023	140 (5.51)	260 (10.24)	211 (8.31)	138 (5.43)	73 (2.87)	102 (4.02)	102 (4.02)	248 (9.76)	6 (0.24)	1.6 (0.06)	5 (0.20)	M5	4.1 (9.04)

■ 2059, 4030, 4039

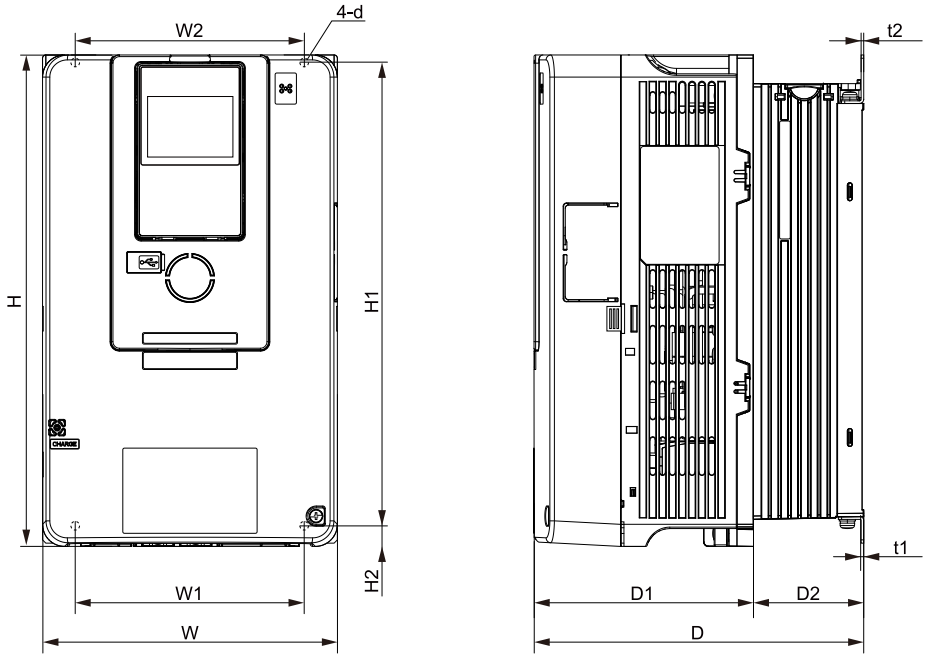

Figure 10.2 Dimension Diagram 2

Table 10.13 Three-Phase 200 V Class (IP20/UL Open Type)

Model	Dimensions mm (in)												Est. Weight kg (lb)
	W	H	D	D1	D2	W1	W2	H1	H2	t1	t2	d	
2059	180 (7.09)	300 (11.81)	202 (7.95)	134 (5.28)	68 (2.68)	140 (5.51)	140 (5.51)	284 (11.18)	8 (0.32)	1.6 (0.06)	1.6 (0.06)	M5	6.0 (13.23)

Table 10.14 Three-Phase 400 V Class (IP20/UL Open Type)

Model	Dimensions mm (in)												Est. Weight kg (lb)
	W	H	D	D1	D2	W1	W2	H1	H2	t1	t2	d	
4030	180 (7.09)	300 (11.81)	202 (7.95)	134 (5.28)	68 (2.68)	140 (5.51)	140 (5.51)	284 (11.18)	8 (0.32)	1.6 (0.06)	1.6 (0.06)	M5	5.5 (12.13)
4039	180 (7.09)	300 (11.81)	202 (7.95)	134 (5.28)	68 (2.68)	140 (5.51)	140 (5.51)	284 (11.18)	8 (0.32)	1.6 (0.06)	1.6 (0.06)	M5	6.0 (13.23)

■ 2075, 2094, 4049, 4056

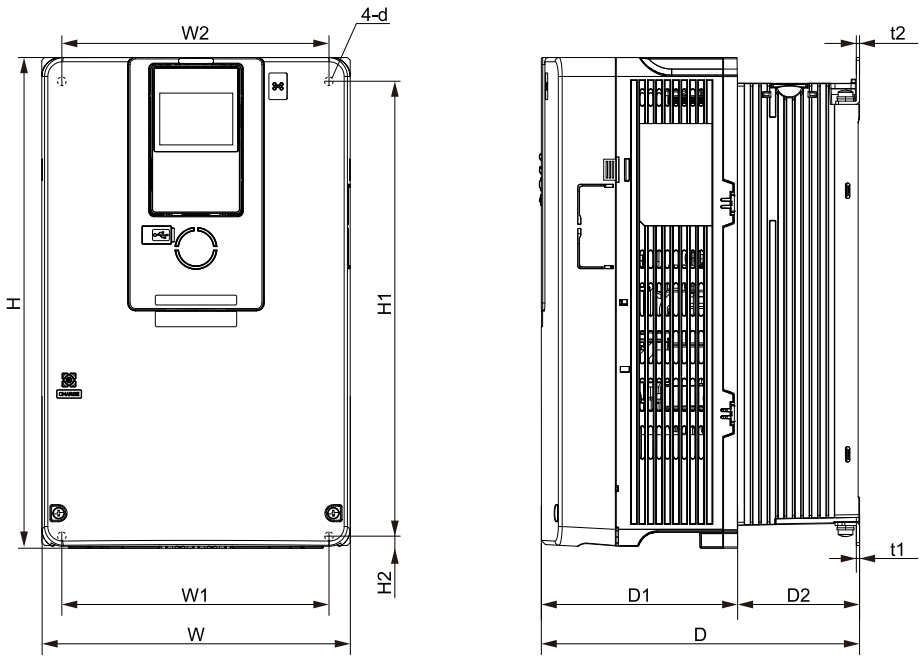

Figure 10.3 Dimension Diagram 3

Table 10.15 Three-Phase 200 V Class (IP20/UL Open Type)

Model	Dimensions mm (in)												Est. Weight kg (lb)
	W	H	D	D1	D2	W1	W2	H1	H2	t1	t2	d	
2075	220 (8.66)	350 (13.78)	227 (8.94)	140 (5.51)	87 (3.43)	192 (7.56)	192 (7.56)	335 (13.19)	8 (0.32)	2.3 (0.09)	2.3 (0.09)	M6	8.5 (18.74)
2094	220 (8.66)	350 (13.78)	227 (8.94)	140 (5.51)	87 (3.43)	192 (7.56)	192 (7.56)	335 (13.19)	8 (0.32)	2.3 (0.09)	2.3 (0.09)	M6	9.5 (20.95)

Table 10.16 Three-Phase 400 V Class (IP20/UL Open Type)

Model	Dimensions mm (in)												Est. Weight kg (lb)
	W	H	D	D1	D2	W1	W2	H1	H2	t1	t2	d	
4049	220 (8.66)	350 (13.78)	227 (8.94)	140 (5.51)	87 (3.43)	192 (7.56)	192 (7.56)	335 (13.19)	8 (0.32)	2.3 (0.09)	2.3 (0.09)	M6	8.5 (18.74)
4056	220 (8.66)	350 (13.78)	246 (9.69)	140 (5.51)	106 (4.17)	192 (7.56)	192 (7.56)	335 (13.19)	8 (0.32)	2.3 (0.09)	2.3 (0.09)	M6	13 (28.67)

■ 2110, 4075

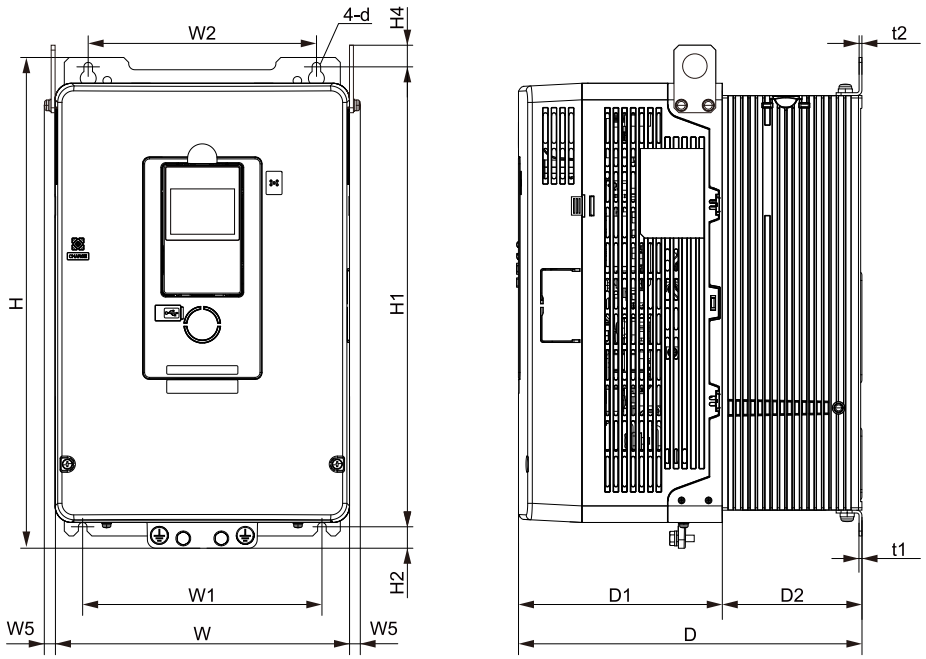

Figure 10.4 Dimension Diagram 4

Table 10.17 Three-Phase 200 V Class (IP20/UL Open Type)

Model	Dimensions mm (in)														Est. Weight kg (lb)
	W	H	D	D1	D2	W1	W2	W5 (Maximum)	H1	H2	H4	t1	t2	d	
2110	240 (9.45)	400 (15.75)	280 (11.02)	166 (6.54)	114 (4.49)	195 (7.68)	186 (7.32)	12 (0.47)	375 (14.76)	17.5 (0.69)	17.5 (0.69)	2.3 (0.09)	2.3 (0.09)	M6	18 (39.69)

Table 10.18 Three-Phase 400 V Class (IP20/UL Open Type)

Model	Dimensions mm (in)														Est. Weight kg (lb)
	W	H	D	D1	D2	W1	W2	W5 (Maximum)	H1	H2	H4	t1	t2	d	
4075	240 (9.45)	400 (15.75)	280 (11.02)	166 (6.54)	114 (4.49)	195 (7.68)	186 (7.32)	12 (0.47)	375 (14.76)	17.5 (0.69)	17.5 (0.69)	2.3 (0.09)	2.3 (0.09)	M6	15 (33.07)

■ 2144, 4094, 4114

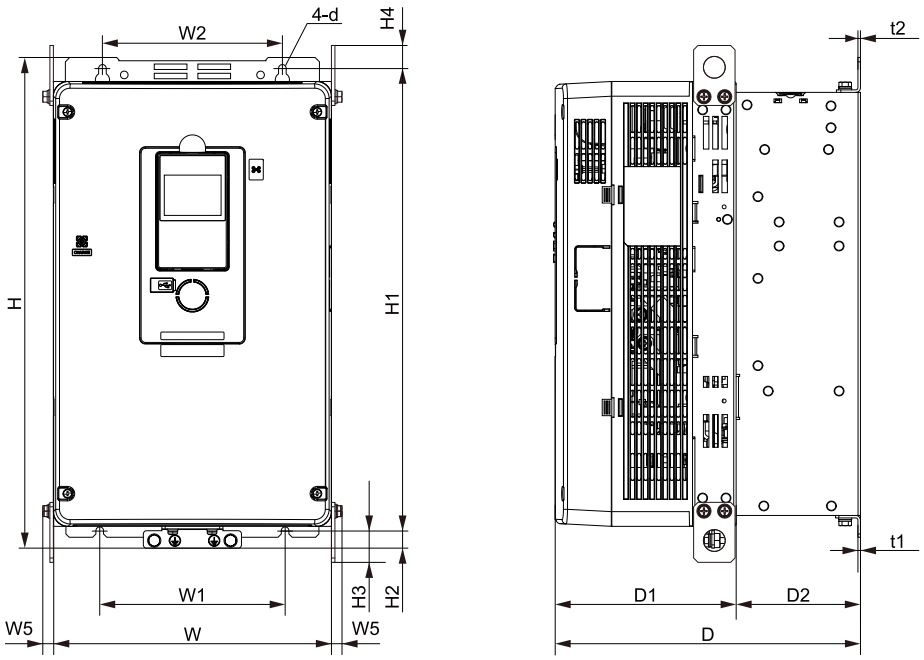

Figure 10.5 Dimension Diagram 5

Table 10.19 Three-Phase 200 V Class (IP20/UL Open Type)

Model	Dimensions mm (in)															Est. Weight kg (lb)
	W	H	D	D1	D2	W1	W2	W5 (Maximum)	H1	H2	H3	H4	t1	t2	d	
2144	255 (10.04)	450 (17.72)	280 (11.02)	166 (6.54)	114 (4.49)	170 (6.69)	165 (6.50)	12 (0.47)	424 (16.69)	16 (0.63)	29 (1.14)	21 (0.83)	2.3 (0.09)	2.3 (0.09)	M6	22 (48.51)

Table 10.20 Three-Phase 400 V Class (IP20/UL Open Type)

Model	Dimensions mm (in)															Est. Weight kg (lb)
	W	H	D	D1	D2	W1	W2	W5 (Maximum)	H1	H2	H3	H4	t1	t2	d	
4094	255 (10.04)	450 (17.72)	280 (11.02)	166 (6.54)	114 (4.49)	170 (6.69)	165 (6.50)	12 (0.47)	424 (16.69)	16 (0.63)	29 (1.14)	21 (0.83)	2.3 (0.09)	2.3 (0.09)	M6	20 (44.10)
4114	255 (10.04)	450 (17.72)	280 (11.02)	166 (6.54)	114 (4.49)	170 (6.69)	165 (6.50)	12 (0.47)	424 (16.69)	16 (0.63)	29 (1.14)	21 (0.83)	2.3 (0.09)	2.3 (0.09)	M6	25 (55.12)

■ 2181, 2225, 4140, 4188

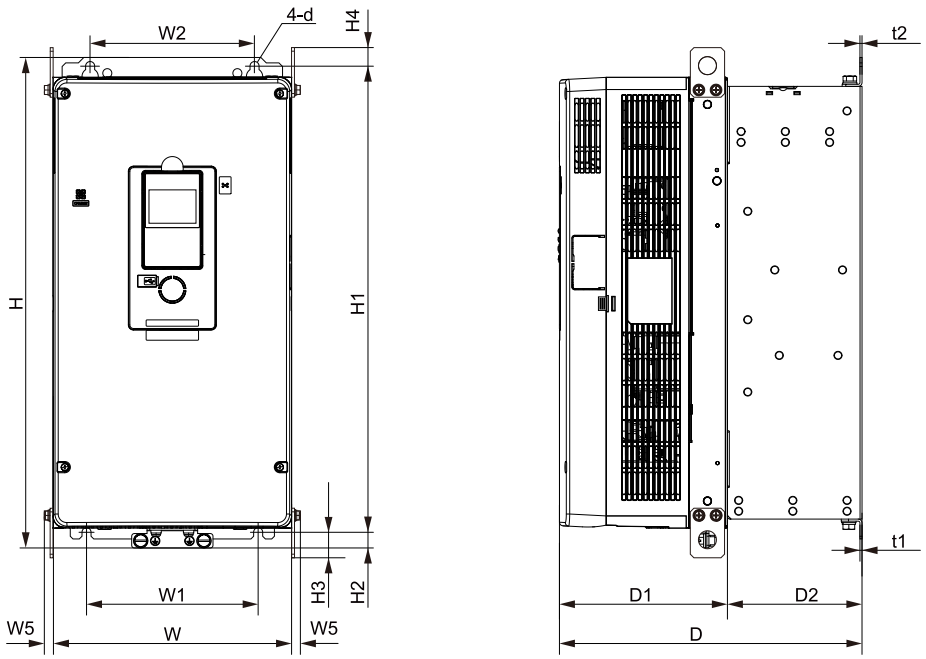

Figure 10.6 Dimension Diagram 6

Table 10.21 Three-Phase 200 V Class (IP20/UL Open Type)

Model	Dimensions mm (in)															Est. Weight kg (lb)
	W	H	D	D1	D2	W1	W2	W5 (Maximum)	H1	H2	H3	H4	t1	t2	d	
2181	264 (10.39)	543 (21.38)	335 (13.19)	186 (7.32)	149 (5.87)	190 (7.48)	182 (7.17)	12 (0.47)	516 (20.31)	17.5 (0.69)	28.5 (1.12)	20.5 (0.81)	2.3 (0.09)	2.3 (0.09)	M8	34 (74.96)
2225	264 (10.39)	543 (21.38)	335 (13.19)	186 (7.32)	149 (5.87)	190 (7.48)	182 (7.17)	12 (0.47)	516 (20.31)	17.5 (0.69)	28.5 (1.12)	20.5 (0.81)	2.3 (0.09)	2.3 (0.09)	M8	35 (77.17)

Table 10.22 Three-Phase 400 V Class (IP20/UL Open Type)

Model	Dimensions mm (in)															Est. Weight kg (lb)
	W	H	D	D1	D2	W1	W2	W5 (Maximum)	H1	H2	H3	H4	t1	t2	d	
4140	264 (10.39)	543 (21.38)	335 (13.19)	186 (7.32)	149 (5.87)	190 (7.48)	182 (7.17)	12 (0.47)	516 (20.31)	17.5 (0.69)	28.5 (1.12)	20.5 (0.81)	2.3 (0.09)	2.3 (0.09)	M8	37 (81.58)
4188	264 (10.39)	543 (21.38)	335 (13.19)	186 (7.32)	149 (5.87)	190 (7.48)	182 (7.17)	12 (0.47)	516 (20.31)	17.5 (0.69)	28.5 (1.12)	20.5 (0.81)	2.3 (0.09)	2.3 (0.09)	M8	38 (83.78)

■ 2269, 2354, 4225 to 4325

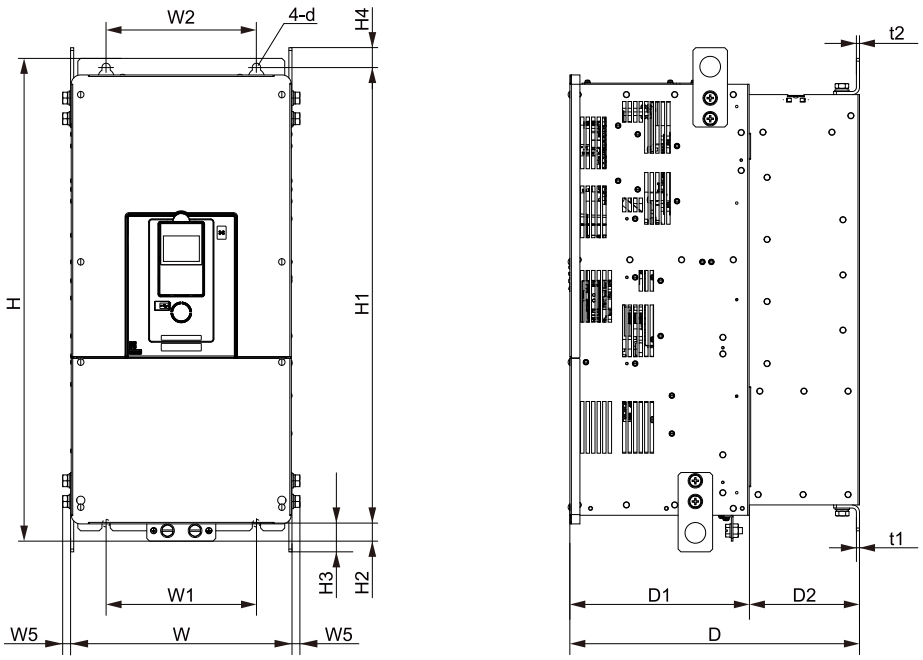

Figure 10.7 Dimension Diagram 7

Table 10.23 Three-Phase 200 V Class (IP20/UL Open Type)

Model	Dimensions mm (in)															Est. Weight kg (lb)
	W	H	D	D1	D2	W1	W2	W5 (Maximum)	H1	H2	H3	H4	t1	t2	d	
2269	312 (12.28)	700 (27.56)	420 (16.54)	260 (10.24)	160 (6.30)	218 (8.58)	218 (8.58)	18 (0.71)	659 (25.94)	28 (1.10)	43.5 (1.71)	28.5 (1.12)	4.5 (0.18)	4.5 (0.18)	M10	59 (130.08)
2354	312 (12.28)	700 (27.56)	420 (16.54)	260 (10.24)	160 (6.30)	218 (8.58)	218 (8.58)	18 (0.71)	659 (25.94)	28 (1.10)	43.5 (1.71)	28.5 (1.12)	4.5 (0.18)	4.5 (0.18)	M10	62 (136.69)

Table 10.24 Three-Phase 400 V Class (IP20/UL Open Type)

Model	Dimensions mm (in)															Est. Weight kg (lb)
	W	H	D	D1	D2	W1	W2	W5 (Maximum)	H1	H2	H3	H4	t1	t2	d	
4225	312 (12.28)	700 (27.56)	420 (16.54)	260 (10.24)	160 (6.30)	218 (8.58)	218 (8.58)	18 (0.71)	659 (25.94)	28 (1.10)	43.5 (1.71)	28.5 (1.12)	4.5 (0.18)	4.5 (0.18)	M10	61 (134.49)
4270	312 (12.28)	700 (27.56)	420 (16.54)	260 (10.24)	160 (6.30)	218 (8.58)	218 (8.58)	18 (0.71)	659 (25.94)	28 (1.10)	43.5 (1.71)	28.5 (1.12)	4.5 (0.18)	4.5 (0.18)	M10	63 (138.90)
4325	312 (12.28)	700 (27.56)	420 (16.54)	260 (10.24)	160 (6.30)	218 (8.58)	218 (8.58)	18 (0.71)	659 (25.94)	28 (1.10)	43.5 (1.71)	28.5 (1.12)	4.5 (0.18)	4.5 (0.18)	M10	66 (145.51)

■ 2432, 2519, 4380

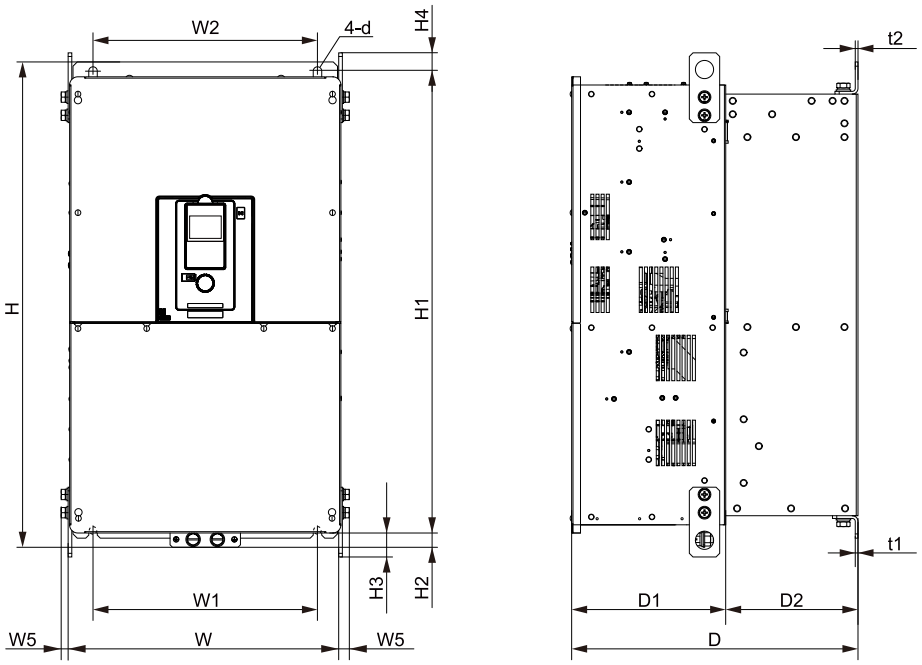

Figure 10.8 Dimension Diagram 8

Table 10.25 Three-Phase 200 V Class (IP20/UL Open Type)

Model	Dimensions mm (in)															Est. Weight kg (lb)
	W	H	D	D1	D2	W1	W2	W5 (Maximum)	H1	H2	H3	H4	t1	t2	d	
2432	440 (17.32)	800 (31.50)	472 (18.58)	254 (10.00)	218 (8.58)	370 (14.57)	370 (14.57)	20 (0.79)	757 (29.80)	28 (1.10)	44 (1.73)	30 (1.18)	4.5 (0.18)	4.5 (0.18)	M12	101 (222.67)
2519	440 (17.32)	800 (31.50)	472 (18.58)	254 (10.00)	218 (8.58)	370 (14.57)	370 (14.57)	20 (0.79)	757 (29.80)	28 (1.10)	44 (1.73)	30 (1.18)	4.5 (0.18)	4.5 (0.18)	M12	107 (235.90)

Table 10.26 Three-Phase 400 V Class (IP20/UL Open Type)

Model	Dimensions mm (in)															Est. Weight kg (lb)
	W	H	D	D1	D2	W1	W2	W5 (Maximum)	H1	H2	H3	H4	t1	t2	d	
4380	440 (17.32)	800 (31.50)	472 (18.58)	254 (10.00)	218 (8.58)	370 (14.57)	370 (14.57)	20 (0.79)	757 (29.80)	28 (1.10)	44 (1.73)	30 (1.18)	4.5 (0.18)	4.5 (0.18)	M12	107 (235.90)

10.7 Peripheral Devices and Options

Table 10.27 to Table 10.32 show the available peripheral devices and options for the drive. Contact Yaskawa or your nearest sales representative to make an order.

- Selection: Refer to the drive catalog for information about available products.
- Installation and wiring: Refer to the instruction manual for each option.

Table 10.27 Main Circuit Options

Name	Model	Intended Use
DC Reactor	UZDA series	To improve the drive input power factor. • To prevent damage to the drive when the power supply capacity is large. You must only use this option when the power supply capacity is more than 600 kVA. • To decrease harmonic current. • To improve the power supply total power factor.
AC Reactor	UZBA series	To improve the drive input power factor. • To prevent damage to the drive when the power supply capacity is large. You must only use this option when the power supply capacity is more than 600 kVA. • To decrease harmonic current. • To improve the power supply total power factor.
Braking Resistor	ERF-150WJ series	To decrease the regenerative energy of the motor and decrease the deceleration time (duty cycle of 3% ED). You must also use the installation attachment.
Braking Resistor with Fuse	CF120-B579 series	To decrease the regenerative energy of the motor and decrease the deceleration time (duty cycle of 3% ED). You must also use the installation attachment.
Braking Resistor Unit	LKEB series	To decrease the regenerative energy of the motor and decrease the deceleration time (duty cycle of 10% ED). The unit contains a thermal overload relay.
Braking Unit	CDBR series	Use with a braking resistor unit to decrease motor deceleration times.
Earth Leakage Circuit Breaker (ELCB)	NV and NS series	To prevent short circuit damage to the power supply system, provide overload protection for wiring, prevent electrical shock, and provide ground fault protection against earth leakage fires.
Molded-Case Circuit Breaker (MCCB)	NF series	To prevent short circuit damage to the power supply system and provide overload protection for wiring.
Input Side Magnetic Contactor (MC)	SC series	To prevent burn damage when connecting a braking resistor. This option fully opens the circuit between the power supply and drive.
Surge Protective Device	200 V class: DCR2-xA 400 V class: RFN3AL-504KD	To absorb open/close surges from the magnetic contactor and control relay. You must connect this option to magnetic contactors, control relays, magnetic valves, or magnetic brake coils.
Zero-Phase Reactor	F6045GB F11080GB F200160PB	To decrease wiring noise. You can use this option on the input side and the output side of the drive. **Note:** Install this option around the drive input power system and as near to the drive as possible.
Fuse Fuse Holder	CR2LS series FWH series	To prevent part failure, Yaskawa recommends that you connect a fuse to the input side of the drive.
Input Side Noise Filter	LNFB and LNFD series	To decrease wiring noise. **Note:** Install this option around the drive input power system and as near to the drive as possible.
Output Side Noise Filter	LF series	To decrease wiring noise. **Note:** Install this option around the drive input power system and as near to the drive as possible.
Capacitor-Type Noise Filter	3XYG 1003	To decrease wiring noise. You must only use this option around the drive input power system. Do not connect this option to the output side.
Momentary Power Loss Recovery Unit	200 V class: P0010 400 V class: P0020	To make sure that the drive has power during the momentary power loss ride-thru time (2 s).
Low-Voltage Manual Load Switch	“AICUT” LB series	PM motors act as generators when coasting to provide voltage to terminals. Install this option to prevent electric shock.

Table 10.28 Keypad

Name	Model	Intended Use
Bluetooth LCD Keypad	JVOP-KPLCC04xxx	A replacement LCD keypad that can use Bluetooth communications and the DriveWizard Mobile app to connect to the drive. This option does not support gas-resistant specifications (K, R).
LED Keypad	JVOP-KPLEA04xxx	A replacement keypad that has an LED display. Use connection cables that are a maximum of 3 m (9.8 ft) long to connect this keypad for remote operation.
Keypad Remote Cable	1 m: WV001 3 m: WV003	To connect the keypad and drive. This option is an RJ-45, 8-pin straight-through UTP CAT5e cable.
Installation Support Set A	900-192-933-001	To attach the keypad to the control panel. This option uses screws.
Installation Support Set B	900-192-933-002	To attach the keypad to the control panel. This option uses nut clamps. Use this option when there are weld studs in the control panel.

Table 10.29 Kit

Name	Model	Intended Use
External Heatsink Installation Kit	900-193-209-001 900-193-209-002 900-193-209-003	To install the heatsink outside of the control panel. • 900-193-209-001: 2022 to 2041, 4012 to 4023 • 900-193-209-002: 2059, 4030, 4039 • 900-193-209-003: 2075, 2094, 4049, 4056
Braking Resistor Installation Attachment	EZZ020805A	To install a braking resistor to a drive.
External Mounting Attachment for Braking Unit Fin	EZZ021711A	To install the heatsink for the braking unit outside of the control panel.

Table 10.30 Engineering Tool

Name	Model	Intended Use
DriveWizard	-	To use a PC to program drives and manage parameters.

Table 10.31 Others

Name	Model	Intended Use
24 V Power Supply	200 V class: PS-A10LB *1 400 V class: PS-A10HB *1	To supply the drive controller with 24 Vdc power during main power loss.

*1 To install this option to the drive, use the bracket. For more information about the bracket and installations, refer to “Yaskawa AC Drive Option 24 V Power Supply Bracket Installation Manual (TOBPC72060016)”.

Table 10.32 Options

Name	Model	Intended Use	Document No.
Complementary Type PG	PG-B3	This option is for use with CLV and CLV/PM control methods. The drive detects motor rotation speed from the pulse generator as feedback. The drive can then enable control of the output speed to keep a constant motor speed. • Complementary output encoder support • A, B, and Z pulse (Three-phase pulse) input • Maximum input frequency: 50 kHz • Pulse monitor output: Open-collector (24 V, maximum of 30 mA) • Encoder power supply: 12 V, maximum 200 mA current	TOBPC73060075
Motor PG Feedback Line Driver Interface	PG-X3	This option is for use with CLV and CLV/PM control methods. The drive detects motor rotation speed from the pulse generator as feedback. The drive can then enable control of the output speed to keep a constant motor speed. • RS-422 output encoder support • A, B, and Z pulse (differential pulse) input • Maximum input frequency: 300 kHz • Pulse monitor: Equivalent to RS-422 level • Encoder voltage output: 5 V or 12V, maximum 200 mA current	TOBPC73060076
Encoder Type (EnDat)	PG-F3	This option is for use with CLV/PM control method. The drive detects motor rotation speed from the pulse generator as feedback. The drive can then enable control of the output speed to keep a constant motor speed. • Supports EnDat 2.1/01, EnDat 2.2/01, EnDat 2.2/22 models from HEIDENHAIN • Supports HIPERFACE models from SICK STEGMANN • Maximum input frequency: 20 kHz (use for low-speed applications, for example gearless motors) **Note:** EnDat 2.2/22 has no limits on input frequencies. • Cable length: Maximum of 20 m (65.6 ft) for encoders and maximum of 30 m (98.4 ft) for pulse monitors • Pulse monitor: Equivalent to RS-422 level **Note:** You cannot use EnDat 2.2/22. • Encoder voltage output: 5 V at a maximum current of 330 mA, or 8 V at a maximum current of 150 mA **Note:** Use these types of encoder cables: • EnDat 2.1/01 and EnDat 2.2/01: HEIDENHAIN 17-pin cables • EnDat 2.2/22: HEIDENHAIN 8-pin cables • HIPERFACE: SICK STEGMANN 8-pin cables	TOBPC73060077

Name	Model	Intended Use	Document No.
ERN1387 Encoder	PG-E3	This option is for use with CLV/PM control method. The drive detects motor rotation speed from the pulse generator as feedback. The drive can then enable control of the output speed to keep a constant motor speed. • Supports ERN1387 models from HEIDENHAIN • Maximum input frequency: 20 kHz • Cable length: Maximum of 20 m (65.6 ft) for encoders and maximum of 30 m (98.4 ft) for pulse monitors • Pulse monitor: Equivalent to RS-422 level • Output voltage: 5 V ±5% • Maximum output current: 200 mA	TOBPC73060052
Analog Monitor	AO-A3	To use analog signals to monitor the drive output speed and output current. • Output resolution: 11 bits (1/2048) + encoding • Output voltage: -10 Vdc to +10 Vdc (non-insulated) • Output channels: 2 channels	TOBPC73060079
Digital Input	DI-A3	To use digital speed references and MFDI with a maximum 16 bits of resolution. • Input signals: Binary, 16 bits: BCD4 digits + SIGN signal + SET signal Use parameters to select 6 bits, 8 bits, or 12 bits. • Input voltage: 24 V (insulated) • Input current: 8 mA	TOBPC73060080
Digital Output	DO-A3	To output insulated digital signals and monitor the operation status of the drive (alarm signals and detecting zero speed). Type of output: • Photocoupler relays: 6 channels (48 V, 50 mA maximum) • Relay contact output: 2 channels (250 Vac at 1 A or less, 30 Vdc at 1 A or less)	TOBPC73060081
CANopen	SI-S3	This option uses the host controller over CANopen communication to: • Operate and stop the drive • Set and view parameters • Monitor output speed, output current, and other statuses	TOBPC73060085 SIxPC73060085

Table 10.33 Types of Option and Connectors

Option	Available Connector Ports	Number of Options Permitted
PG-B3, PG-X3	CN5-C (CN5-B)	2 *1
PG-F3 *2, PG-E3	CN5-C	1
AO-A3, DO-A3	CN5-A, B, and C	1
DI-A3 *3, SI-S3	CN5-A	1

*1 To connect only one encoder option, use the CN5-C connector. To connect two encoder options, use the CN5-C and CN5-B connectors.
*2 If you use the motor switching function, you cannot use this option.
*3 To use DI-A3 input statuses as monitors, connect the option cards to one of CN5-A, CN5-B, or CN5-C. Use *U1-17 [DI-A3 Input Status]* to confirm the DI-A3 input status.

11

Parameter List

11.1 Section Safety 420
11.2 How to Read the Parameter List 421
11.3 Parameter Groups 422
11.4 A: Initialization Parameters 423
11.5 b: Application 427
11.6 C: Tuning 429
11.7 d: References 433
11.8 E: Motor Parameters 435
11.9 F: Options 439
11.10 H: Terminal Functions 446
11.11 L: Protection Functions 464
11.12 n: Special Adjustment 469
11.13 o: Keypad-Related Settings 472
11.14 S: Elevator Parameters 479
11.15 T: Auto-Tuning 486
11.16 U: Monitors 488
11.17 Parameters that Change from the Default Settings with A1-02 [Control Method Selection] 504
11.18 Parameters Changed by E1-03 [V/f Pattern Selection] 506
11.19 Defaults by Drive Model 507
11.20 Defaults and Setting Ranges Changed by o1-03 [Speed Display Unit Selection] 513

11.1 Section Safety

⚠DANGER

Do not ignore the safety messages in this manual.

If you ignore the safety messages in this manual, it will cause serious injury or death. The manufacturer is not responsible for injuries or damage to equipment.

11.2 How to Read the Parameter List

◆ Icons and Terms that Identify Parameters and Control Methods

Icon	Description
V/f	The parameter is available when operating the drive with V/f Control.
OLV	The parameter is available when operating the drive with Open Loop Vector Control.
CLV	The parameter is available when operating the drive with Closed Loop Vector Control.
CLV/PM	The parameter is available when operating the drive with Closed Loop Vector Control for PM.
Hex.	Hexadecimal numbers that represent MEMOBUS addresses to change parameters over network communication.
RUN	You can change the parameter setting during Run.
Expert	The parameter is available in Expert Mode only. *1

*1 Set *A1-01 = 3 [Access Level Selection = Expert Level]* to show and set Expert Mode parameters on the keypad.

Note:
Gray icons identify parameters that are not available in the specified control method.

11.3 Parameter Groups

Represents the type of product parameters.

Parameters	Name
A1	Initialization
A2	User Parameters
b1	Operation Mode Selection
b2	Magnetic Flux Compensation
b4	Timer Function
b6	Dwell Function
b7	Droop Control
b8	Energy Saving
C1	Accel & Decel Ramp
C2	Jerk Characteristics
C3	Slip Compensation
C4	Torque Compensation
C5	Auto Speed Regulator (ASR)
C6	Carrier Frequency
d1	Speed Reference
d6	Field Forcing
E1	V/f Pattern for Motor 1
E2	Motor Parameters
E3	V/f Pattern for Motor 2
E4	Motor 2 Parameters
E5	PM Motor Settings
F1	Encoder Option Setup
F3	Digital Input Option
F4	Analog Output Option
F5	Digital Output Option
F6	Communication Options
H1	Digital Inputs
H2	Digital Outputs
H3	Analog Inputs
H4	Analog Outputs
H5	Serial Communication
L1	Motor Protection
L2	Undervoltage Detection

Parameters	Name
L3	Stall Prevention
L4	Speed Detection
L5	Automatic Fault Reset
L6	Torque Detection
L7	Torque Limit
L8	Drive Protection
n1	Hunting Prevention
n2	Auto Freq Regulator (AFR)
n5	Feed Forward Control
n6	Online Tuning
n8	PM Motor Control Tuning
nA	PM Motor Control Tuning
o1	Keypad Display
o2	Keypad Operation
o3	Copy Keypad Function
o4	Maintenance Monitors
o5	Log Function
S1	Brake/Contactor Sequence
S2	Elevator Slip Compensation
S3	Start/Stop Optimization
S4	Rescue Operation
S5	Elevator Functionality
S6	Elevator Error Detection
T0	Tuning Mode Selection
T1	Induction Motor Auto-Tuning
T2	PM Motor Auto-Tuning
U1	Operation Status Monitors
U2	Fault Trace
U3	Fault History
U4	Maintenance Monitors
U6	Operation Status Monitors
U9	Fault Trace

11.4 A: Initialization Parameters

◆ A1: Initialization

No. (Hex.)	Name	Description	Default (Range)	Ref.
A1-00 (0100) RUN	Language Selection	V/f OLV CLV CLV/PM Sets the language for the LCD keypad. **Note:** When you use *A1-03 [Initialize Parameters]* to initialize the drive, the drive will not reset this parameter. 0 : English 1 : Japanese 2 : German 3 : French 4 : Italian 5 : Spanish 6 : Portuguese 7 : Chinese 8 : Czech 9 : Russian 10 : Turkish 11 : Polish 12 : Greek	7 (0 - 12)	517
A1-01 (0101) RUN	Access Level Selection	V/f OLV CLV CLV/PM Sets user access to parameters. The access level controls which parameters the keypad will display, and which parameters the user can set. 0 : Operation Only 1 : User Parameters 2 : Advanced Level 3 : Expert Level	2 (0 - 3)	517
A1-02 (0102)	Control Method Selection	V/f OLV CLV CLV/PM Sets the control method for the drive application and the motor. 0 : V/f Control 2 : Open Loop Vector 3 : Closed Loop Vector 7 : PM Closed Loop Vector	0 (0, 2, 3, 7)	518
A1-03 (0103)	Initialize Parameters	V/f OLV CLV CLV/PM Sets parameters to default values. 0 : No Initialization 1110 : User Initialization 2220 : 2-Wire Initialization	0 (0 - 2220)	518
A1-04 (0104)	Password	V/f OLV CLV CLV/PM Entry point for the password set in *A1-05 [Password Setting]*. You can view the settings of parameters that are locked without entering the password. Enter the correct password in this parameter to change parameter settings.	0000 (0000 - 9999)	520
A1-05 (0105)	Password Setting	V/f OLV CLV CLV/PM Set the password to lock parameters and prevent changes to parameter settings. Enter the correct password in *A1-04 [Password]* to unlock parameters and accept changes.	0000 (0000 - 9999)	520
A1-11 (111D) Expert	Firmware Update Lock	V/f OLV CLV CLV/PM Protects the drive firmware. When you enable the protection, you cannot update the drive firmware. 0 : Disabled 1 : Enabled	0 (0, 1)	521
A1-12 (1564)	Bluetooth ID	V/f OLV CLV CLV/PM Sets the password necessary to use Bluetooth to control the drive with a smartphone or tablet.	1915 (0000 - 9999)	521

◆ A2: User Parameters

No. (Hex.)	Name	Description	Default (Range)	Ref.
A2-01 (0106)	User Parameter 1	V/f OLV CLV CLV/PM Sets the parameter number to be shown for number 1 of the [User Custom Parameters] under the main menu. You can select a maximum of 32 parameters for the drive and set them to parameters *A2-01* to *A2-32*.	Determined by A1-02	521
A2-02 (0107)	User Parameter 2	V/f OLV CLV CLV/PM Sets the parameter number to be shown for number 2 of the [User Custom Parameters] under the main menu. You can select a maximum of 32 parameters for the drive and set them to parameters *A2-01* to *A2-32*.	Determined by A1-02	521
A2-03 (0108)	User Parameter 3	V/f OLV CLV CLV/PM Sets the parameter number to be shown for number 3 of the [User Custom Parameters] under the main menu. You can select a maximum of 32 parameters for the drive and set them to parameters *A2-01* to *A2-32*.	Determined by A1-02	521
A2-04 (0109)	User Parameter 4	V/f OLV CLV CLV/PM Sets the parameter number to be shown for number 4 of the [User Custom Parameters] under the main menu. You can select a maximum of 32 parameters for the drive and set them to parameters *A2-01* to *A2-32*.	Determined by A1-02	521
A2-05 (010A)	User Parameter 5	V/f OLV CLV CLV/PM Sets the parameter number to be shown for number 5 of the [User Custom Parameters] under the main menu. You can select a maximum of 32 parameters for the drive and set them to parameters *A2-01* to *A2-32*.	Determined by A1-02	521
A2-06 (010B)	User Parameter 6	V/f OLV CLV CLV/PM Sets the parameter number to be shown for number 6 of the [User Custom Parameters] under the main menu. You can select a maximum of 32 parameters for the drive and set them to parameters *A2-01* to *A2-32*.	Determined by A1-02	521
A2-07 (010C)	User Parameter 7	V/f OLV CLV CLV/PM Sets the parameter number to be shown for number 7 of the [User Custom Parameters] under the main menu. You can select a maximum of 32 parameters for the drive and set them to parameters *A2-01* to *A2-32*.	Determined by A1-02	521
A2-08 (010D)	User Parameter 8	V/f OLV CLV CLV/PM Sets the parameter number to be shown for number 8 of the [User Custom Parameters] under the main menu. You can select a maximum of 32 parameters for the drive and set them to parameters *A2-01* to *A2-32*.	Determined by A1-02	521
A2-09 (010E)	User Parameter 9	V/f OLV CLV CLV/PM Sets the parameter number to be shown for number 9 of the [User Custom Parameters] under the main menu. You can select a maximum of 32 parameters for the drive and set them to parameters *A2-01* to *A2-32*.	Determined by A1-02	521
A2-10 (010F)	User Parameter 10	V/f OLV CLV CLV/PM Sets the parameter number to be shown for number 10 of the [User Custom Parameters] under the main menu. You can select a maximum of 32 parameters for the drive and set them to parameters *A2-01* to *A2-32*.	Determined by A1-02	521
A2-11 (0110)	User Parameter 11	V/f OLV CLV CLV/PM Sets the parameter number to be shown for number 11 of the [User Custom Parameters] under the main menu. You can select a maximum of 32 parameters for the drive and set them to parameters *A2-01* to *A2-32*.	Determined by A1-02	521
A2-12 (0111)	User Parameter 12	V/f OLV CLV CLV/PM Sets the parameter number to be shown for number 12 of the [User Custom Parameters] under the main menu. You can select a maximum of 32 parameters for the drive and set them to parameters *A2-01* to *A2-32*.	Determined by A1-02	521
A2-13 (0112)	User Parameter 13	V/f OLV CLV CLV/PM Sets the parameter number to be shown for number 13 of the [User Custom Parameters] under the main menu. You can select a maximum of 32 parameters for the drive and set them to parameters *A2-01* to *A2-32*.	Determined by A1-02	521
A2-14 (0113)	User Parameter 14	V/f OLV CLV CLV/PM Sets the parameter number to be shown for number 14 of the [User Custom Parameters] under the main menu. You can select a maximum of 32 parameters for the drive and set them to parameters *A2-01* to *A2-32*.	Determined by A1-02	521
A2-15 (0114)	User Parameter 15	V/f OLV CLV CLV/PM Sets the parameter number to be shown for number 15 of the [User Custom Parameters] under the main menu. You can select a maximum of 32 parameters for the drive and set them to parameters *A2-01* to *A2-32*.	Determined by A1-02	521
A2-16 (0115)	User Parameter 16	V/f OLV CLV CLV/PM Sets the parameter number to be shown for number 16 of the [User Custom Parameters] under the main menu. You can select a maximum of 32 parameters for the drive and set them to parameters *A2-01* to *A2-32*.	Determined by A1-02	521
A2-17 (0116)	User Parameter 17	V/f OLV CLV CLV/PM Sets the parameter number to be shown for number 17 of the [User Custom Parameters] under the main menu. You can select a maximum of 32 parameters for the drive and set them to parameters *A2-01* to *A2-32*. You can set *A2-17* to *A2-32* when *A2-33 = 0 [User Parameter Auto Selection = Disabled: Manual Entry Required]*.	Determined by A1-02	521

No. (Hex.)	Name	Description	Default (Range)	Ref.
A2-18 (0117)	User Parameter 18	V/f OLV CLV CLV/PM Sets the parameter number to be shown for number 18 of the [User Custom Parameters] under the main menu. You can select a maximum of 32 parameters for the drive and set them to parameters *A2-01* to *A2-32*. You can set *A2-17* to *A2-32* when *A2-33 = 0 [User Parameter Auto Selection = Disabled: Manual Entry Required]*.	Determined by A1-02	521
A2-19 (0118)	User Parameter 19	V/f OLV CLV CLV/PM Sets the parameter number to be shown for number 19 of the [User Custom Parameters] under the main menu. You can select a maximum of 32 parameters for the drive and set them to parameters *A2-01* to *A2-32*. You can set *A2-17* to *A2-32* when *A2-33 = 0 [User Parameter Auto Selection = Disabled: Manual Entry Required]*.	Determined by A1-02	521
A2-20 (0119)	User Parameter 20	V/f OLV CLV CLV/PM Sets the parameter number to be shown for number 20 of the [User Custom Parameters] under the main menu. You can select a maximum of 32 parameters for the drive and set them to parameters *A2-01* to *A2-32*. You can set *A2-17* to *A2-32* when *A2-33 = 0 [User Parameter Auto Selection = Disabled: Manual Entry Required]*.	Determined by A1-02	521
A2-21 (011A)	User Parameter 21	V/f OLV CLV CLV/PM Sets the parameter number to be shown for number 21 of the [User Custom Parameters] under the main menu. You can select a maximum of 32 parameters for the drive and set them to parameters *A2-01* to *A2-32*. You can set *A2-17* to *A2-32* when *A2-33 = 0 [User Parameter Auto Selection = Disabled: Manual Entry Required]*.	Determined by A1-02	521
A2-22 (011B)	User Parameter 22	V/f OLV CLV CLV/PM Sets the parameter number to be shown for number 22 of the [User Custom Parameters] under the main menu. You can select a maximum of 32 parameters for the drive and set them to parameters *A2-01* to *A2-32*. You can set *A2-17* to *A2-32* when *A2-33 = 0 [User Parameter Auto Selection = Disabled: Manual Entry Required]*.	Determined by A1-02	521
A2-23 (011C)	User Parameter 23	V/f OLV CLV CLV/PM Sets the parameter number to be shown for number 23 of the [User Custom Parameters] under the main menu. You can select a maximum of 32 parameters for the drive and set them to parameters *A2-01* to *A2-32*. You can set *A2-17* to *A2-32* when *A2-33 = 0 [User Parameter Auto Selection = Disabled: Manual Entry Required]*.	Determined by A1-02	521
A2-24 (011D)	User Parameter 24	V/f OLV CLV CLV/PM Sets the parameter number to be shown for number 24 of the [User Custom Parameters] under the main menu. You can select a maximum of 32 parameters for the drive and set them to parameters *A2-01* to *A2-32*. You can set *A2-17* to *A2-32* when *A2-33 = 0 [User Parameter Auto Selection = Disabled: Manual Entry Required]*.	Determined by A1-02	521
A2-25 (011E)	User Parameter 25	V/f OLV CLV CLV/PM Sets the parameter number to be shown for number 25 of the [User Custom Parameters] under the main menu. You can select a maximum of 32 parameters for the drive and set them to parameters *A2-01* to *A2-32*. You can set *A2-17* to *A2-32* when *A2-33 = 0 [User Parameter Auto Selection = Disabled: Manual Entry Required]*.	Determined by A1-02	521
A2-26 (011F)	User Parameter 26	V/f OLV CLV CLV/PM Sets the parameter number to be shown for number 26 of the [User Custom Parameters] under the main menu. You can select a maximum of 32 parameters for the drive and set them to parameters *A2-01* to *A2-32*. You can set *A2-17* to *A2-32* when *A2-33 = 0 [User Parameter Auto Selection = Disabled: Manual Entry Required]*.	Determined by A1-02	521
A2-27 (0120)	User Parameter 27	V/f OLV CLV CLV/PM Sets the parameter number to be shown for number 27 of the [User Custom Parameters] under the main menu. You can select a maximum of 32 parameters for the drive and set them to parameters *A2-01* to *A2-32*. You can set *A2-17* to *A2-32* when *A2-33 = 0 [User Parameter Auto Selection = Disabled: Manual Entry Required]*.	Determined by A1-02	521
A2-28 (0121)	User Parameter 28	V/f OLV CLV CLV/PM Sets the parameter number to be shown for number 28 of the [User Custom Parameters] under the main menu. You can select a maximum of 32 parameters for the drive and set them to parameters *A2-01* to *A2-32*. You can set *A2-17* to *A2-32* when *A2-33 = 0 [User Parameter Auto Selection = Disabled: Manual Entry Required]*.	Determined by A1-02	521
A2-29 (0122)	User Parameter 29	V/f OLV CLV CLV/PM Sets the parameter number to be shown for number 29 of the [User Custom Parameters] under the main menu. You can select a maximum of 32 parameters for the drive and set them to parameters *A2-01* to *A2-32*. You can set *A2-17* to *A2-32* when *A2-33 = 0 [User Parameter Auto Selection = Disabled: Manual Entry Required]*.	Determined by A1-02	521
A2-30 (0123)	User Parameter 30	V/f OLV CLV CLV/PM Sets the parameter number to be shown for number 30 of the [User Custom Parameters] under the main menu. You can select a maximum of 32 parameters for the drive and set them to parameters *A2-01* to *A2-32*. You can set *A2-17* to *A2-32* when *A2-33 = 0 [User Parameter Auto Selection = Disabled: Manual Entry Required]*.	Determined by A1-02	521
A2-31 (0124)	User Parameter 31	V/f OLV CLV CLV/PM Sets the parameter number to be shown for number 31 of the [User Custom Parameters] under the main menu. You can select a maximum of 32 parameters for the drive and set them to parameters *A2-01* to *A2-32*. You can set *A2-17* to *A2-32* when *A2-33 = 0 [User Parameter Auto Selection = Disabled: Manual Entry Required]*.	Determined by A1-02	521

No. (Hex.)	Name	Description	Default (Range)	Ref.
A2-32 (0125)	User Parameter 32	V/f OLV CLV CLV/PM Sets the parameter number to be shown for number 32 of the [User Custom Parameters] under the main menu. You can select a maximum of 32 parameters for the drive and set them to parameters *A2-01* to *A2-32*. You can set *A2-17* to *A2-32* when *A2-33 = 0 [User Parameter Auto Selection = Disabled: Manual Entry Required]*.	Determined by A1-02	521
A2-33 (0126)	User Parameter Auto Selection	V/f OLV CLV CLV/PM Sets the automatic save feature for changes to parameters *A2-17 to A2-32 [User Parameters 17 to 32]*. 0 : Disabled: Manual Entry Required 1 : Enabled: Auto Save Recent Parms	0 (0, 1)	522

11.5 b: Application

◆ b1: Operation Mode Selection

No. (Hex.)	Name	Description	Default (Range)	Ref.
b1-01 (0180)	Speed Reference Selection 1	V/f OLV CLV CLV/PM Sets the input method for the speed reference. 0 : Keypad 1 : Analog Input 2 : Memobus/Modbus Communications 3 : Option PCB	0 (0 - 3)	523
b1-02 (0181)	Up/Down Command Selection 1	V/f OLV CLV CLV/PM Sets the input method for the Up/Down command. 0 : Keypad 1 : Digital Input 2 : Memobus/Modbus Communications 3 : Option PCB	1 (0 - 3)	525
b1-03 (0182)	Stopping Method Selection	V/f OLV CLV CLV/PM Sets the method to stop the motor after you remove an Up/Down command or enter a Stop command. **Note:** When *A1-02 = 0, 2 [Control Method Selection = V/f, OLV]*, the setting range is 0, 1. 0 : Ramp to Stop 1 : Coast to Stop 4 : Elevator Emergency Stop	0 (0, 1, 4)	525
b1-06 (0185) Expert	Digital Input Reading	V/f OLV CLV CLV/PM Sets the number of times that the drive reads the sequence input command to prevent malfunction because of electrical interference. 0 : Single Scan 1 : Double Scan	1 (0, 1)	526
b1-08 (0187) Expert	Up/Down Select in PRG Mode	V/f OLV CLV CLV/PM Sets the conditions for the drive to accept an Up/Down command entered from an external source when you use the keypad to set parameters. 0 : Disregard RUN while Programming 1 : Accept RUN while Programming 2 : Allow Programming Only at Stop	0 0 (0 - 2)	527
b1-14 (01C3)	Phase Order Selection	V/f OLV CLV CLV/PM Sets the phase order for output terminals U/T1, V/T2, and W/T3. This parameter can align the Up command from the drive and the up direction of the motor without changing wiring. **Note:** If you cannot set the motor rotation direction correctly, use the Rotation Direction Trouble Shoot Function to solve the problem. 0 : Standard 1 : Switch Phase Order	0 (0, 1)	527
b1-35 (1117) Expert	Digital Input Deadband Time	V/f OLV CLV CLV/PM Sets the deadband time for MFDIs.	0.0 ms (0.0 - 100.0 ms)	528

◆ b2: Magnetic Flux Compensation

No. (Hex.)	Name	Description	Default (Range)	Ref.
b2-08 (0190) Expert	Magnetic Flux Compensation Value	V/f OLV CLV CLV/PM Sets how much current the drive injects when DC Injection Braking at Start starts (Initial Excitation) as a percentage of *E2-03 [Motor No-Load Current]*.	0% (0 - 1000%)	528

◆ b4: Timer Function

No. (Hex.)	Name	Description	Default (Range)	Ref.
b4-01 (01A3) Expert	Timer Function ON-Delay Time	V/f OLV CLV CLV/PM Sets the ON-delay time for the timer input.	0.0 s (0.0 - 3000.0 s)	529
b4-02 (01A4) Expert	Timer Function OFF-Delay Time	V/f OLV CLV CLV/PM Sets the OFF-delay time for the timer input.	0.0 s (0.0 - 3000.0 s)	529

◆ b6: Dwell Function

No. (Hex.)	Name	Description	Default (Range)	Ref.
b6-01 (01B6) Expert	Dwell Speed Reference at Start	V/f OLV CLV CLV/PM Sets the output speed that the drive will momentarily hold when the motor starts.	0.0% (0.0 - 100.0%)	530
b6-02 (01B7) Expert	Dwell Time at Start	V/f OLV CLV CLV/PM Sets the length of time that the drive will hold the output speed when the motor starts.	0.0 s (0.0 - 10.0 s)	530
b6-03 (01B8) Expert	Dwell Speed Reference at Stop	V/f OLV CLV CLV/PM Sets the output speed that the drive will momentarily hold when ramping to stop the motor.	0.0% (0.0 - 100.0%)	530
b6-04 (01B9) Expert	Dwell Time at Stop	V/f OLV CLV CLV/PM Sets the length of time for the drive to hold the output speed when ramping to stop the motor.	0.0 s (0.0 - 10.0 s)	530

◆ b7: Droop Control

No. (Hex.)	Name	Description	Default (Range)	Ref.
b7-01 (01CA) RUN Expert	Droop Control Gain	V/f OLV CLV CLV/PM Sets the amount of deceleration when the torque reference is at 100% as a percentage of *E1-04 [Maximum Output Frequency]*.	0.0% (0.0 - 100.0%)	530
b7-02 (01CB) RUN Expert	Droop Control Delay Time	V/f OLV CLV CLV/PM Sets the responsiveness of Droop control. Decrease this setting when drive response is slow. Increase this setting when hunting or oscillation occur.	0.05 s (0.03 - 2.00 s)	531

◆ b8: Energy Saving

No. (Hex.)	Name	Description	Default (Range)	Ref.
b8-01 (01CC) Expert	Energy Saving Control Selection	V/f OLV CLV CLV/PM Sets the Energy-saving control function. 0 : Disabled 1 : Enabled	0 (0, 1)	532
b8-16 (01F8) Expert	PM E-Save Coefficient Ki	V/f OLV CLV CLV/PM Sets torque linearity. This parameter uses the Ki value from the motor nameplate. Usually it is not necessary to change this setting.	0.10 (0.00 - 2.00)	533
b8-17 (01F9) Expert	PM E-Save Coefficient Kt	V/f OLV CLV CLV/PM Sets torque linearity. This parameter uses the Kt value from the motor nameplate. Usually it is not necessary to change this setting.	1.00 (0.00 - 2.00)	533
b8-51 (0B01) Expert	Standby Mode Wait Time	V/f OLV CLV CLV/PM Sets the delay time before turning off the electromagnetic contactor after the drive stops. **Note:** • If the drive frequently moves between Standby Mode and Normal Mode, it can cause early wear on the electromagnetic contactor in the main circuit. The design life of the electromagnetic contactor in the drive main circuit is approximately 10 years when you turn it ON and OFF 48 times a day. • If you open and close the electromagnetic contactor too much, it will decrease the service life of the drive.	290 s (10 - 6000 s)	533

11.6 C: Tuning

◆ C1: Accel & Decel Ramp

No. (Hex.)	Name	Description	Default (Range)	Ref.
C1-01 (0200) RUN	Acceleration Ramp 1	V/f OLV CLV CLV/PM Sets the ramp to accelerate from zero to maximum output speed. **Note:** Parameter *o1-03 [Speed Display Unit Selection]* sets the units for this parameter.	1.50 s (0.00 - 600.00 s)	536
C1-02 (0201) RUN	Deceleration Ramp 1	V/f OLV CLV CLV/PM Sets the ramp to decelerate from maximum output speed to zero. **Note:** Parameter *o1-03 [Speed Display Unit Selection]* sets the units for this parameter.	1.50 s (0.00 - 600.00 s)	536
C1-03 (0202) RUN Expert	Acceleration Ramp 2	V/f OLV CLV CLV/PM Sets the ramp to accelerate from zero to maximum output speed. **Note:** Parameter *o1-03 [Speed Display Unit Selection]* sets the units for this parameter.	1.50 s (0.00 - 600.00 s)	536
C1-04 (0203) RUN Expert	Deceleration Ramp 2	V/f OLV CLV CLV/PM Sets the ramp to decelerate from maximum output speed to zero. **Note:** Parameter *o1-03 [Speed Display Unit Selection]* sets the units for this parameter.	1.50 s (0.00 - 600.00 s)	536
C1-05 (0204) RUN Expert	Acceleration Ramp 3	V/f OLV CLV CLV/PM Sets the ramp to accelerate from zero to maximum output speed. **Note:** Parameter *o1-03 [Speed Display Unit Selection]* sets the units for this parameter.	1.50 s (0.00 - 600.00 s)	536
C1-06 (0205) RUN Expert	Deceleration Ramp 3	V/f OLV CLV CLV/PM Sets the ramp to decelerate from maximum output speed to zero. **Note:** Parameter *o1-03 [Speed Display Unit Selection]* sets the units for this parameter.	1.50 s (0.00 - 600.00 s)	537
C1-07 (0206) RUN Expert	Acceleration Ramp 4	V/f OLV CLV CLV/PM Sets the ramp to accelerate from zero to maximum output speed. **Note:** Parameter *o1-03 [Speed Display Unit Selection]* sets the units for this parameter.	1.50 s (0.00 - 600.00 s)	537
C1-08 (0207) RUN Expert	Deceleration Ramp 4	V/f OLV CLV CLV/PM Sets the ramp to decelerate from maximum output speed to zero. **Note:** Parameter *o1-03 [Speed Display Unit Selection]* sets the units for this parameter.	1.50 s (0.00 - 600.00 s)	537
C1-09 (0208) Expert	Emergency Stop Ramp	V/f OLV CLV CLV/PM Sets the ramp that the drive will decelerate to zero for an Emergency Stop. **Note:** • If you decelerate the drive too quickly, the drive will detect an *ov [Overvoltage]* fault, shut off the output, and the motor will coast to stop. To prevent motor coasting and stop the motor quickly and safely, make sure to set an Emergency Stop Ramp in *C1-09*. • Parameter *o1-03 [Speed Display Unit Selection]* sets the units for this parameter.	1.50 s (0.00 - 600.00 s)	537
C1-10 (0209) Expert	Accel/Decel Ramp Setting Units	V/f OLV CLV CLV/PM Sets the setting units for *C1-01 to C1-08 [Accel/Decel Ramps 1 to 4]*, *C1-09 [Emergency Stop Ramp]*, and *C1-15 [Inspection Deceleration Ramp]*. 0 : 0.01 s (0.00 to 600.00 s) 1 : 0.1 s (0.0 to 6000.0 s)	0 (0, 1)	538
C1-11 (020A) Expert	Accel/Decel Ramp Switchover Spd	V/f OLV CLV CLV/PM Sets the speed at which the drive will automatically change acceleration and deceleration ramps.	0.0% (0.0 - 100.0%)	538
C1-12 (0246) Expert	Motor 2 Acceleration Ramp	V/f OLV CLV CLV/PM Sets the ramp to accelerate from 0 to maximum speed when you use an MFDI terminal set for *H1-xx = 16 [MFDI Function Selection = Motor 2 Selection]* to select motor 2. **Note:** If you do not set any MFDI terminals to *H1-xx = 16 or 116*, the keypad will not show this parameter.	1.00 s (0.00 - 600.00 s)	538

No. (Hex.)	Name	Description	Default (Range)	Ref.
C1-13 (0247) Expert	Motor 2 Deceleration Ramp	V/f OLV CLV CLV/PM Sets the ramp to decelerate from maximum speed to 0 when you use an MFDI terminal set for *H1-xx = 16 [MFDI Function Selection = Motor 2 Selection]* to select motor 2. **Note:** If you do not set any MFDI terminals to *H1-xx = 16 or 116*, the keypad will not show this parameter.	1.00 s (0.00 - 600.00 s)	539
C1-15 (0260)	Inspection Deceleration Ramp	V/f OLV CLV CLV/PM Sets the deceleration ramp during Inspection Operation. **Note:** Parameter *o1-03 [Speed Display Unit Selection]* sets the units for this parameter.	0.00 s (0.00 - 2.00 s)	539

◆ C2: Jerk Characteristics

No. (Hex.)	Name	Description	Default (Range)	Ref.
C2-01 (020B)	Jerk @ Start of Accel	V/f OLV CLV CLV/PM Sets the jerk at the start of acceleration. **Note:** Parameter *o1-03 [Speed Display Unit Selection]* sets the units for this parameter.	0.50 s (0.00 - 10.00 s)	539
C2-02 (020C)	Jerk @ End of Accel	V/f OLV CLV CLV/PM Sets the jerk at the completion of acceleration. **Note:** Parameter *o1-03 [Speed Display Unit Selection]* sets the units for this parameter.	0.50 s (0.00 - 10.00 s)	539
C2-03 (020D)	Jerk @ Start of Decel	V/f OLV CLV CLV/PM Sets the jerk at the start of deceleration. **Note:** Parameter *o1-03 [Speed Display Unit Selection]* sets the units for this parameter.	0.50 s (0.00 - 10.00 s)	540
C2-04 (020E)	Jerk @ End of Decel	V/f OLV CLV CLV/PM Sets the jerk at the completion of deceleration. **Note:** Parameter *o1-03 [Speed Display Unit Selection]* sets the units for this parameter.	0.50 s (0.00 - 10.00 s)	540
C2-05 (025F)	Jerk below Leveling Speed	V/f OLV CLV CLV/PM Sets the jerk when the speed reference is lower than the leveling speed setting. **Note:** Parameter *o1-03 [Speed Display Unit Selection]* sets the units for this parameter.	0.50 s (0.00 - 10.00 s)	540

◆ C3: Slip Compensation

No. (Hex.)	Name	Description	Default (Range)	Ref.
C3-01 (020F) RUN	Slip Compensation Gain	V/f OLV CLV CLV/PM Sets the gain for the slip compensation function. Usually it is not necessary to change this setting. **Note:** Correctly set these parameters before you change the slip compensation gain: • *E2-01 [Motor Rated Current (FLA)]* • *E2-02 [Motor Rated Slip]* • *E2-03 [Motor No-Load Current]*	1.0 (0.0 - 2.5)	540
C3-02 (0210) RUN	Slip Compensation Delay Time	V/f OLV CLV CLV/PM Sets the slip compensation delay time when speed is unstable or when the slip compensation response is too slow. Usually it is not necessary to change this setting.	2000 ms (0 - 10000 ms)	541
C3-03 (0211) Expert	Slip Compensation Limit	V/f OLV CLV CLV/PM Sets the upper limit for the slip compensation function as a percentage of the motor rated slip.	200% (0 - 250%)	541
C3-04 (0212) Expert	Slip Compensation at Regen	V/f OLV CLV CLV/PM Sets the slip compensation function during regeneration. 0 : Disabled 1 : Enabled Above 6Hz 2 : Enabled Above Defined Range	0 (0 - 2)	541
C3-05 (0213) Expert	Output Voltage Limit Selection	V/f OLV CLV CLV/PM Sets the automatic reduction of motor magnetic flux when the output voltage is saturated. 0 : Disabled 1 : Enabled	1 (0, 1)	542

◆ C4: Torque Compensation

No. (Hex.)	Name	Description	Default (Range)	Ref.
C4-01 (0215) RUN	Torque Compensation Gain	V/f OLV CLV CLV/PM Sets the gain for the torque compensation function. Use this parameter value for motor 1 when operating multiple motors.	1.00 (0.00 - 2.50)	542
C4-02 (0216) RUN Expert	Torque Compensation Delay Time	V/f OLV CLV CLV/PM Sets the torque compensation delay time. Usually it is not necessary to change this setting.	Determined by A1-02 (0 - 60000 ms)	542
C4-03 (0217) Expert	Torque Compensation @ Up Start	V/f OLV CLV CLV/PM Sets the amount of torque reference for Up start as a percentage of the motor rated torque.	0.0% (0.0 - 200.0%)	543
C4-04 (0218) Expert	Torque Compensation @ Down Start	V/f OLV CLV CLV/PM Sets the amount of torque reference for Down start as a percentage of the motor rated torque.	0.0% (-200.0 - 0.0%)	543
C4-05 (0219) Expert	Torque Compensation Time	V/f OLV CLV CLV/PM Sets the starting torque constant to use with *C4-03 [Torque Compensation @ Up Start]* and *C4-04 [Torque Compensation @ Down Start]*.	10 ms (0 - 200 ms)	543

◆ C5: Auto Speed Regulator (ASR)

No. (Hex.)	Name	Description	Default (Range)	Ref.
C5-01 (021B) RUN	ASR Proportional Gain 1	V/f OLV CLV CLV/PM Sets the gain to adjust ASR response at high speed.	Determined by A1-02 (0.00 - 300.00)	545
C5-02 (021C) RUN	ASR Integral Time 1	V/f OLV CLV CLV/PM Sets the ASR integral time at high speed.	Determined by A1-02 (0.000 - 60.000 s)	545
C5-03 (021D) RUN	ASR Proportional Gain 2	V/f OLV CLV CLV/PM Sets the gain to adjust ASR response at low speed.	Determined by A1-02 (0.00 - 300.00)	545
C5-04 (021E) RUN	ASR Integral Time 2	V/f OLV CLV CLV/PM Sets the ASR integral time at low speed.	Determined by A1-02 (0.000 - 60.000 s)	546
C5-06 (0220)	ASR Delay Time	V/f OLV CLV CLV/PM Sets the filter time constant of the torque reference output from the speed loop. Usually it is not necessary to change this setting.	0.004 s (0.000 - 0.500 s)	546
C5-07 (0221)	ASR Gain Switchover Speed	V/f OLV CLV CLV/PM Sets the speed at which the drive will switch among these parameters: *C5-01 [ASR Proportional Gain 1]*, *C5-03 [ASR Proportional Gain 2]*, and *C5-13 [ASR Proportional Gain 3]* *C5-02 [ASR Integral Time 1]*, *C5-04 [ASR Integral Time 2]*, and *C5-14 [ASR Integral Time 3]*	Determined by A1-02 (0.0 - 100.0%)	546
C5-08 (0222) Expert	ASR Integral Limit	V/f OLV CLV CLV/PM Sets the upper limit of the ASR integral amount as a percentage of the rated load.	400% (0 - 400%)	546
C5-13 (0272) RUN	ASR Proportional Gain 3	V/f OLV CLV CLV/PM Sets the gain to adjust ASR response at leveling speed. The setting is active for deceleration only.	Determined by A1-02 (0.00 - 300.00)	547
C5-14 (0273) RUN	ASR Integral Time 3	V/f OLV CLV CLV/PM Sets the ASR integral time at leveling speed. The setting is active for deceleration only.	Determined by A1-02 (0.000 - 10.000 s)	547
C5-16 (0271) Expert	ASR Filter Time during Pos. Lock	V/f OLV CLV CLV/PM Sets the filter time constant of the torque reference output from the speed loop during Position Lock. Usually it is not necessary to change this setting.	0.000 s (0.000 - 0.500 s)	547

No. (Hex.)	Name	Description	Default (Range)	Ref.
C5-17 (0276) Expert	Motor Inertia	V/f OLV CLV CLV/PM Sets the motor inertia. **Note:** The display units for the default setting and setting range are different for different models: • 0.0001 kgm² units (setting range: 0.0001 kgm² to 6.0000 kgm²): 2022, 4012 • 0.001 kgm² units (setting range: 0.001 kgm² to 60.000 kgm²): 2031 to 2225, 4019 to 4114 • 0.01 kgm² units (setting range: 0.01 kgm² to 600.00 kgm²): 2269 to 2519, 4140 to 4380	Determined by A1-02 and o2-04 (0.0001 - 6.0000 kgm²)	547
C5-18 (0277) Expert	Load Inertia Ratio	V/f OLV CLV CLV/PM Sets the load inertia ratio for the motor inertia.	1.0 (0.0 - 6000.0)	547
C5-19 (0274) RUN	ASR P Gain during Position Lock	V/f OLV CLV CLV/PM Sets the Speed Control Loop Proportional gain used during Position Lock.	Determined by A1-02 (0.00 - 300.00)	547
C5-20 (0275) RUN	ASR I Time during Position Lock	V/f OLV CLV CLV/PM Sets the Speed Control Loop Integral time used during Position Lock.	0.100 s (0.000 - 10.000 s)	547
C5-29 (0B18) Expert	Speed Control Response	V/f OLV CLV CLV/PM Sets the level of speed control responsiveness. Usually it is not necessary to change this setting. 0 : Standard 1 : High Performance 1	1 (0, 1)	548
C5-50 (0B14) Expert	Notch Filter Frequency	V/f OLV CLV CLV/PM Sets the machine resonance frequency. **Note:** Set *C5-50 = 0 [0 Hz]* to disable the notch filter.	0 Hz (0, 20 - 1000 Hz)	548
C5-51 (0B15) Expert	Notch Filter Bandwidth	V/f OLV CLV CLV/PM Sets the notch width of the notch filter. **Note:** Set *C5-50 = 0 [Notch Filter Frequency = 0 Hz]* to disable the notch filter.	1.0 (0.5 - 5.0)	548

◆ C6: Carrier Frequency

No. (Hex.)	Name	Description	Default (Range)	Ref.
C6-03 (0225)	Carrier Frequency	V/f OLV CLV CLV/PM Sets the carrier frequency.	Determined by o2-04 (1.0 - 15.0 kHz)	548
C6-06 (0228) Expert	PWM Modulation Method	V/f OLV CLV CLV/PM Sets PWM modulation method. 0 : 2/3 Phase Auto-Modulation 2 : 3-Phase Modulation	0 (0, 2)	548
C6-07 (0229) Expert	2/3 Phase Switchover Level	V/f OLV CLV CLV/PM Sets the carrier frequency to 2/3 of the set carrier level.	1.5 (0.5 - 3.0)	549
C6-09 (022B) Expert	Carrier Freq at Rotational Tune	V/f OLV CLV CLV/PM Sets the Auto-Tuning carrier frequency. Usually it is not necessary to change this setting. 0 : 5 kHz 1 : Use C6-03	0 (0, 1)	549
C6-21 (0245) Expert	Carrier Frequency @ Inspection	V/f OLV CLV CLV/PM Sets the carrier frequency during Inspection Operation. 0 : Use the value set to C6-03 1 : 2 kHz	1 (0, 1)	549
C6-23 (025E) Expert	Carrier Frequency @ Pole Search	V/f OLV CLV CLV/PM Sets the carrier frequency when the drive estimates the initial polarity. **Note:** When *C6-23 = 1*, the drive automatically changes the default setting for *n8-84 [Polarity Detection Current]* to 120%. 0 : 2 kHz 1 : Use the value set to C6-03	0 (0, 1)	549
C6-34 (116E) Expert	Carrier Freq Reduce Start Level	V/f OLV CLV CLV/PM Sets the integrated value of drive overload at which the drive starts to decrease the carrier frequency to the value set in *L8-39 [Reduced Carrier Frequency]*.	80% (5 - 90%)	549

11.7 d: References

◆ d1: Speed Reference

No. (Hex.)	Name	Description	Default (Range)	Ref.
d1-01 (0280) RUN	Reference 1	V/f OLV CLV CLV/PM Sets the speed reference in the units from *o1-03 [Speed Display Unit Selection]*.	0.00% (0.00 - 100.00%)	550
d1-02 (0281) RUN	Reference 2	V/f OLV CLV CLV/PM Sets the speed reference in the units from *o1-03 [Speed Display Unit Selection]*.	0.00% (0.00 - 100.00%)	550
d1-03 (0282) RUN	Reference 3	V/f OLV CLV CLV/PM Sets the speed reference in the units from *o1-03 [Speed Display Unit Selection]*.	0.00% (0.00 - 100.00%)	550
d1-04 (0283) RUN	Reference 4	V/f OLV CLV CLV/PM Sets the speed reference in the units from *o1-03 [Speed Display Unit Selection]*.	0.00% (0.00 - 100.00%)	551
d1-05 (0284) RUN	Reference 5	V/f OLV CLV CLV/PM Sets the speed reference in the units from *o1-03 [Speed Display Unit Selection]*.	0.00% (0.00 - 100.00%)	551
d1-06 (0285) RUN	Reference 6	V/f OLV CLV CLV/PM Sets the speed reference in the units from *o1-03 [Speed Display Unit Selection]*.	0.00% (0.00 - 100.00%)	551
d1-07 (0286) RUN	Reference 7	V/f OLV CLV CLV/PM Sets the speed reference in the units from *o1-03 [Speed Display Unit Selection]*.	0.00% (0.00 - 100.00%)	551
d1-08 (0287) RUN	Reference 8	V/f OLV CLV CLV/PM Sets the speed reference in the units from *o1-03 [Speed Display Unit Selection]*.	0.00% (0.00 - 100.00%)	551
d1-18 (02C0)	Speed Reference Selection Mode	V/f OLV CLV CLV/PM Sets the mode of speed reference selection by digital inputs. 0 : Multi-speed Mode1 (d1-01 to 08) 1 : High speed has priority 2 : Leveling speed has priority 3 : Multi-speed Mode2 (d1-02 to 08) 4 : Smart Replacement	0 (0 - 4)	552
d1-19 (02C1) RUN	Nominal Speed	V/f OLV CLV CLV/PM Sets the nominal speed reference when an MFDI terminal set for *H1-xx = 50 [MFDI Function Selection = Nominal Speed]* is active. **Note:** Parameter *o1-03 [Speed Display Unit Selection]* sets the units for this parameter.	100.00% (0.00 - 100.00%)	552
d1-20 (02C2) RUN	Intermediate Speed 1	V/f OLV CLV CLV/PM Sets the intermediate speed reference when an MFDI terminal set for *H1-xx = 51 [MFDI Function Selection = Intermediate Speed]* is active. **Note:** Parameter *o1-03 [Speed Display Unit Selection]* sets the units for this parameter.	0.00% (0.00 - 100.00%)	553
d1-21 (02C3) RUN	Intermediate Speed 2	V/f OLV CLV CLV/PM Sets the intermediate speed reference when MFDI terminals set for *H1-xx = 50, 51, and 52 [MFDI Function Selection = Nominal Speed, Intermediate Speed, and Releveling Speed]* are active. **Note:** Parameter *o1-03 [Speed Display Unit Selection]* sets the units for this parameter.	0.00% (0.00 - 100.00%)	553
d1-22 (02C4) RUN	Intermediate Speed 3	V/f OLV CLV CLV/PM Sets the intermediate speed reference when MFDI terminals set for *H1-xx = 51 and 52 [MFDI Function Selection = Intermediate Speed and Releveling Speed]* are active. **Note:** Parameter *o1-03 [Speed Display Unit Selection]* sets the units for this parameter.	0.00% (0.00 - 100.00%)	553
d1-23 (02C5) RUN	Releveling Speed	V/f OLV CLV CLV/PM Sets the releveling speed reference when an MFDI terminal set for *H1-xx = 52 [MFDI Function Selection = Releveling Speed]* is active. **Note:** Parameter *o1-03 [Speed Display Unit Selection]* sets the units for this parameter.	0.00% (0.00 - 100.00%)	553

No. (Hex.)	Name	Description	Default (Range)	Ref.
d1-24 (02C6) RUN	Inspection Operation Speed	V/f OLV CLV CLV/PM Sets the inspection operation speed when an MFDI terminal set for *H1-xx = 54 [MFDI Function Selection = Inspection Operation]* is active. **Note:** Parameter *o1-03 [Speed Display Unit Selection]* sets the units for this parameter.	50.00% (0.00 - 100.00%)	553
d1-25 (02C7) RUN	Rescue Operation Speed	V/f OLV CLV CLV/PM Sets the speed reference when an MFDI terminal set for *H1-xx = 55 [MFDI Function Selection = Rescue Operation]* is active. **Note:** Parameter *o1-03 [Speed Display Unit Selection]* sets the units for this parameter.	10.00% (0.00 - 100.00%)	554
d1-26 (02C8) RUN	Leveling Speed	V/f OLV CLV CLV/PM Sets the speed reference when an MFDI terminal set for *H1-xx = 53 [MFDI Function Selection = Leveling Speed]* is active. **Note:** Parameter *o1-03 [Speed Display Unit Selection]* sets the units for this parameter.	8.00% (0.00 - 100.00%)	554
d1-27 (02C9) Expert	Motor 2 Speed Reference	V/f OLV CLV CLV/PM Sets the speed reference when you use an MFDI terminal set for *H1-xx = 16 [MFDI Function Selection = Motor 2 Selection]* to select motor 2. **Note:** If you do not set any MFDI terminals to *H1-xx = 16 or 116*, the keypad will not show this parameter.	0.00 Hz (0.00 - 200.00 Hz)	554
d1-28 (02CA)	Leveling Speed Detection Level	V/f OLV CLV CLV/PM Sets the speed reference level at which the drive detects leveling speed when *d1-18 = 0 or 3 [Speed Reference Selection Mode = Multi-speed Mode1 (d1-01 to 08) or Multi-speed Mode2 (d1-02 to 08)]*. If the selected speed reference is lower than this parameter, the drive uses the leveling speed as the speed reference. **Note:** If you set a value larger than *d1-29 [Inspection Speed Detection Level]*, the drive detects *oPE03 [Multi-Function Input Setting Err]*.	0.00% (0.00 - 100.00%)	555
d1-29 (02CB)	Inspection Speed Detection Level	V/f OLV CLV CLV/PM Sets the speed reference level at which the drive detects inspection speed when *d1-18 = 0 or 3 [Speed Reference Selection Mode = Multi-speed Mode1 (d1-01 to 08) or Multi-speed Mode2 (d1-02 to 08)]*. If the selected speed reference is between *d1-28 [Leveling Speed Detection Level]* and this parameter, the drive uses the inspection speed as the speed reference, and activates the inspection operation sequence.	0.00% (0.00 - 100.00%)	555

◆ d6: Field Forcing

No. (Hex.)	Name	Description	Default (Range)	Ref.
d6-03 (02A2) Expert	Field Forcing Selection	V/f OLV CLV CLV/PM Sets the field forcing function. 0 : Disabled 1 : Enabled	0 (0, 1)	555
d6-06 (02A5) Expert	Field Forcing Limit	V/f OLV CLV CLV/PM Sets the limit value for field forcing to increase the motor excitation current reference as a percentage of *E2-03 [Motor No-Load Current]*. Usually it is not necessary to change this setting.	400% (100 - 400%)	555

11.8 E: Motor Parameters

◆ E1: V/f Pattern for Motor 1

No. (Hex.)	Name	Description	Default (Range)	Ref.
E1-01 (0300)	Input AC Supply Voltage	V/f OLV CLV CLV/PM Sets the drive input voltage. **NOTICE** **Damage to Equipment** **Set *E1-01 [Input AC Supply Voltage]* to align with the drive input voltage (not motor voltage).** **If this parameter is incorrect, the protective functions of the drive will not operate correctly and it can cause damage to the drive.**	200 V Class: 200 V 400 V Class: 400 V (200 V Class: 155 - 255 V, 400 V Class: 310 - 510 V)	556
E1-03 (0302)	V/f Pattern Selection	V/f OLV CLV CLV/PM Sets the V/f pattern for the drive and motor. You can make a custom pattern. F : Custom **Note:** Set the correct V/f pattern for the application and operation area. An incorrect V/f pattern can decrease motor torque and increase current from overexcitation.	F (F)	557
E1-04 (0303)	Maximum Output Frequency	V/f OLV CLV CLV/PM Sets the maximum output frequency for the V/f pattern. **Note:** Parameter *o1-04 [V/f Pattern Display Unit]* sets the units for this parameter.	Determined by A1-02 (Determined by A1-02)	557
E1-05 (0304)	Maximum Output Voltage	V/f OLV CLV CLV/PM Sets the maximum output voltage for the V/f pattern.	190.0 V (200 V Class: 0.0 - 255.0 V, 400 V Class: 0.0 - 510.0 V)	557
E1-06 (0305)	Base Frequency	V/f OLV CLV CLV/PM Sets the base frequency for the V/f pattern. **Note:** Parameter *o1-04 [V/f Pattern Display Unit]* sets the units for this parameter.	Determined by A1-02 (0.0 - 200.0 Hz)	557
E1-07 (0306)	Mid Point A Frequency	V/f OLV CLV CLV/PM Sets a middle output frequency for the V/f pattern. **Note:** Parameter *o1-04 [V/f Pattern Display Unit]* sets the units for this parameter.	Determined by A1-02 (0.0 - 200.0 Hz)	557
E1-08 (0307)	Mid Point A Voltage	V/f OLV CLV CLV/PM Sets a middle output voltage for the V/f pattern.	Determined by A1-02 and o2-04 (200 V Class: 0.0 - 255.0 V, 400 V Class: 0.0 - 510.0 V)	558
E1-09 (0308)	Minimum Output Frequency	V/f OLV CLV CLV/PM Sets the minimum output frequency for the V/f pattern. **Note:** Parameter *o1-04 [V/f Pattern Display Unit]* sets the units for this parameter.	Determined by A1-02 (0.0 - 200.0 Hz)	558
E1-10 (0309)	Minimum Output Voltage	V/f OLV CLV CLV/PM Sets the minimum output voltage for the V/f pattern.	Determined by A1-02 (200 V Class: 0.0 - 255.0 V, 400 V Class: 0.0 - 510.0 V)	558
E1-11 (030A) Expert	Mid Point B Frequency	V/f OLV CLV CLV/PM Sets a middle output frequency for the V/f pattern. **Note:** Parameter *o1-04 [V/f Pattern Display Unit]* sets the units for this parameter.	0.0 Hz (0.0 - 200.0 Hz)	558
E1-12 (030B) Expert	Mid Point B Voltage	V/f OLV CLV CLV/PM Sets a middle point voltage for the V/f pattern.	0.0 V (200 V Class: 0.0 - 255.0 V, 400 V Class: 0.0 - 510.0 V)	558
E1-13 (030C) Expert	Base Voltage	V/f OLV CLV CLV/PM Sets the base voltage for the V/f pattern.	0.0 V (200 V Class: 0.0 - 255.0 V, 400 V Class: 0.0 - 510.0 V)	558

◆ E2: Motor Parameters

No. (Hex.)	Name	Description	Default (Range)	Ref.
E2-01 (030E)	Motor Rated Current (FLA)	V/f OLV CLV CLV/PM Sets the motor rated current in amps.	Determined by o2-04 (10% to 200% of the continuous rated output current)	559
E2-02 (030F)	Motor Rated Slip	V/f OLV CLV CLV/PM Sets motor rated slip.	Determined by o2-04 (0.000 - 20.000 Hz)	559
E2-03 (0310)	Motor No-Load Current	V/f OLV CLV CLV/PM Sets the no-load current for the motor in amps when operating at the rated frequency and the no-load voltage.	Determined by o2-04 (0.0 - E2-01)	559
E2-04 (0311)	Motor Pole Count	V/f OLV CLV CLV/PM Sets the number of motor poles. **Note:** • When *A1-02 = 0, 3 [Control Method Selection = V/f, CLV]*, the maximum value is 120. • When *A1-02 = 2 [OLV]*, the maximum value is 48.	4 (2 - 120)	559
E2-05 (0312)	Motor Line-to-Line Resistance	V/f OLV CLV CLV/PM Sets the line-to-line resistance for the motor stator windings.	Determined by o2-04 (0.000 - 65.000 Ω)	560
E2-06 (0313)	Motor Leakage Inductance	V/f OLV CLV CLV/PM Sets the voltage drop from motor leakage inductance when the motor is operating at the rated frequency and rated current. This value is a percentage of Motor Rated Voltage.	Determined by o2-04 (0.0 - 60.0%)	560
E2-07 (0314)	Motor Saturation Coefficient 1	V/f OLV CLV CLV/PM Sets the motor iron-core saturation coefficient at 50% of the magnetic flux.	0.50 (0.00 - 0.50)	560
E2-08 (0315)	Motor Saturation Coefficient 2	V/f OLV CLV CLV/PM Sets the motor iron-core saturation coefficient at 75% of the magnetic flux.	0.75 (E2-07 - 0.75)	560
E2-09 (0316) Expert	Motor Mechanical Loss	V/f OLV CLV CLV/PM Sets the mechanical loss of the motor. This parameter is set as a percentage of *E2-11 [Motor Rated Power]*. Usually it is not necessary to change this setting.	0.0% (0.0 - 10.0%)	560
E2-10 (0317)	Motor Iron Loss	V/f OLV CLV CLV/PM Sets the motor iron loss.	Determined by o2-04 (0 - 65535 W)	560
E2-11 (0318)	Motor Rated Power	V/f OLV CLV CLV/PM Sets the motor rated output in the units from *o1-58 [Motor Power Unit Selection]*.	Determined by o2-04 (0.00 - 650.00 kW)	561

◆ E3: V/f Pattern for Motor 2

No. (Hex.)	Name	Description	Default (Range)	Ref.
E3-04 (031A) Expert	Motor 2 Maximum Output Frequency	V/f OLV CLV CLV/PM Set the maximum output frequency for the motor 2 V/f pattern. **Note:** Parameter *o1-04 [V/f Pattern Display Unit]* sets the units for this parameter.	50.0 Hz (10.0 - 200.0 Hz)	561
E3-05 (031B) Expert	Motor 2 Maximum Output Voltage	V/f OLV CLV CLV/PM Sets the maximum output voltage for the motor 2 V/f pattern.	190.0 V (200 V Class: 0.0 - 255.0 V, 400 V Class: 0.0 - 510.0 V)	561
E3-06 (031C) Expert	Motor 2 Base Frequency	V/f OLV CLV CLV/PM Sets the base frequency for the motor 2 V/f pattern. **Note:** Parameter *o1-04 [V/f Pattern Display Unit]* sets the units for this parameter.	50.0 Hz (0.0 - E3-04)	562
E3-07 (031D) Expert	Motor 2 Mid Point A Frequency	V/f OLV CLV CLV/PM Sets a middle output frequency for the motor 2 V/f pattern. **Note:** Parameter *o1-04 [V/f Pattern Display Unit]* sets the units for this parameter.	2.5 Hz (0.0 - 200.0 Hz)	562
E3-08 (031E) Expert	Motor 2 Mid Point A Voltage	V/f OLV CLV CLV/PM Sets a middle output voltage for the motor 2 V/f pattern.	14.0 V (200 V Class: 0.0 - 255.0 V, 400 V Class: 0.0 - 510.0 V)	562

No. (Hex.)	Name	Description	Default (Range)	Ref.
E3-09 (031F) Expert	Motor 2 Minimum Output Frequency	V/f OLV CLV CLV/PM Sets the minimum output frequency for the motor 2 V/f pattern. **Note:** Parameter *o1-04 [V/f Pattern Display Unit]* sets the units for this parameter.	1.3 Hz (0.0 - 200.0 Hz)	562
E3-10 (0320)	Motor 2 Minimum Output Voltage	V/f OLV CLV CLV/PM Sets the minimum output voltage for the motor 2 V/f pattern.	7.0 V (200 V Class: 0.0 - 255.0 V, 400 V Class: 0.0 - 510.0 V)	562

◆ E4: Motor 2 Parameters

No. (Hex.)	Name	Description	Default (Range)	Ref.
E4-01 (0321) Expert	Motor 2 Rated Current	V/f OLV CLV CLV/PM Sets the motor rated current for motor 2 in amps.	Determined by o2-04 (10% to 200% of the continuous rated output current)	562
E4-02 (0322) Expert	Motor 2 Rated Slip	V/f OLV CLV CLV/PM Sets the motor rated slip for motor 2.	Determined by o2-04 (0.000 - 20.000 Hz)	563
E4-03 (0323) Expert	Motor 2 Rated No-Load Current	V/f OLV CLV CLV/PM Sets the no-load current for motor 2 in amps when operating at the rated frequency and the no-load voltage.	Determined by o2-04 (0.0 - E4-01)	563
E4-04 (0324) Expert	Motor 2 Motor Poles	V/f OLV CLV CLV/PM Sets the number of poles for motor 2.	4 (2 - 120)	563
E4-05 (0325) Expert	Motor 2 Line-to-Line Resistance	V/f OLV CLV CLV/PM Sets the line-to-line resistance for the motor 2 stator windings.	Determined by o2-04 (0.000 - 65.000 Ω)	563
E4-06 (0326) Expert	Motor 2 Leakage Inductance	V/f OLV CLV CLV/PM Sets the voltage drop from motor 2 leakage inductance as a percentage of Motor Rated Voltage when motor 2 operates at the rated frequency and rated current.	Determined by o2-04 (0.0 - 60.0%)	564

◆ E5: PM Motor Settings

No. (Hex.)	Name	Description	Default (Range)	Ref.
E5-02 (032A)	PM Motor Rated Power	V/f OLV CLV CLV/PM Sets the PM motor rated output in the units set in *o1-58 [Motor Power Unit Selection]*.	Determined by o2-04 (0.10 - 650.00 kW)	564
E5-03 (032B)	PM Motor Rated Current (FLA)	V/f OLV CLV CLV/PM Sets the PM motor rated current (FLA).	Determined by o2-04 (10% to 200% of the continuous rated output current)	564
E5-04 (032C)	PM Motor Pole Count	V/f OLV CLV CLV/PM Sets the number of PM motor poles. **Note:** When you connect a PG-E3 option, the maximum value for this parameter is 48.	12 (2 - 120)	564
E5-05 (032D)	PM Motor Resistance (ohms/phase)	V/f OLV CLV CLV/PM Sets the resistance per phase of a PM motor. Set 50% of the line-to-line resistance.	Determined by o2-04 (0.000 - 65.000 Ω)	565
E5-06 (032E)	PM d-axis Inductance (mH/phase)	V/f OLV CLV CLV/PM Sets the PM motor d-axis inductance.	Determined by o2-04 (0.00 - 600.00 mH)	565
E5-07 (032F)	PM q-axis Inductance (mH/phase)	V/f OLV CLV CLV/PM Sets the PM motor q-axis inductance.	Determined by o2-04 (0.00 - 600.00 mH)	565
E5-09 (0331)	PM Back-EMF Vpeak (mV/(rad/s))	V/f OLV CLV CLV/PM Sets the peak value of PM motor induced voltage.	Determined by o2-04 (0.0 - 6500.0 mV/(rad/s))	565
E5-11 (0333)	Encoder Z-Pulse Offset	V/f OLV CLV CLV/PM Sets the encoder Z-pulse offset.	0.0° (-180.0 - +180.0°)	565

No. (Hex.)	Name	Description	Default (Range)	Ref.
E5-24 (0353)	PM Back-EMF L-L Vrms (mV/rpm)	V/f OLV CLV CLV/PM Sets the RMS value for PM motor line voltage.	0.0 (0.0 - 6500.0 mV/min^{-1})	566
E5-56 (1BF9)	Back-EMF Setting Units Selection	V/f OLV CLV CLV/PM Sets the setting units for *E5-09 [PM Back-EMF Vpeak (mV/(rad/s))]*, *E5-24 [PM Back-EMF L-L Vrms (mV/rpm)]*. **Note:** The lower the motor rated speed is compared to the motor rated capacity, the larger the induced voltage constant becomes. If the tuning result is more than the upper limit of the induced voltage constant, you can change this parameter to extend the upper limit of the induced voltage constant. 0 : With decimal point 1 : No decimal point	0 (0, 1)	566

11.9 F: Options

◆ F1: Encoder Option Setup

No. (Hex.)	Name	Description	Default (Range)	Ref.
F1-01 (0380)	Encoder 1 Pulse Count (PPR)	V/f OLV CLV CLV/PM Sets the number of output pulses for each motor revolution. **Note:** The default setting and setting range change when *A1-02 [Control Method Selection]* changes: • When *A1-02 = 3 [CLV]*, the default setting is 1024, and the setting range is 1 ppr to 60000 ppr. • When *A1-02 = 7 [CLV/PM]*, the default setting is 2048, and the setting range is 1 ppr to 20000 ppr.	Determined by A1-02 (Determined by A1-02)	568
F1-02 (0381) Expert	Encoder Signal Loss Detect Sel	V/f OLV CLV CLV/PM Sets the method to stop the motor or let the motor continue operating when the drive detects *PGo [Encoder (PG) Feedback Loss]*. 0 : Ramp to Stop 1 : Coast to Stop 2 : Emergency Stop (Use C1-09) 3 : Alarm Only	1 (0 - 3)	568
F1-03 (0382) Expert	Overspeed Detection Selection	V/f OLV CLV CLV/PM Sets the method to stop the motor or let the motor continue operating when the drive detects *oS [Overspeed]*. 0 : Ramp to Stop 1 : Coast to Stop 2 : Emergency Stop (Use C1-09) 3 : Alarm Only	1 (0 - 3)	568
F1-04 (0383) Expert	Speed Deviation Detection Select	V/f OLV CLV CLV/PM Sets the method to stop the motor or let the motor continue operating when the drive detects *dEv [Speed Deviation]*. **Note:** The default setting changes when *A1-02 [Control Method Selection]* changes: • When *A1-02 = 3 [CLV]*, the default setting is 3. • When *A1-02 = 7 [CLV/PM]*, the default setting is 1. 0 : Ramp to Stop 1 : Coast to Stop 2 : Emergency Stop (Use C1-09) 3 : Alarm Only	Determined by A1-02 (0 - 3)	569
F1-05 (0384)	Encoder 1 Rotation Selection	V/f OLV CLV CLV/PM Sets the output sequence for the A and B pulses from the encoder, assuming that the motor is operating in the up direction. **Note:** The default setting changes when *A1-02 [Control Method Selection]* changes: • When *A1-02 = 3 [CLV]*, the default setting is 0. • When *A1-02 = 7 [CLV/PM]*, the default setting is 1. 0 : Pulse A leads in Up Direction 1 : Pulse B leads in Up Direction	Determined by A1-02 (0, 1)	569
F1-06 (0385) Expert	Encoder 1 Pulse Monitor Scaling	V/f OLV CLV CLV/PM Sets the ratio between the pulse input and the pulse output of the encoder as a 3-digit number. The first digit is the numerator and the second and third digits are the denominator. The dividing ratio = (1 + x)/yz when the setting value is a 3-digit value (xyz).	001 (001 - 032, 102 - 132 (1 - 1/32))	569
F1-08 (0387) Expert	Overspeed Detection Level	V/f OLV CLV CLV/PM Sets the detection level of *oS [Overspeed]* as a percentage of *E1-04 [Maximum Output Frequency]*.	115% (0 - 120%)	570
F1-09 (0388) Expert	Overspeed Detection Delay Time	V/f OLV CLV CLV/PM Sets the length of time that the speed feedback must be more than the *F1-08* level to cause *oS [Overspeed]*.	0.0 s (0.0 - 2.0 s)	570
F1-10 (0389) Expert	Speed Deviation Detection Level	V/f OLV CLV CLV/PM Sets the detection level of *dEv [Speed Deviation]* as a percentage of *E1-04 [Maximum Output Frequency]*.	10% (0 - 50%)	570
F1-11 (038A) Expert	Speed Deviation Detect DelayTime	V/f OLV CLV CLV/PM Sets the length of time that the difference between the speed reference and speed feedback must be more than the level in *F1-10* to cause *dEv [Speed Deviation]*.	0.5 s (0.0 - 10.0 s)	570
F1-14 (038D) Expert	Encoder Open-Circuit Detect Time	V/f OLV CLV CLV/PM Sets the length of time that the drive must not receive a pulse signal to cause *PGo [Encoder (PG) Feedback Loss]*.	2.0 s (0.0 - 10.0 s)	570

No. (Hex.)	Name	Description	Default (Range)	Ref.
F1-18 (03AD) Expert	Deviation 3 Detection Selection	V/f OLV CLV **CLV/PM** Sets the number of rotations necessary to detect conditions that invert the torque reference and rate of acceleration and cause *dv3 [Inversion Detection]*.	10 (0 - 10)	570
F1-19 (03AE) Expert	Deviation 4 Detection Selection	V/f OLV CLV **CLV/PM** Sets the number of pulses necessary to cause *dv4 [Inversion Prevention Detection]*.	128 (0 - 5000)	571
F1-20 (03B4)	Encoder 1 PCB Disconnect Detect	V/f OLV **CLV** **CLV/PM** Sets the function that enables and disables detection of a disconnected encoder connection cable to cause *PGoH [Encoder (PG) Hardware Fault]*. 0 : Disabled 1 : Enabled	1 (0, 1)	571
F1-29 (03BF) Expert	dEV Detection Condition Select	V/f OLV CLV **CLV/PM** Sets when *dEv [Speed Deviation]* detection is active. 0 : @ Ref=SFS=MtrSpd 1 : @ Ref=SFS Output 2 : Always during Run	2 (0 - 2)	571
F1-48 (03A6) Expert	Detect Speed Filter	V/f OLV CLV **CLV/PM** Sets the function to filter the absolute encoder detection speed. Usually it is not necessary to change this setting. **Note:** This parameter is disabled when set to 0.	4 (0 - 6)	572
F1-50 (03D2)	PG-F3 Option Encoder Type	V/f OLV CLV **CLV/PM** Sets the type of encoder connected to the PG-F3 option. 0 : EnDat Sin/Cos 1 : EnDat Serial Only 2 : HIPERFACE	0 (0 - 2)	572
F1-51 (03D3) Expert	PG-F3 PGoH Detection Level	V/f OLV CLV **CLV/PM** The drive will detect *PGoH [Encoder (PG) Hardware Fault]* if the value of this parameter is smaller than the value of $\sqrt{\sin^2\theta + \cos^2\theta}$. **Note:** This function is enabled when *F1-20 = 1 [Encoder 1 PCB Disconnect Detect = Enabled]*.	80% (1 - 100%)	572
F1-52 (03D4) Expert	Serial Encoder Comm Speed	V/f OLV CLV **CLV/PM** Sets the communication speed between the PG-F3 option and the serial encoder. 0 : 1M/9600bps 1 : 500k/19200bps 2 : 1M/38400bps	0 (0 - 2)	572
F1-53 (02E0) Expert	Encoder EEPROM Access	V/f OLV CLV **CLV/PM** Sets the function to save drive parameters to and load them from the EEPROM of the encoder. **Note:** • You must use the keypad to set this parameter. • When *F1-50 ≠ 1 [PG-F3 Option Encoder Type ≠ EnDat Serial Only]*, the keypad will not show this parameter. • When you start up the elevator, set *F1-53 = 2* to load the saved drive parameters. • Encoder EEPROM Access does not save *E5-56 [Back-EMF Setting Units Selection]*. When you load parameter settings, set *E5-56* correctly. 0 : No Action 1 : Save (Drive → Encoder) 2 : Load (Encoder → Drive) 3 : Verify	0 (0 - 3)	572
F1-55 (02E2) Expert	Encoder A-Phase Offset Voltage	V/f OLV CLV **CLV/PM** Sets the A-phase offset voltage.	2.500 V (1.500 - 3.500 V)	573
F1-56 (02E3) Expert	Encoder A-Phase Gain	V/f OLV CLV **CLV/PM** Sets the A-phase gain.	1.090 V (0.500 - 1.750 V)	573
F1-57 (02E4) Expert	Encoder B-Phase Offset Voltage	V/f OLV CLV **CLV/PM** Sets the B-phase offset voltage.	2.500 V (1.500 - 3.500 V)	573
F1-58 (02E5) Expert	Encoder B-Phase Gain	V/f OLV CLV **CLV/PM** Sets the B-phase gain.	1.090 V (0.500 - 1.750 V)	573
F1-59 (02E6) Expert	Encoder C-Phase Offset Voltage	V/f OLV CLV **CLV/PM** Sets the C-phase offset voltage.	2.500 V (1.500 - 3.500 V)	574

No. (Hex.)	Name	Description	Default (Range)	Ref.
F1-60 (02E7) Expert	Encoder C-Phase Gain	V/f OLV CLV CLV/PM Sets the C-phase gain.	1.090 V (0.500 - 1.750 V)	574
F1-61 (02E8) Expert	Encoder D-Phase Offset Voltage	V/f OLV CLV CLV/PM Sets the D-phase offset voltage.	2.500 V (1.500 - 3.500 V)	574
F1-62 (02E9) Expert	Encoder D-Phase Gain	V/f OLV CLV CLV/PM Sets the D-phase gain.	1.090 V (0.500 - 1.750 V)	574
F1-63 (02DF) Expert	PG-E3 R-Phase Select	V/f OLV CLV CLV/PM Sets the function to enable or disable the R-phase when you use a PG-E3 option card. 0 : Disabled 1 : Enabled	0 (0, 1)	574
F1-66 (0B9A) Expert	Encoder Adjustment Value 1	V/f OLV CLV CLV/PM Sets encoder offset 1 for the PG-E3 option card. When you do Auto-Tuning, the drive automatically sets this parameter.	0 (0 - FFFF)	574
F1-67 (0B9B) Expert	Encoder Adjustment Value 2	V/f OLV CLV CLV/PM Sets encoder offset 2 for the PG-E3 option card. When you do Auto-Tuning, the drive automatically sets this parameter.	0 (0 - FFFF)	574
F1-68 (0B9C) Expert	Encoder Adjustment Value 3	V/f OLV CLV CLV/PM Sets encoder offset 3 for the PG-E3 option card. When you do Auto-Tuning, the drive automatically sets this parameter.	0 (0 - FFFF)	575
F1-69 (0B9D) Expert	Encoder Adjustment Value 4	V/f OLV CLV CLV/PM Sets encoder offset 4 for the PG-E3 option card. This parameter is automatically set by the execution of Auto-Tuning of PG-E3 encoder characteristics.	0 (0 - FFFF)	575
F1-70 (0B9E) Expert	Encoder Adjustment Value 5	V/f OLV CLV CLV/PM Sets encoder offset 5 for the PG-E3 option card. When you do Auto-Tuning, the drive automatically sets this parameter.	0 (0 - FFFF)	575
F1-71 (0B9F) Expert	Encoder Adjustment Value 6	V/f OLV CLV CLV/PM Sets encoder offset 6 for the PG-E3 option card. When you do Auto-Tuning, the drive automatically sets this parameter.	0 (0 - FFFF)	575
F1-72 (0BA0) Expert	Encoder Adjustment Value 7	V/f OLV CLV CLV/PM Sets encoder offset 7 for the PG-E3 option card. When you do Auto-Tuning, the drive automatically sets this parameter.	0 (0 - FFFF)	575
F1-73 (0BA1) Expert	Encoder Adjustment Value 8	V/f OLV CLV CLV/PM Sets encoder offset 8 for the PG-E3 option card. When you do Auto-Tuning, the drive automatically sets this parameter.	0 (0 - FFFF)	575
F1-74 (0BA2) Expert	Encoder Adjustment Value 9	V/f OLV CLV CLV/PM Sets encoder offset 9 for the PG-E3 option card. When you do Auto-Tuning, the drive automatically sets this parameter.	0 (0 - FFFF)	575
F1-75 (BA30) Expert	Encoder Adjustment Value 10	V/f OLV CLV CLV/PM Sets encoder offset 10 for the PG-E3 option card. When you do Auto-Tuning, the drive automatically sets this parameter.	0 (0 - FFFF)	575
F1-76 (0BA4) Expert	Encoder Adjustment Value 11	V/f OLV CLV CLV/PM Sets encoder offset 11 for the PG-E3 option card. When you do Auto-Tuning, the drive automatically sets this parameter.	0 (0 - FFFF)	576
F1-77 (0BA5) Expert	Encoder Adjustment Value 12	V/f OLV CLV CLV/PM Sets encoder offset 12 for the PG-E3 option card. When you do Auto-Tuning, the drive automatically sets this parameter.	0 (0 - FFFF)	576
F1-78 (0BA6) Expert	Encoder Adjustment Value 13	V/f OLV CLV CLV/PM Sets encoder offset 13 for the PG-E3 option card. When you do Auto-Tuning, the drive automatically sets this parameter.	0 (0 - FFFF)	576
F1-79 (0BA7) Expert	Encoder Adjustment Value 14	V/f OLV CLV CLV/PM Sets encoder offset 14 for the PG-E3 option card. When you do Auto-Tuning, the drive automatically sets this parameter.	0 (0 - FFFF)	576
F1-80 (0BA8) Expert	Encoder Adjustment Value 15	V/f OLV CLV CLV/PM Sets encoder offset 15 for the PG-E3 option card. When you do Auto-Tuning, the drive automatically sets this parameter.	0 (0 - FFFF)	576
F1-81 (0BA9) Expert	Encoder Adjustment Value 16	V/f OLV CLV CLV/PM Sets encoder offset 16 for the PG-E3 option card. When you do Auto-Tuning, the drive automatically sets this parameter.	0 (0 - FFFF)	576

◆ F3: Digital Input Option

No. (Hex.)	Name	Description	Default (Range)	Ref.
F3-01 (0390) Expert	Digital Input Function Selection	V/f OLV CLV CLV/PM Sets the data format of digital input signals. This parameter is enabled when *o1-03 = 0 or 1 [Speed Display Unit Selection = 0.01 Hz or 0.01% (100% = E1-04)]*. **Note:** When *o1-03 = 2 [Revolutions Per Minute (RPM)]* or *3 [User Units]*, the input signal type is BCD. The *o1-03* value sets the setting units. 0 : BCD, 1% units 1 : BCD, 0.1% units 2 : BCD, 0.01% units 3 : BCD, 1 Hz units 4 : BCD, 0.1 Hz units 5 : BCD, 0.01 Hz units 6 : BCD (5-digit), 0.01 Hz 7 : Binary input 8 : Multi-Function Digital Input	0 (0 - 8)	577
F3-03 (03B9) Expert	Digital Input Data Length Select	V/f OLV CLV CLV/PM Sets the number of bits to set the speed reference with *DI-A3*. 0 : 8-bit 1 : 12-bit 2 : 16-bit	2 (0 - 2)	577
F3-10 (0BE3) Expert	Terminal D0 Function Selection	V/f OLV CLV CLV/PM Sets the function for terminal D0 of the DI-A3 option when *F3-01 = 8 [Digital Input Function Selection = Multi-Function Digital Input]*. **Note:** You cannot set *40 [Up Command]* and *41 [Down Command]* to this parameter.	F (1 - 1FF)	578
F3-11 (0BE4) Expert	Terminal D1 Function Selection	V/f OLV CLV CLV/PM Sets the function for terminal D1 of the DI-A3 option when *F3-01 = 8 [Digital Input Function Selection = Multi-Function Digital Input]*. **Note:** You cannot set *40 [Up Command]* and *41 [Down Command]* to this parameter.	F (1 - 1FF)	578
F3-12 (0BE5) Expert	Terminal D2 Function Selection	V/f OLV CLV CLV/PM Sets the function for terminal D2 of the DI-A3 option when *F3-01 = 8 [Digital Input Function Selection = Multi-Function Digital Input]*. **Note:** You cannot set *40 [Up Command]* and *41 [Down Command]* to this parameter.	F (1 - 1FF)	579
F3-13 (0BE6) Expert	Terminal D3 Function Selection	V/f OLV CLV CLV/PM Sets the function for terminal D3 of the DI-A3 option when *F3-01 = 8 [Digital Input Function Selection = Multi-Function Digital Input]*. **Note:** You cannot set *40 [Up Command]* and *41 [Down Command]* to this parameter.	F (1 - 1FF)	579
F3-14 (0BE7) Expert	Terminal D4 Function Selection	V/f OLV CLV CLV/PM Sets the function for terminal D4 of the DI-A3 option when *F3-01 = 8 [Digital Input Function Selection = Multi-Function Digital Input]*. **Note:** You cannot set *40 [Up Command]* and *41 [Down Command]* to this parameter.	F (1 - 1FF)	579
F3-15 (0BE8) Expert	Terminal D5 Function Selection	V/f OLV CLV CLV/PM Sets the function for terminal D5 of the DI-A3 option when *F3-01 = 8 [Digital Input Function Selection = Multi-Function Digital Input]*. **Note:** You cannot set *40 [Up Command]* and *41 [Down Command]* to this parameter.	F (1 - 1FF)	579
F3-16 (0BE9) Expert	Terminal D6 Function Selection	V/f OLV CLV CLV/PM Sets the function for terminal D6 of the DI-A3 option when *F3-01 = 8 [Digital Input Function Selection = Multi-Function Digital Input]*. **Note:** You cannot set *40 [Up Command]* and *41 [Down Command]* to this parameter.	F (1 - 1FF)	579
F3-17 (0BEA) Expert	Terminal D7 Function Selection	V/f OLV CLV CLV/PM Sets the function for terminal D7 of the DI-A3 option when *F3-01 = 8 [Digital Input Function Selection = Multi-Function Digital Input]*. **Note:** You cannot set *40 [Up Command]* and *41 [Down Command]* to this parameter.	F (1 - 1FF)	579
F3-18 (0BEB) Expert	Terminal D8 Function Selection	V/f OLV CLV CLV/PM Sets the function for terminal D8 of the DI-A3 option when *F3-01 = 8 [Digital Input Function Selection = Multi-Function Digital Input]*. **Note:** You cannot set *40 [Up Command]* and *41 [Down Command]* to this parameter.	F (1 - 1FF)	580

No. (Hex.)	Name	Description	Default (Range)	Ref.
F3-19 (0BEC) Expert	Terminal D9 Function Selection	V/f OLV CLV CLV/PM Sets the function for terminal D9 of the DI-A3 option when *F3-01 = 8 [Digital Input Function Selection = Multi-Function Digital Input]*. **Note:** You cannot set *40 [Up Command]* and *41 [Down Command]* to this parameter.	F (1 - 1FF)	580
F3-20 (0BED) Expert	Terminal DA Function Selection	V/f OLV CLV CLV/PM Sets the function for terminal DA of the DI-A3 option when *F3-01 = 8 [Digital Input Function Selection = Multi-Function Digital Input]*. **Note:** You cannot set *40 [Up Command]* and *41 [Down Command]* to this parameter.	F (1 - 1FF)	580
F3-21 (0BEE) Expert	Terminal DB Function Selection	V/f OLV CLV CLV/PM Sets the function for terminal DB of the DI-A3 option when *F3-01 = 8 [Digital Input Function Selection = Multi-Function Digital Input]*. **Note:** You cannot set *40 [Up Command]* and *41 [Down Command]* to this parameter.	F (1 - 1FF)	580
F3-22 (0BEF) Expert	Terminal DC Function Selection	V/f OLV CLV CLV/PM Sets the function for terminal DC of the DI-A3 option when *F3-01 = 8 [Digital Input Function Selection = Multi-Function Digital Input]*. **Note:** You cannot set *40 [Up Command]* and *41 [Down Command]* to this parameter.	F (1 - 1FF)	580
F3-23 (0BF0) Expert	Terminal DD Function Selection	V/f OLV CLV CLV/PM Sets the function for terminal DD of the DI-A3 option when *F3-01 = 8 [Digital Input Function Selection = Multi-Function Digital Input]*. **Note:** You cannot set *40 [Up Command]* and *41 [Down Command]* to this parameter.	F (1 - 1FF)	580
F3-24 (0BF1) Expert	Terminal DE Function Selection	V/f OLV CLV CLV/PM Sets the function for terminal DE of the DI-A3 option when *F3-01 = 8 [Digital Input Function Selection = Multi-Function Digital Input]*. **Note:** You cannot set *40 [Up Command]* and *41 [Down Command]* to this parameter.	F (1 - 1FF)	581
F3-25 (0BF2) Expert	Terminal DF Function Selection	V/f OLV CLV CLV/PM Sets the function for terminal DF of the DI-A3 option when *F3-01 = 8 [Digital Input Function Selection = Multi-Function Digital Input]*. **Note:** You cannot set *40 [Up Command]* and *41 [Down Command]* to this parameter.	F (1 - 1FF)	581

◆ F4: Analog Output Option

No. (Hex.)	Name	Description	Default (Range)	Ref.
F4-01 (0391) Expert	Terminal V1 Function Selection	V/f OLV CLV CLV/PM Sets the monitor signal output from terminal V1. Set the *x-xx* part of the *Ux-xx [Monitors]*. For example, set *F4-01 = 102* to monitor *U1-02 [Output Speed]*.	102 (000 - 999)	581
F4-02 (0392) RUN Expert	Terminal V1 Gain	V/f OLV CLV CLV/PM Sets the gain of the monitor signal that is sent from terminal V1. Set the analog signal output level from terminal V1 at 10 V or 20 mA as 100% when an output for monitoring items is 100%.	100.0% (-999.9 - +999.9%)	582
F4-03 (0393) Expert	Terminal V2 Function Selection	V/f OLV CLV CLV/PM Sets the monitor signal output from terminal V2. Set the *x-xx* part of the *Ux-xx [Monitors]*. For example, set *F4-03 = 103* to monitor *U1-03 [Output Current]*.	103 (000 - 999)	582
F4-04 (0394) RUN Expert	Terminal V2 Gain	V/f OLV CLV CLV/PM Sets the gain of the monitor signal that is sent from terminal V2. Set the analog signal output level from terminal V2 at 10 V or 20 mA as 100% when an output for monitoring items is 100%.	50.0% (-999.9 - +999.9%)	582
F4-05 (0395) RUN Expert	Terminal V1 Bias	V/f OLV CLV CLV/PM Sets the bias of the monitor signal that is sent from terminal V1. When an output for monitoring items is 0%, this parameter sets the analog signal output level from terminal V1 as a percentage of 10 V or 20 mA.	0.0% (-999.9 - +999.9%)	582
F4-06 (0396) RUN Expert	Terminal V2 Bias	V/f OLV CLV CLV/PM Sets the bias of the monitor signal that is sent from terminal V2. When an output for monitoring items is 0%, this parameter sets the analog signal output level from terminal V2 as a percentage of 10 V or 20 mA.	0.0% (-999.9 - +999.9%)	583

No. (Hex.)	Name	Description	Default (Range)	Ref.
F4-07 (0397) Expert	Terminal V1 Signal Level	V/f OLV CLV CLV/PM Sets the output signal level for terminal V1. 0 : 0 to 10V 1 : -10 to 10V	1 (0, 1)	583
F4-08 (0398) Expert	Terminal V2 Signal Level	V/f OLV CLV CLV/PM Sets the output signal level for terminal V2. 0 : 0 to 10V 1 : -10 to 10V	1 (0, 1)	583

◆ F5: Digital Output Option

No. (Hex.)	Name	Description	Default (Range)	Ref.
F5-01 (0399) Expert	Terminal P1-PC Function Select	V/f OLV CLV CLV/PM Sets the function of terminal P1-PC on the DO-A3 option. Set *F5-09 = 2 [DO-A3 Output Mode Selection = Programmable (F5-01 to F5-08)]* to enable this function.	0 (0 - 1FF)	585
F5-02 (039A) Expert	Terminal P2-PC Function Select	V/f OLV CLV CLV/PM Sets the function of terminal P2-PC on the DO-A3 option. Set *F5-09 = 2 [DO-A3 Output Mode Selection = Programmable (F5-01 to F5-08)]* to enable this function.	1 (0 - 1FF)	585
F5-03 (039B) Expert	Terminal P3-PC Function Select	V/f OLV CLV CLV/PM Sets the function of terminal P3-PC on the DO-A3 option. Set *F5-09 = 2 [DO-A3 Output Mode Selection = Programmable (F5-01 to F5-08)]* to enable this function.	2 (0 - 1FF)	585
F5-04 (039C) Expert	Terminal P4-PC Function Select	V/f OLV CLV CLV/PM Sets the function of terminal P4-PC on the DO-A3 option. Set *F5-09 = 2 [DO-A3 Output Mode Selection = Programmable (F5-01 to F5-08)]* to enable this function.	4 (0 - 1FF)	585
F5-05 (039D) Expert	Terminal P5-PC Function Select	V/f OLV CLV CLV/PM Sets the function of terminal P5-PC on the DO-A3 option. Set *F5-09 = 2 [DO-A3 Output Mode Selection = Programmable (F5-01 to F5-08)]* to enable this function.	6 (0 - 1FF)	585
F5-06 (039E) Expert	Terminal P6-PC Function Select	V/f OLV CLV CLV/PM Sets the function of terminal P6-PC on the DO-A3 option. Set *F5-09 = 2 [DO-A3 Output Mode Selection = Programmable (F5-01 to F5-08)]* to enable this function.	37 (0 - 1FF)	585
F5-07 (039F) Expert	Terminal M1-M2 Function Select	V/f OLV CLV CLV/PM Sets the function of terminal M1-M2 on the DO-A3 option. Set *F5-09 = 2 [DO-A3 Output Mode Selection = Programmable (F5-01 to F5-08)]* to enable this function.	F (0 - 1FF)	585
F5-08 (03A0) Expert	Terminal M3-M4 Function Select	V/f OLV CLV CLV/PM Sets the function of terminal M3-M4 on the DO-A3 option. Set *F5-09 = 2 [DO-A3 Output Mode Selection = Programmable (F5-01 to F5-08)]* to enable this function.	F (0 - 1FF)	586
F5-09 (03A1) Expert	DO-A3 Output Mode Selection	V/f OLV CLV CLV/PM Sets the output mode of signals from the DO-A3 option. 0 : Predefined Individual Outputs 1 : Binary Output 2 : Programmable (F5-01 to F5-08)	0 (0 - 2)	586

◆ F6: Communication Options

No. (Hex.)	Name	Description	Default (Range)	Ref.
F6-01 (03A2) Expert	Communication Error Selection	V/f OLV CLV CLV/PM Sets the method to stop the motor or let the motor continue operating when the drive detects *bUS [Option Communication Error]*. 0 : Ramp to Stop 1 : Coast to Stop 2 : Emergency Stop (Use C1-09) 3 : Alarm Only	1 (0 - 3)	586
F6-02 (03A3) Expert	Comm External Fault (EF0) Detect	V/f OLV CLV CLV/PM Sets the conditions at which *EF0 [Option Card External Fault]* is detected. 0 : Always Detected 1 : Detected during RUN Only	0 (0, 1)	587

No. (Hex.)	Name	Description	Default (Range)	Ref.
F6-03 (03A4) Expert	Comm External Fault (EF0) Select	V/f OLV CLV CLV/PM Sets the method to stop the motor or let the motor continue operating when the drive detects an *EF0 [Option Card External Fault]*. 0 : Ramp to Stop 1 : Coast to Stop 2 : Emergency Stop (Use C1-09) 3 : Alarm Only	1 (0 - 3)	587
F6-04 (03A5) Expert	bUS Error Detection Time	V/f OLV CLV CLV/PM Sets the delay time for the drive to detect *bUS [Option Communication Error]*. **Note:** When you install an option card in the drive, the parameter value changes to 0.0 s.	2.0 s (0.0 - 5.0 s)	587
F6-06 (03A7) Expert	Torque Reference/Limit by Comm	V/f OLV CLV CLV/PM Sets the function that enables and disables the torque reference and torque limit received from the communication option. 0 : Disabled 1 : Enabled	0 (0, 1)	587
F6-08 (036A) Expert	Comm Parameter Reset @Initialize	V/f OLV CLV CLV/PM Sets the function to initialize *F6-xx parameters* when you use *A1-03 [Initialize Parameters]* to initialize the drive. 0 : No Reset - Parameters Retained 1 : Reset Back to Factory Default	0 (0, 1)	588
F6-15 (0B5B)	Comm. Option Parameters Reload	V/f OLV CLV CLV/PM Sets the update method when you change *F6-xx [Communication Options]*. 0 : Reload at Next Power Cycle 1 : Reload Now 2 : Cancel Reload Request	0 (0 - 2)	588
F6-35 (03D0) Expert	CANopen Node ID Selection	V/f OLV CLV CLV/PM Sets the node address for CANopen communication. Restart the drive after you change the parameter setting. **Note:** Set an address that is different than all other node addresses. Do not set this parameter to *0*.	0 (0 - 126)	588
F6-36 (03D1) Expert	CANopen Communication Speed	V/f OLV CLV CLV/PM Sets the CANopen communications speed. Restart the drive after you change this parameter setting. 0 : Auto-detection 1 : 10 kbps 2 : 20 kbps 3 : 50 kbps 4 : 125 kbps 5 : 250 kbps 6 : 500 kbps 7 : 800 kbps 8 : 1 Mbps	6 (0 - 8)	588

11.10 H: Terminal Functions

◆ H1: Digital Inputs

No. (Hex.)	Name	Description	Default (Range)	Ref.
H1-01 (0438) Expert	Terminal S1 Function Selection	V/f OLV CLV CLV/PM Sets the function for MFDI terminal S1.	40 (F, 40)	590
H1-02 (0439) Expert	Terminal S2 Function Selection	V/f OLV CLV CLV/PM Sets the function for MFDI terminal S2.	41 (F, 41)	590
H1-03 (0400)	Terminal S3 Function Selection	V/f OLV CLV CLV/PM Sets the function for MFDI terminal S3. **Note:** The drive default settings and functions set for terminal S3 change when the *d1-18 [Speed Reference Selection Mode]* setting changes: • When *d1-18 = 0 or 3 [Multi-speed Mode1 (d1-01 to 08) or Multi-speed Mode2 (d1-02 to 08)]*, the default setting is *24 [External Fault (NO-Always-Coast)]*. • When *d1-18 = 1, 2, or 4 [High speed has priority, Leveling speed has priority, or Smart Replacement]*, the default setting is *50 [Nominal Speed]*.	Determined by d1-18 (0 - 1FF)	590
H1-04 (0401)	Terminal S4 Function Selection	V/f OLV CLV CLV/PM Sets the function for MFDI terminal S4. **Note:** The drive default settings and functions set for terminal S4 change when the *d1-18 [Speed Reference Selection Mode]* setting changes: • When *d1-18 = 0 or 3 [Multi-speed Mode1 (d1-01 to 08) or Multi-speed Mode2 (d1-02 to 08)]*, the default setting is *14 [Fault Reset]*. • When *d1-18 = 1 or 2, [High speed has priority or Leveling speed has priority]*, the default setting is *54 [Inspection Operation]*. • When *d1-18 = 4 [Smart Replacement]*, the default setting is *F [Not Used]*.	Determined by d1-18 (0 - 1FF)	590
H1-05 (0402)	Terminal S5 Function Selection	V/f OLV CLV CLV/PM Sets the function for MFDI terminal S5. **Note:** The drive default settings and functions set for terminal S5 change when the *d1-18 [Speed Reference Selection Mode]* setting changes: • When *d1-18 = 0 or 3 [Multi-speed Mode1 (d1-01 to 08) or Multi-speed Mode2 (d1-02 to 08)]*, the default setting is *3 [Multi-Step Speed Reference 1]*. • When *d1-18 = 1 or 2, [High speed has priority or Leveling speed has priority]*, the default setting is *51 [Intermediate Speed]*. • When *d1-18 = 4 [Smart Replacement]*, the default setting is *F [Not Used]*.	Determined by d1-18 (0 - 1FF)	591
H1-06 (0403)	Terminal S6 Function Selection	V/f OLV CLV CLV/PM Sets the function for MFDI terminal S6. **Note:** The drive default settings and functions set for terminal S6 change when the *d1-18 [Speed Reference Selection Mode]* setting changes: • When *d1-18 = 0 or 3 [Multi-speed Mode1 (d1-01 to 08) or Multi-speed Mode2 (d1-02 to 08)]*, the default setting is *4 [Multi-Step Speed Reference 2]*. • When *d1-18 = 1, 2, or 4 [High speed has priority, Leveling speed has priority, or Smart Replacement]*, the default setting is *53 [Leveling Speed]*.	Determined by d1-18 (0 - 1FF)	591
H1-07 (0404)	Terminal S7 Function Selection	V/f OLV CLV CLV/PM Sets the function for MFDI terminal S7. **Note:** The drive default settings and functions set for terminal S7 change when the *d1-18 [Speed Reference Selection Mode]* setting changes: • When *d1-18 = 0 or 3 [Multi-speed Mode1 (d1-01 to 08) or Multi-speed Mode2 (d1-02 to 08)]*, the default setting is *5 [Multi-Step Speed Reference 3]*. • When *d1-18 = 1 or 2, [High speed has priority or Leveling speed has priority]*, the default setting is *F [Not Used]*. • When *d1-18 = 4 [Smart Replacement]*, the default setting is *BA [Landing Zone]*.	Determined by d1-18 (0 - 1FF)	591
H1-08 (0405)	Terminal S8 Function Selection	V/f OLV CLV CLV/PM Sets the function for MFDI terminal S8.	F (0 - 1FF)	591
H1-09 (0406)	Terminal S9 Function Selection	V/f OLV CLV CLV/PM Sets the function for MFDI terminal S9.	F (0 - 1FF)	591
H1-10 (0407)	Terminal S10 Function Selection	V/f OLV CLV CLV/PM Sets the function for MFDI terminal S10.	F (0 - 1FF)	592
H1-21 (0B70) Expert	Terminal S1 Function Select 2	V/f OLV CLV CLV/PM Sets the second function for MFDI terminal S1. **Note:** You cannot set *40 [Up Command]* and *41 [Down Command]* to this parameter.	F (0 - 1FF)	592

No. (Hex.)	Name	Description	Default (Range)	Ref.
H1-22 (0B71) Expert	Terminal S2 Function Select 2	V/f OLV CLV CLV/PM Sets the second function for MFDI terminal S2. **Note:** You cannot set *40 [Up Command]* and *41 [Down Command]* to this parameter.	F (0 - 1FF)	592
H1-23 (0B72) Expert	Terminal S3 Function Select 2	V/f OLV CLV CLV/PM Sets the second function for MFDI terminal S3. **Note:** You cannot set *40 [Up Command]* and *41 [Down Command]* to this parameter.	F (0 - 1FF)	592
H1-24 (0B73) Expert	Terminal S4 Function Select 2	V/f OLV CLV CLV/PM Sets the second function for MFDI terminal S4. **Note:** You cannot set *40 [Up Command]* and *41 [Down Command]* to this parameter.	F (0 - 1FF)	592
H1-25 (0B74) Expert	Terminal S5 Function Select 2	V/f OLV CLV CLV/PM Sets the second function for MFDI terminal S5. **Note:** You cannot set *40 [Up Command]* and *41 [Down Command]* to this parameter.	F (0 - 1FF)	593
H1-26 (0B75) Expert	Terminal S6 Function Select 2	V/f OLV CLV CLV/PM Sets the second function for MFDI terminal S6. **Note:** You cannot set *40 [Up Command]* and *41 [Down Command]* to this parameter.	F (0 - 1FF)	593
H1-27 (0B76) Expert	Terminal S7 Function Select 2	V/f OLV CLV CLV/PM Sets the second function for MFDI terminal S7. **Note:** You cannot set *40 [Up Command]* and *41 [Down Command]* to this parameter.	F (0 - 1FF)	593
H1-28 (0B77) Expert	Terminal S8 Function Select 2	V/f OLV CLV CLV/PM Sets the second function for MFDI terminal S8. **Note:** You cannot set *40 [Up Command]* and *41 [Down Command]* to this parameter.	F (0 - 1FF)	593
H1-29 (0B78) Expert	Terminal S9 Function Select 2	V/f OLV CLV CLV/PM Sets the second function for MFDI terminal S9. **Note:** You cannot set *40 [Up Command]* and *41 [Down Command]* to this parameter.	F (0 - 1FF)	593
H1-30 (0B79) Expert	Terminal S10 Function Select 2	V/f OLV CLV CLV/PM Sets the second function for MFDI terminal S10. **Note:** You cannot set *40 [Up Command]* and *41 [Down Command]* to this parameter.	F (0 - 1FF)	594

◆ H1-xx: MFDI Setting Values

Setting Value	Function	Description	Ref.
3	Multi-Step Speed Reference 1	V/f OLV CLV CLV/PM Uses speed references *d1-01 to d1-08* to set a multi-step speed reference.	594
4	Multi-Step Speed Reference 2	V/f OLV CLV CLV/PM Uses speed references *d1-01 to d1-08* to set a multi-step speed reference.	594
5	Multi-Step Speed Reference 3	V/f OLV CLV CLV/PM Uses speed references *d1-01 to d1-08* to set a multi-step speed reference.	594
6	Jog Reference Selection	V/f OLV CLV CLV/PM Sets the drive to use the JOG Frequency Reference (JOG command). When *b1-01 ≠ 1 [Speed Reference Selection 1 ≠ Analog Input]* and *d1-18 = 0 or 3 [Speed Reference Selection Mode = Multi-speed Mode1 (d1-01 to 08) or Multi-speed Mode2 (d1-02 to 08)]*, the JOG Frequency Reference (JOG command) can be used.	594
7	Accel/Decel Ramp Selection 1	V/f OLV CLV CLV/PM Sets the drive to use *Acceleration/Deceleration Ramp 1 [C1-01, C1-02]* or *Acceleration/Deceleration Ramp 2 [C1-03, C1-04]*.	595
8	Baseblock Command (N. O.)	V/f OLV CLV CLV/PM Sets the command that stops drive output and coasts the motor to stop when the input is ON. ON : Baseblock (drive output stop) OFF : Normal operation	595
9	Baseblock Command (N. C.)	V/f OLV CLV CLV/PM Sets the command that stops drive output and coasts the motor to stop when the input terminal is OFF. ON : Normal operation OFF : Baseblock (drive output stop)	595
F	Not Used	V/f OLV CLV CLV/PM Use this setting for unused terminals or to use terminals in through mode.	596

Setting Value	Function	Description	Ref.
14	Fault Reset	V/f OLV CLV CLV/PM Sets the command to reset the current fault when the Up/Down command is inactive. **Note:** The drive ignores the fault reset command when the Up/Down command is active. Remove the Up/Down command before you try to reset a fault.	596
15	Emergency Stop (N.O.)	V/f OLV CLV CLV/PM Sets the command to ramp to stop in the deceleration ramp set in *C1-09 [Emergency Stop Ramp]* when the input terminal is ON while the drive is operating.	596
16	Motor 2 Selection	V/f OLV CLV CLV/PM Sets the command for the drive to operate motor 1 or motor 2. Stop the motors before switching. ON : Selects motor 2 OFF : Selects motor 1	597
17	Emergency Stop (N.C.)	V/f OLV CLV CLV/PM Sets the command to ramp to stop in the deceleration ramp set in *C1-09 [Emergency Stop Ramp]* when the input terminal is ON while the drive is operating.	597
18	Timer Function	V/f OLV CLV CLV/PM Sets the command to start the timer function. Use this setting with *Timer Output [H2-xx = 12]*.	598
1A	Accel/Decel Ramp Selection 2	V/f OLV CLV CLV/PM Sets the drive to use *Acceleration/Deceleration Ramp 3 [C1-05, C1-06]* or *Acceleration/Deceleration Ramp 4 [C1-07, C1-08]*. Set this function and *H1-xx = 7 [Accel/Decel Ramp Selection 1]* together.	598
20	External Fault (NO-Always-Ramp)	V/f OLV CLV CLV/PM When the terminal activates, the drive ramps to stop in the selected deceleration time. Fault relay output terminal MA-MC turns ON, and MB-MC turns OFF. Stopped drives and running drives will detect external faults.	598
21	External Fault (NC-Always-Ramp)	V/f OLV CLV CLV/PM When the terminal deactivates, the drive ramps to stop in the selected deceleration time. Fault relay output terminal MA-MC turns ON, and MB-MC turns OFF. Stopped drives and running drives will detect external faults.	598
22	External Fault (NO-@Run-Ramp)	V/f OLV CLV CLV/PM When the terminal activates during run, the drive ramps to stop in the selected deceleration time. Fault relay output terminal MA-MC turns ON, and MB-MC turns OFF. Stopped drives will not detect external faults.	598
23	External Fault (NC-@Run-Ramp)	V/f OLV CLV CLV/PM When the terminal deactivates during run, the drive ramps to stop in the selected deceleration time. Fault relay output terminal MA-MC turns ON, and MB-MC turns OFF. Stopped drives will not detect external faults.	598
24	External Fault (NO-Always-Coast)	V/f OLV CLV CLV/PM When the terminal activates, the drive shuts off the output and the motor coasts to stop. Fault relay output terminal MA-MC turns ON, and MB-MC turns OFF. Stopped drives and running drives will detect external faults.	598
25	External Fault (NC-Always-Coast)	V/f OLV CLV CLV/PM When the terminal deactivates, the drive shuts off the output and the motor coasts to stop. Fault relay output terminal MA-MC turns ON, and MB-MC turns OFF. Stopped drives and running drives will detect external faults.	598
26	External Fault (NO-@Run-Coast)	V/f OLV CLV CLV/PM When the terminal activates during run, the drive shuts off the output and the motor coasts to stop. Fault relay output terminal MA-MC turns ON, and MB-MC turns OFF. Stopped drives will not detect external faults.	598
27	External Fault (NC-@Run-Coast)	V/f OLV CLV CLV/PM When the terminal deactivates during run, the drive shuts off the output and the motor coasts to stop. Fault relay output terminal MA-MC turns ON, and MB-MC turns OFF. Stopped drives will not detect external faults.	598
28	External Fault (NO-Always-FStop)	V/f OLV CLV CLV/PM When the terminal activates, the drive stops the motor in the deceleration ramp set to *C1-09 [Emergency Stop Ramp]*. Fault relay output terminal MA-MC turns ON, and MB-MC turns OFF. Stopped drives and running drives will detect external faults.	598
29	External Fault (NC-Always-FStop)	V/f OLV CLV CLV/PM When the terminal deactivates, the drive stops the motor in the deceleration ramp set to *C1-09 [Emergency Stop Ramp]*. Fault relay output terminal MA-MC turns ON, and MB-MC turns OFF. Stopped drives and running drives will detect external faults.	598
2A	External Fault (NO-@Run-FStop)	V/f OLV CLV CLV/PM When the terminal activates during run, the drive stops the motor in the deceleration ramp set to *C1-09 [Emergency Stop Ramp]*. Fault relay output terminal MA-MC turns ON, and MB-MC turns OFF. Stopped drives will not detect external faults.	598
2B	External Fault (NC-@Run-FStop)	V/f OLV CLV CLV/PM When the terminal deactivates during run, the drive stops the motor in the deceleration ramp set to *C1-09 [Emergency Stop Ramp]*. Fault relay output terminal MA-MC turns ON, and MB-MC turns OFF. Stopped drives will not detect external faults.	598
2C	External Fault (NO-Always-Alarm)	V/f OLV CLV CLV/PM When the terminal activates, the keypad shows *EFx [External Fault (Input Terminal Sx)]* and the output terminal set for *H2-xx = 10 [MFDO Function Selection = Alarm]* activates. The drive continues operation. Stopped drives and running drives will detect external faults.	598
2D	External Fault (NC-Always-Alarm)	V/f OLV CLV CLV/PM When the terminal deactivates, the keypad shows *EFx [External Fault (Input Terminal Sx)]* and the output terminal set for *H2-xx = 10 [MFDO Function Selection = Alarm]* activates. The drive continues operation. Stopped drives and running drives will detect external faults.	598

Setting Value	Function	Description	Ref.
2E	External Fault (NO-@Run-Alarm)	V/f OLV CLV CLV/PM When the terminal activates during run, the keypad shows *EFx [External Fault (Input Terminal Sx)]* and the output terminal set for *H2-xx = 10 [MFDO Function Selection = Alarm]* activates. The drive continues operation. Stopped drives will not detect external faults.	598
2F	External Fault (NC-@Run-Alarm)	V/f OLV CLV CLV/PM When the terminal deactivates during run, the keypad shows *EFx [External Fault (Input Terminal Sx)]* and the output terminal set for *H2-xx = 10 [MFDO Function Selection = Alarm]* activates. The drive continues operation. Stopped drives will not detect external faults.	598
30	Creep Cancel	V/f OLV CLV CLV/PM Sets the command to cancel the creep operation when the terminal is OFF. ON : The drive continues the creep operation. OFF : The drive cancels the creep operation (N.C.).	599
40 Expert	Up Command	V/f OLV CLV CLV/PM Sets the Up command for 2-wire sequence 1. Set this function and *H1-xx = 41 [Down Command]* together. ON : Upward operation OFF : Stop **Note:** • If you turn ON the Up command terminal and the Down command terminal, it will cause an *EF [Up/Down Command Input Error]* alarm and the motor will ramp to stop. • Initialize the drive with a 2-wire sequence to set the Up command to terminal S1.	599
41 Expert	Down Command	V/f OLV CLV CLV/PM Sets the Down command for 2-wire sequence 1. Set this function and *H1-xx = 40 [Up Command]* together. ON : Downward operation OFF : Stop **Note:** • If you turn ON the Up command terminal and the Down command terminal, it will cause an *EF [Up/Down Command Input Error]* alarm and the motor will ramp to stop. • Initialize the drive with a 2-wire sequence to set the Down command to terminal S2.	600
4B	Short Circuit MCFeedback (NO)	V/f OLV CLV CLV/PM Sets the command to detect that the motor does not have a short circuit when the terminal is ON. ON : The motor does not have a short circuit. OFF : The motor has a short circuit.	600
4C	Short Circuit MCFeedback (NC)	V/f OLV CLV CLV/PM Sets the command to detect that the motor does not have a short circuit when the terminal is OFF. ON : The motor has a short circuit. OFF : The motor does not have a short circuit.	600
50	Nominal Speed	V/f OLV CLV CLV/PM Sets the command to operate at the speed reference set in *d1-19 [Nominal Speed]* when the terminal is ON. **Note:** The operation conditions change when the *d1-18 [Speed Reference Selection Mode]* setting changes.	600
51	Intermediate Speed	V/f OLV CLV CLV/PM Sets the command to operate at the speed reference set in *d1-20 [Intermediate Speed 1]* when the terminal is ON. Set this function, *50 [Nominal Speed]*, and *52 [Releveling Speed]* together to switch between the speed references set in *d1-21 [Intermediate Speed 2]* and *d1-22 [Intermediate Speed 3]*. **Note:** The operation conditions change when the *d1-18 [Speed Reference Selection Mode]* setting changes.	600
52	Releveling Speed	V/f OLV CLV CLV/PM Sets the command to operate at the speed reference set in *d1-23 [Releveling Speed]* when the terminal is ON. **Note:** The operation conditions change when the *d1-18 [Speed Reference Selection Mode]* setting changes.	600
53	Leveling Speed	V/f OLV CLV CLV/PM Sets the command to operate at the speed reference set in *d1-26 [Leveling Speed]* when the terminal is ON. **Note:** The operation conditions change when the *d1-18 [Speed Reference Selection Mode]* setting changes.	601
54	Inspection Operation	V/f OLV CLV CLV/PM Sets the command to operate at the speed reference set in *d1-24 [Inspection Operation Speed]* when the terminal is ON.	601
55	Rescue Operation	V/f OLV CLV CLV/PM Sets the command to start the Rescue Operation when the terminal is ON.	601
56	Motor Contactor Feedback N.O.	V/f OLV CLV CLV/PM Sets the command to detect that the electromagnetic contactor is closed when the terminal is ON. ON : The electromagnetic contactor is closed (N.O.). OFF : The electromagnetic contactor is open.	601
57	High Speed Limit Up	V/f OLV CLV CLV/PM Sets a command to limit the speed of the elevator car in the up direction to the leveling speed when the terminal is ON.	601
58	High Speed Limit Down	V/f OLV CLV CLV/PM Sets a command to limit the speed of the elevator car in the down direction to the leveling speed when the terminal is ON.	601

Setting Value	Function	Description	Ref.
5A	Motor Contactor Feedback N.C.	V/f OLV CLV CLV/PM Sets the command to detect that the electromagnetic contactor is closed when the terminal is OFF. ON : The electromagnetic contactor is open. OFF : The electromagnetic contactor is closed (N.C.).	601
5B	Brake Feedback N.C.	V/f OLV CLV CLV/PM Sets the command to detect that the brake is released when the terminal is OFF. ON : The brake is applied. OFF : The brake is released (N.C.).	602
5C	Stop Distance Correction	V/f OLV CLV CLV/PM Sets the command to compensate the stopping distance to improve the landing accuracy when the terminal is ON.	602
5D	Brake Trq Req	V/f OLV CLV CLV/PM Sets the command to switch the drive operation from normal operation to the Brake Torque Check Mode when the terminal is ON. **Note:** You cannot set this function for *H1-21 [Terminal S1 Function Select 2]* to *H1-30 [Terminal S10 Function Select 2]*. ON : The drive requests to start the Brake Torque Check. OFF : The drive operates normally.	602
67	Communications Test Mode	V/f OLV CLV CLV/PM Sets the function for the drive to self-test RS-485 serial communications operation.	602
79	Brake Feedback N.O.	V/f OLV CLV CLV/PM Sets the command to detect that the brake is released when the terminal is ON. ON : The brake is released (N.O.). OFF : The brake is applied.	602
BA	Landing Zone	V/f OLV CLV CLV/PM Sets the command to deactivate all pending speed selections (speed reference = 0 Hz), and start the brake sequence after deceleration is complete. **Note:** You cannot use this function in these conditions: • When you select motor 2 while *d1-27 [Motor 2 Speed Reference] ≠ 0* • During Inspection Operation • During Rescue Operation • During Light Load Direction Search	602
BB	Standby	V/f OLV CLV CLV/PM Sets the command to activate the digital output from the MFDO terminal set for *H2-xx = 65 or 165 [Standby Output or !Standby Output]* to move on to Standby Mode when the terminal is ON. **Note:** When you use this function, also set *H2-xx = 65 or 165* for an MFDO terminal. If you do not set any MFDO terminals, the drive detects *oPE08 [Parameter Selection Error]*. ON : The drive moves on Standby Mode. OFF : The drive operates normally.	603
BC	Wake Up	V/f OLV CLV CLV/PM Sets the command to return the drive operation from the Standby Mode and deactivate the digital output from the MFDO terminal set for *H2-xx = 65 or 165 [Standby Output or !Standby Output]* when the terminal is ON. When the drive is not in Standby Mode, the drive will ignore this command. **Note:** You can set this function for *H1-21 [Terminal S1 Function Select 2]* to *H1-30 [Terminal S10 Function Select 2]*. ON : The drive returns from Standby Mode.	603
103	!Multi-Step Speed Reference 1	V/f OLV CLV CLV/PM Uses a combination of multi-step speed references 1, 2 and 3 (N.C.) to set *d1-01 to d1-08 [Multi-Step Speed Reference]*.	603
104	!Multi-Step Speed Reference 2	V/f OLV CLV CLV/PM Uses a combination of multi-step speed references 1, 2 and 3 (N.C.) to set *d1-01 to d1-08 [Multi-Step Speed Reference]*.	603
105	!Multi-Step Speed Reference 3	V/f OLV CLV CLV/PM Uses a combination of multi-step speed references 1, 2 and 3 (N.C.) to set *d1-01 to d1-08 [Multi-Step Speed Reference]*.	603
106	!Jog Reference Selection	V/f OLV CLV CLV/PM Sets the drive to use the JOG Frequency Reference (JOG command). You can use the JOG Frequency Reference (JOG command) when *b1-01 ≠ 1 [Speed Reference Selection 1 ≠ Analog Input]* and *d1-18 = 0 or 3 [Speed Reference Selection Mode = Multi-speed Mode1 (d1-01 to 08) or Multi-speed Mode2 (d1-02 to 08)]*.	603
107	!Accel/Decel Ramp Selection 1	V/f OLV CLV CLV/PM Sets the drive to use *Acceleration/Deceleration Ramp 1 [C1-01, C1-02]* or *Acceleration/Deceleration Ramp 2 [C1-03, C1-04]*.	603
114	!Fault Reset	V/f OLV CLV CLV/PM Sets the command to reset the current fault when the Up/Down command is inactive. **Note:** The drive ignores the fault reset command when the Up/Down command is active. Remove the Up/Down command before you try to reset a fault.	603

Setting Value	Function	Description	Ref.
116	!Motor 2 Selection	V/f OLV CLV CLV/PM Sets the command for the drive to operate motor 1 or motor 2. Stop the motors before switching. ON : Selects motor 1 OFF : Selects motor 2	603
118	!Timer Function	V/f OLV CLV CLV/PM Sets the command to start the timer function. Use this setting with *H2-xx = 112 [!Timer Output]*.	603
11A	!Accel/Decel Ramp Selection 2	V/f OLV CLV CLV/PM Sets the drive to use *C1-01 to C1-08 [Acceleration/Deceleration Ramps 1 to 4]*. Set this function and *H1-xx = 107 [!Accel/Decel Ramp Selection 1]* together.	603
130	!Creep Cancel	V/f OLV CLV CLV/PM Sets the command to cancel the creep operation when the terminal is ON. ON : The drive cancels the creep operation (N.O.). OFF : The drive continues the creep operation.	603
150	!Nominal Speed	V/f OLV CLV CLV/PM Sets the command to operate at the speed reference set in *d1-19 [Nominal Speed]* when the terminal is OFF. **Note:** The operation conditions change when the *d1-18 [Speed Reference Selection Mode]* setting changes.	603
151	!Intermediate Speed	V/f OLV CLV CLV/PM Sets the command to operate at the speed reference set in *d1-20 [Intermediate Speed 1]* when the terminal is OFF. Set this function, *150 [!Nominal Speed]*, and *152 [!Releveling Speed]* together to switch between the speed references set in *d1-21 [Intermediate Speed 2]* and *d1-22 [Intermediate Speed 3]*. **Note:** The operation conditions change when the *d1-18 [Speed Reference Selection Mode]* setting changes.	603
152	!Releveling Speed	V/f OLV CLV CLV/PM Sets the command to operate at the speed reference set in *d1-23 [Releveling Speed]* when the terminal is OFF. **Note:** The operation conditions change when the *d1-18 [Speed Reference Selection Mode]* setting changes.	603
153	!Leveling Speed	V/f OLV CLV CLV/PM Sets the command to operate at the speed reference set in *d1-26 [Leveling Speed]* when the terminal is ON. **Note:** The operation conditions change when the *d1-18 [Speed Reference Selection Mode]* setting changes.	603
154	!Inspection Operation	V/f OLV CLV CLV/PM Sets the command to operate at the speed reference set in *d1-24 [Inspection Operation Speed]* when the terminal is OFF.	603
155	!Rescue Operation	V/f OLV CLV CLV/PM Sets the command to start the Rescue Operation when the terminal is OFF.	603
157	!High Speed Limit Up	V/f OLV CLV CLV/PM Sets a command to limit the speed of the elevator car in the up direction to the leveling speed when the terminal is OFF.	603
158	!High Speed Limit Down	V/f OLV CLV CLV/PM Sets a command to limit the speed of the elevator car in the down direction to the leveling speed when the terminal is OFF.	603
15C	!Stop Distance Correction	V/f OLV CLV CLV/PM Sets the command to compensate the stopping distance to improve the landing accuracy when the terminal is OFF.	603
15D	!Brake Trq Req	V/f OLV CLV CLV/PM Sets the command to switch the drive operation from normal operation to the Brake Torque Check Mode when the terminal is OFF. **Note:** You cannot set this function for *H1-21 [Terminal S1 Function Select 2]* to *H1-30 [Terminal S10 Function Select 2]*. ON : The drive operates normally. OFF : The drive requests to start the Brake Torque Check.	603
167	!Communications Test Mode	V/f OLV CLV CLV/PM Set the function for the drive to self-test RS-485 serial communications operation.	603
1BA	!Landing Zone	V/f OLV CLV CLV/PM Sets the command to deactivate all pending speed selections (speed reference = 0 Hz), and start Brake Sequence after the deceleration is complete. **Note:** You cannot use this function in these conditions: • When you select a 2nd motor while *d1-27 [Motor 2 Speed Reference] ≠ 0* • During Inspection Operation • During Rescue Operation • During Light Load Direction Search	603

Setting Value	Function	Description	Ref.
1BB	!Standby	V/f OLV CLV CLV/PM Sets the command to activate the digital output from the MFDO terminal set for *H2-xx = 65 or 165 [Standby Output or !Standby Output]* to move on to Standby Mode when the terminal is OFF. **Note:** When you use this function, also set *H2-xx = 65 or 165* for an MFDO terminal. If you do not set any MFDO terminals, the drive detects *oPE08 [Parameter Selection Error]*. ON : The drive operates normally. OFF : The drive moves on to Standby Mode.	603
1BC	!Wake Up	V/f OLV CLV CLV/PM Sets the command to return the drive operation from Standby Mode and deactivate the digital output from the MFDO terminal set for *H2-xx = 65 or 165 [Standby Output or !Standby Output]* when the terminal is OFF. When the drive is not in Standby Mode, the drive will ignore this command. **Note:** You can set this function for *H1-21 [Terminal S1 Function Select 2]* to *H1-30 [Terminal S10 Function Select 2]*. OFF : The drive returns from Standby Mode.	603

◆ H2: Digital Outputs

No. (Hex.)	Name	Description	Default (Range)	Ref.
H2-01 (040B)	Term M1-M2 Function Selection	V/f OLV CLV CLV/PM Sets the function for MFDO terminal M1-M2. **Note:** When you do not use the terminal or when you use the terminal in through mode, set this parameter to *F [Not Used]*.	50 (0 - 1FF)	604
H2-02 (040C)	Term M3-M4 Function Selection	V/f OLV CLV CLV/PM Sets the function for MFDO terminal M3-M4. **Note:** • The default setting changes when *d1-18 [Speed Reference Selection Mode]* changes: –When *d1-18 ≠ 4 [Smart Replacement]*, the default function setting is *51 [Output Contactor Control]*. –When *d1-18 = 4*, the default function setting is *74 [Slow Down]*. • When you do not use the terminal or when you use the terminal in through mode, set this parameter to *F [Not Used]*.	51 (0 - 1FF)	604
H2-03 (040D)	Term M5-M6 Function Selection	V/f OLV CLV CLV/PM Sets the function for MFDO terminal M5-M6. **Note:** When you do not use the terminal or when you use the terminal in through mode, set this parameter to *F [Not Used]*.	6 (0 - 1FF)	605
H2-04 (040E)	Term P1-C1 Function Selection	V/f OLV CLV CLV/PM Sets the function for MFDO terminal P1-C1. **Note:** When you do not use the terminal or when you use the terminal in through mode, set this parameter to *F [Not Used]*.	37 (0 - 1FF)	605
H2-05 (040F)	Term P2-C2 Function Selection	V/f OLV CLV CLV/PM Sets the function for MFDO terminal P2-C2. **Note:** When you do not use the terminal or when you use the terminal in through mode, set this parameter to *F [Not Used]*.	F (0 - 1FF)	605

◆ H2-xx: MFDO Setting Values

Setting Value	Function	Description	Ref.
0	During Run	V/f OLV CLV CLV/PM The terminal activates when you input an Up/Down command and when the drive is outputting voltage. ON : Drive is running OFF : Drive is stopping	605
1	Zero Speed	V/f OLV CLV CLV/PM The terminal activates when the output speed < *E1-09 [Minimum Output Frequency] or S1-01 [Zero Speed Level at Stop]*. **Note:** Parameter *A1-02 [Control Method Selection]* selects which parameter is the reference. A1-02 Setting / Control Method Selection / Parameter Used as the Reference 0 / V/f / *E1-09* 2 / OLV / *E1-09* 3 / CLV / *S1-01* 7 / CLV/PM / *S1-01* ON : Output speed < value of *E1-09* or *S1-01*. OFF : Output speed ≥ value of *E1-09* or *S1-01*.	605
2	Speed Agree 1	V/f OLV CLV CLV/PM The terminal activates when the output speed is in the range of the speed reference ± *L4-02 [Speed Agree Detection Width]*. **Note:** • The detection function operates in the two motor rotation directions. • The drive outputs the motor speed status when *A1-02 = 3, 7 [Control Method Selection = CLV, CLV/PM]*. ON : The output speed is in the range of "speed reference ± *L4-02*". OFF : The output speed does not align with the speed reference although the drive is running.	606
3	User-Set Speed Agree 1	V/f OLV CLV CLV/PM The terminal activates when the output speed is in the range of *L4-01 [Speed Agree Detection Level]* ± *L4-02 [Speed Agree Detection Width]* and in the range of the speed reference ± *L4-02*. **Note:** • The detection function operates in the two motor rotation directions. The drive uses the *L4-01* value as the Up/Down detection level. • The drive outputs the motor speed status when *A1-02 = 3, 7 [Control Method Selection = CLV, CLV/PM]*. ON : The output speed is in the range of "*L4-01* ± *L4-02*" and the range of speed reference ± *L4-02*. OFF : The output speed is not in the range of "*L4-01* ± *L4-02*" or the range of speed reference ± *L4-02*.	606
4	Speed Detection 1	V/f OLV CLV CLV/PM The terminal deactivates when the output speed > "*L4-01 [Speed Agree Detection Level]* + *L4-02 [Speed Agree Detection Width]*". After the terminal deactivates, the terminal stays deactivated until the output speed is at the value of *L4-01*. **Note:** • The detection function operates in the two motor rotation directions. The drive uses the *L4-01* value as the Up/Down detection level. • The drive outputs the motor speed status when *A1-02 = 3, 7 [Control Method Selection = CLV, CLV/PM]*. ON : The output speed < *L4-01*, or the output speed ≤ "*L4-01* + *L4-02*" OFF : The output speed > "*L4-01* + *L4-02*"	607
5	Speed Detection 2	V/f OLV CLV CLV/PM The terminal activates when the output speed > *L4-01 [Speed Agree Detection Level]*. After the terminal activates, the terminal stays activated until the output speed is at the value of "*L4-01* - *L4-02*". **Note:** • The detection function operates in the two motor rotation directions. The drive uses the *L4-01* value as the Up/Down detection level. • The drive outputs the motor speed status when *A1-02 = 3, 7 [Control Method Selection = CLV, CLV/PM]*. ON : The output speed > *L4-01* OFF : The output speed < "*L4-01* - *L4-02*", or the output speed ≤ *L4-01*	607
6	Drive Ready	V/f OLV CLV CLV/PM The terminal activates when the drive is ready and running.	608
7	DC Bus Undervoltage	V/f OLV CLV CLV/PM The terminal activates when the DC bus voltage or control circuit power supply is at the voltage set in *L2-05 [Undervoltage Detection Lvl (Uv1)]* or less. The terminal also activates when there is a fault with the DC bus voltage. ON : The DC bus voltage ≤ *L2-05* OFF : The DC bus voltage > *L2-05*	608
8	During Baseblock (N.O.)	V/f OLV CLV CLV/PM The terminal activates during baseblock. When the drive is in baseblock, the drive output transistor stops switching and does not make DC bus voltage. ON : During baseblock OFF : The drive is not in baseblock.	608

Setting Value	Function	Description	Ref.
9	Speed Reference from Keypad	V/f OLV CLV CLV/PM Shows the selected speed reference source. ON : The keypad is the speed reference source. OFF : Parameter *b1-01 [Speed Reference Selection 1]* is the speed reference source.	608
A	Up/Down Command Source	V/f OLV CLV CLV/PM Shows the selected Up/Down command source. ON : The keypad is the Up/Down command source. OFF : Parameter *b1-02 [Up/Down Command Selection 1]* is the Up/Down command source.	608
B	Torque Detection 1 (N. O.)	V/f OLV CLV CLV/PM The terminal activates when the drive detects overtorque or undertorque. ON : The output current/torque > *L6-02 [Torque Detection Level 1]*, or the output current/torque < *L6-02* for longer than the time set in *L6-03 [Torque Detection Time 1]*.	609
E	Fault	V/f OLV CLV CLV/PM The terminal activates when the drive detects a fault. **Note:** The terminal will not activate for *CPF00* and *CPF01 [Control Circuit Error]* faults.	609
F	Not Used	V/f OLV CLV CLV/PM Use this setting for unused terminals or to use terminals in through mode. Also use this setting as the PLC contact output via MEMOBUS/Modbus or the communication option. This signal does not function if you do not configure signals from the PLC.	609
10	Alarm	V/f OLV CLV CLV/PM The terminal activates when the drive detects a minor fault.	609
11	Fault Reset Command Active	V/f OLV CLV CLV/PM The terminal activates when the drive receives the Reset command from the control circuit terminal, serial communications, or the communication option.	609
12	Timer Output	V/f OLV CLV CLV/PM Sets the terminal as the timer output. Use this setting with the timer input set in *H1-xx = 18 [MFDI Function Selection = Timer Function]*.	609
13	Speed Agree 2	V/f OLV CLV CLV/PM The terminal activates when the output speed is in the range of the speed reference ± *L4-04 [Speed Agree Detection Width (+/-)]*. **Note:** • The detection function operates in the two motor rotation directions. • The drive outputs the motor speed status when *A1-02 = 3, 7 [Control Method Selection = CLV, CLV/PM]*. ON : The output speed is in the range of "speed reference ± *L4-04*". OFF : The output speed is not in the range of "speed reference ± *L4-04*".	609
14	User-Set Speed Agree 2	V/f OLV CLV CLV/PM The terminal activates when the output speed is in the range of *L4-03 [Speed Agree Detection Level (+/-)]* ± *L4-04 [Speed Agree Detection Width (+/-)]* and in the range of the speed reference ± *L4-04*. **Note:** • The detection level set in *L4-03* is a signed value. The drive will only detect in one direction. • The drive outputs the motor speed status when *A1-02 = 3, 7 [Control Method Selection = CLV, CLV/PM]*. ON : The output speed is in the range of "*L4-03* ± *L4-04*" and the range of speed reference ± *L4-04*. OFF : The output speed is not in the range of "*L4-03* ± *L4-04*" or the range of speed reference ± *L4-04*.	610
15	Speed Detection 3	V/f OLV CLV CLV/PM The terminal deactivates when the output speed > "*L4-03 [Speed Agree Detection Level(+/-)]* + *L4-04 [Speed Agree Detection Width(+/-)]*". After the terminal deactivates, the terminal stays deactivated until the output speed is at the value of *L4-03*. **Note:** • The detection level set in *L4-03* is a signed value. The drive will only detect in one direction. • The drive outputs the motor speed status when *A1-02 = 3, 7 [Control Method Selection = CLV, CLV/PM]*. ON : The output speed < *L4-03*, or the output speed ≤ "*L4-03* + *L4-04*" OFF : The output speed > "*L4-03* + *L4-04*"	610
16	Speed Detection 4	V/f OLV CLV CLV/PM The terminal activates when the output speed > *L4-03 [Speed Agree Detection Level(+/-)]*. After the terminal activates, the terminal stays activated until the output speed is at the value of "*L4-03* - *L4-04*". **Note:** • The detection level set in *L4-03* is a signed value. The drive will only detect in one direction. • The drive outputs the motor speed status when *A1-02 = 3, 7 [Control Method Selection = CLV, CLV/PM]*. ON : The output speed > *L4-03* OFF : The output speed < "*L4-03* - *L4-04*", or the output speed ≤ *L4-03*	611
18	Torque Detection 2 (N. O.)	V/f OLV CLV CLV/PM The terminal activates when the drive detects overtorque or undertorque. ON : The output current/torque > *L6-05 [Torque Detection Level 2]*, or the output current/torque < *L6-05* for longer than the time set in *L6-06 [Torque Detection Time 2]*.	611
1A	During Down Direction	V/f OLV CLV CLV/PM The terminal activates when the motor operates in the Down direction. ON : The motor is operating in the Down direction. OFF : The motor is operating in the Up direction or the motor stopped.	611

Setting Value	Function	Description	Ref.
1B	During Baseblock (N.C.)	V/f OLV CLV CLV/PM The terminal deactivates during baseblock. When the drive is in baseblock, the drive output transistor stops switching and does not make DC bus voltage. ON : The drive is not in baseblock. OFF : During baseblock	612
1C	Motor 2 Selected	V/f OLV CLV CLV/PM The terminal activates when you select motor 2. ON : Motor 2 Selected OFF : Motor 1 Selected	612
1E	Reset Enabled	V/f OLV CLV CLV/PM The terminal activates when the drive tries to reset after a fault has occurred.	612
1F	Motor Overload Alarm (oL1)	V/f OLV CLV CLV/PM The terminal activates when the electronic thermal protection value of the motor overload protective function is a minimum of 90% of the detection level.	612
20	Drive Overheat Pre-Alarm (oH)	V/f OLV CLV CLV/PM The terminal activates when the drive heatsink temperature is at the level set with *L8-02 [Overheat Alarm Level]*.	612
21	Safe Torque OFF	V/f OLV CLV CLV/PM The terminal activates (safety stop state) when the safety circuit and safety diagnosis circuit are operating correctly and when terminals H1-HC and H2-HC are OFF (Open). ON : Safety stop state OFF : Safety circuit fault or RUN/READY	613
2F	Maintenance Notification	V/f OLV CLV CLV/PM The terminal activates when drive components are at their estimated maintenance period. Tells you about the maintenance period for these items: • IGBT • Cooling fan • Capacitor • Soft charge bypass relay	613
30	During Torque Limit	V/f OLV CLV CLV/PM The terminal activates when the torque reference is the torque limit set with *L7 parameters*, *H3-02, H3-06, or H3-10 [MFAI Function Selection]*.	613
33	Zero Servo Complete	V/f OLV CLV CLV/PM The terminal activates when the motor rotor position is in the range set with *S3-04 [Position Lock Bandwidth]* during Position Lock at start or stop.	613
37	During Frequency Output	V/f OLV CLV CLV/PM The terminal activates when the drive outputs frequency. ON : The drive is outputting frequency. OFF : The drive is not outputting frequency.	613
47	PF Detected	V/f OLV CLV CLV/PM This terminal activates when the drive detects *PF [Input Phase Loss]*.	614
4E	Braking Transistor Fault (rr)	V/f OLV CLV CLV/PM The terminal activates when the internal braking transistor overheats and the drive detects an *rr [Dynamic Braking Transistor Fault]* fault.	614
50	Brake Control	V/f OLV CLV CLV/PM The terminal activates when it sends the signal to release the brake. Use this setting in the brake sequence for the elevator application. ON : The terminal outputs the signal to release the brake. OFF : The brake is applied.	614
51	Output Contactor Control	V/f OLV CLV CLV/PM The terminal activates when it sends the signal to close the electromagnetic contactor to the controller. Use this setting to open and close the electromagnetic contactor. ON : The terminal outputs the signal to close the electromagnetic contactor on the output side. OFF : The electromagnetic contactor is open.	614
52	Door Zone	V/f OLV CLV CLV/PM The terminal activates when the speed is at the value set in *L4-13 [Door Zone Level]*, and the controller should open the elevator door.	614
54	Light Load Direction	V/f OLV CLV CLV/PM The terminal activates or deactivates when the drive detects the light load direction with the Light Load Direction Search during emergency operation. ON : The light load direction is up. OFF : The light load direction is down.	614
55	Light Load Detection Active	V/f OLV CLV CLV/PM The terminal activates when the drive is ready for Light Load Direction Search. ON : The drive is ready for Light Load Direction Search. OFF : The Light Load Direction Search is in progress.	615

Setting Value	Function	Description	Ref.
58	Safe Disable Active	V/f OLV CLV CLV/PM The terminal activates when one or both of the Safe Disable Input terminals H1-HC and H2-HC are OFF. The terminal deactivates when both of the terminals H1-HC and H2-HC are ON. ON : One or both of the Safe Disable Input terminals H1-HC and H2-HC are OFF. OFF : Safe Disable Input terminals H1-HC and H2-HC are ON.	615
5C	Motor Current Monitor	V/f OLV CLV CLV/PM The terminal activates when the drive detects the motor current ≤ *L8-99 [Current Monitoring Level]* and the drive output shuts off.	615
5D	During Brake Torque Check	V/f OLV CLV CLV/PM The terminal activates when the MFDI terminal set for *H1-xx = 5D [Brake Trq Req]* activates. ON : The Brake Torque Check Request is ON. OFF : The Brake Torque Check Request is OFF and the Up/Down command is OFF.	615
5E	Brake Torque Check Complete	V/f OLV CLV CLV/PM The terminal activates when the drive did the Brake Torque Check operation for the time of "*S5-33 [Motor Torque Ramp Up Time] + S5-35 [Brake Torque Check Run Time]*" and the check has completed successfully. ON : The Brake Torque Check has completed successfully. OFF : The Brake Torque Check Request is OFF and the Up/Down command is OFF.	615
60	Internal Cooling Fan Failure	V/f OLV CLV CLV/PM The terminal activates when the drive detects a cooling fan failure in the drive.	615
61	Pole Position Detection Complete	V/f OLV CLV CLV/PM The terminal activates when the drive receives an Up/Down command and the drive detects the motor magnetic pole position of the PM motor.	616
65	Standby Output	V/f OLV CLV CLV/PM The terminal activates after the drive stops operating and after the time set in *b8-51 [Standby Mode Wait Time]*, or when the MFDI terminal set for *H1-xx = BB or 1BB [MFDI Function Selection = Standby or !Standby]* activates. ON : During Standby Mode OFF : The drive is not in Standby Mode.	616
69	External Power 24V Supply	V/f OLV CLV CLV/PM The terminal activates when there is an external 24 V power supply between terminals PS-AC. ON : The external 24V power supply is supplying power. OFF : The external 24V power supply is not supplying power.	617
6A	Data Logger Error	V/f OLV CLV CLV/PM The terminal activates when the drive detects a *LoG [Com Error / Abnormal SD card]*.	617
74	Slow Down	V/f OLV CLV CLV/PM The terminal activates when the MFDI terminal set for *H1-xx = 53 [Leveling Speed]* activates after the terminal set for *H1-xx = 50 [Nominal Speed]*, *51 [Intermediate Speed]*, or *52 [Releveling Speed]* is activated. ON : The MFDI terminal set for *H1-xx = 53* activates after the terminal set for *H1-xx = 50, 51, or 52* is activated. OFF : The MFDO terminal set for *H2-xx = 0 [During Run]* deactivates and the drive is stopped.	617
75	TDCC Pulse Output	V/f OLV CLV CLV/PM The terminal activates when it outputs the pulse for Travel Direction Change Counter (TDCC). With every direction change of the elevator car, the terminal outputs the TDCC pulse for 0.5 s to count down the number of direction changes. **Note:** This function is available only when *o4-40 = 1 [Travel Direct Change CounterEnbl = Enabled]*.	617
76	TDCC Alarm Level Reached	V/f OLV CLV CLV/PM The terminal activates when the Travel Direction Change Counter (TDCC) has reached the value set in *o4-41 [Travel Direct Counter AlarmLevel]*, and the drive detects a *TCA [TDCC Alarm]*. **Note:** This function is available only when *o4-40 = 1 [Travel Direct Change CounterEnbl = Enabled]*.	617
77	TDCC Fault Level Reached	V/f OLV CLV CLV/PM The terminal activates when the Travel Direction Change Counter (TDCC) is 0, and the drive detects a *TCF [TDCC Fault]*. This output signal shows that the lifetime of elevator ropes has expired. Replace elevator ropes. **Note:** This function is available only when *o4-40 = 1 [Travel Direct Change CounterEnbl = Enabled]*.	618
78	Short Circuit Brake Release	V/f OLV CLV CLV/PM The terminal activates when you remove the *STo [Safe Torque OFF]* or the input signal from the MFDI terminal set for *H1-xx = 9 [Baseblock Command (N.C.)]*. ON : The *STo* or *Baseblock Command* signal is removed. OFF : The *STo* or *Baseblock Command* signal is input.	618
7A	During Up Direction	V/f OLV CLV CLV/PM The terminal activates when the motor operates in the Up direction. ON : The motor is operating in the Up direction. OFF : The motor is operating in the Down direction or the motor stopped.	618
100	!During Run	V/f OLV CLV CLV/PM The terminal deactivates when you input an Up/Down command and when the drive is outputting voltage. ON : Drive is stopping OFF : Drive is running	618

<table>
<tr><th>Setting Value</th><th>Function</th><th>Description</th><th>Ref.</th></tr>
<tr><td>101</td><td>!Zero Speed</td><td>V/f OLV CLV CLV/PM
The terminal deactivates when the output speed < E1-09 [Minimum Output Frequency] or S1-01 [Zero Speed Level at Stop].
Note:
Parameter A1-02 [Control Method Selection] selects which parameter is the reference.
<table><tr><th>A1-02 Setting</th><th>Control Method Selection</th><th>Parameter Used as the Reference</th></tr><tr><td>0</td><td>V/f</td><td>E1-09</td></tr><tr><td>2</td><td>OLV</td><td>E1-09</td></tr><tr><td>3</td><td>CLV</td><td>S1-01</td></tr><tr><td>7</td><td>CLV/PM</td><td>S1-01</td></tr></table>ON : Output speed ≥ value of E1-09 or S1-01.
OFF : Output speed < value of E1-09 or S1-01.</td><td>618</td></tr>
<tr><td>102</td><td>!Speed Agree 1</td><td>V/f OLV CLV CLV/PM
The terminal deactivates when the output speed is in the range of the speed reference ± L4-02 [Speed Agree Detection Width].
Note:
• The detection function operates in the two motor rotation directions.
• The drive outputs the motor speed status when A1-02 = 3, 7 [Control Method Selection = CLV, CLV/PM].
ON : The output speed does not align with the speed reference although the drive is running.
OFF : The output speed is in the range of “speed reference ± L4-02”.</td><td>618</td></tr>
<tr><td>103</td><td>!User-Set Speed Agree 1</td><td>V/f OLV CLV CLV/PM
The terminal deactivates when the output speed is in the range of L4-01 [Speed Agree Detection Level] ± L4-02 [Speed Agree Detection Width] and in the range of the speed reference ± L4-02.
Note:
• The detection function operates in the two motor rotation directions. The drive uses the L4-01 value as the Up/Down detection level.
• The drive outputs the motor speed status when A1-02 = 3, 7 [Control Method Selection = CLV, CLV/PM].
ON : The output speed is not in the range of “L4-01 ± L4-02” or the range of speed reference ± L4-02.
OFF : The output speed is in the range of “L4-01 ± L4-02” and the range of speed reference ± L4-02.</td><td>618</td></tr>
<tr><td>104</td><td>!Speed Detection 1</td><td>V/f OLV CLV CLV/PM
The terminal activates when the output speed > “L4-01 [Speed Agree Detection Level] + L4-02 [Speed Agree Detection Width]”. After the terminal activates, the terminal stays activated until the output speed is at the value of L4-01.
Note:
• The detection function operates in the two motor rotation directions. The drive uses the L4-01 value as the Up/Down detection level.
• The drive outputs the motor speed status when A1-02 = 3, 7 [Control Method Selection = CLV, CLV/PM].
ON : The output speed > “L4-01 + L4-02”
OFF : The output speed < L4-01, or the output speed ≤ “L4-01 + L4-02”</td><td>618</td></tr>
<tr><td>105</td><td>!Speed Detection 2</td><td>V/f OLV CLV CLV/PM
The terminal deactivates when the output speed > L4-01 [Speed Agree Detection Level]. After the terminal deactivates, the terminal stays deactivated until the output speed is at the value of “L4-01 - L4-02”.
Note:
• The detection function operates in the two motor rotation directions. The drive uses the L4-01 value as the Up/Down detection level.
• The drive outputs the motor speed status when A1-02 = 3, 7 [Control Method Selection = CLV, CLV/PM].
ON : The output speed < “L4-01 - L4-02”, or the output speed ≤ L4-01
OFF : The output speed > L4-01</td><td>618</td></tr>
<tr><td>106</td><td>!Drive Ready</td><td>V/f OLV CLV CLV/PM
The terminal deactivates when the drive is ready and running.</td><td>618</td></tr>
<tr><td>107</td><td>!DC Bus Undervoltage</td><td>V/f OLV CLV CLV/PM
The terminal deactivates when the DC bus voltage or control circuit power supply is at the voltage set in L2-05 [Undervoltage Detection Lvl (Uv1)] or less. The terminal also deactivates when there is a fault with the DC bus voltage.
ON : The DC bus voltage > L2-05
OFF : The DC bus voltage ≤ L2-05</td><td>618</td></tr>
<tr><td>109</td><td>!Speed Reference from Keypad</td><td>V/f OLV CLV CLV/PM
Shows the selected speed reference source.
ON : Parameter b1-01 [Speed Reference Selection 1] is the speed reference source.
OFF : The keypad is the speed reference source.</td><td>618</td></tr>
<tr><td>10A</td><td>!Up/Down Command Source</td><td>V/f OLV CLV CLV/PM
Shows the selected Up/Down command source.
ON : Parameter b1-02 [Up/Down Command Selection 1] is the Up/Down command source.
OFF : The keypad is the Up/Down command source.</td><td>618</td></tr>
<tr><td>10B</td><td>Torque Detection 1 (N. C.)</td><td>V/f OLV CLV CLV/PM
The terminal deactivates when the drive detects overtorque or undertorque.
OFF : The output current/torque > L6-02 [Torque Detection Level 1], or the output current/torque < L6-02 for longer than the time set in L6-03 [Torque Detection Time 1].</td><td>618</td></tr>
</table>

Setting Value	Function	Description	Ref.
10E	!Fault	V/f OLV CLV CLV/PM The terminal deactivates when the drive detects a fault. **Note:** Faults *CPF00* and *CPF01 [Control Circuit Error]* are excluded.	618
110	!Alarm	V/f OLV CLV CLV/PM The terminal deactivates when the drive detects a minor fault.	618
111	!Fault Reset Command Active	V/f OLV CLV CLV/PM The terminal deactivates when the drive receives the Reset command from the control circuit terminal, serial communications, or the communication option.	618
112	!Timer Output	V/f OLV CLV CLV/PM Sets the terminal as the timer output. Use this setting with the timer input set in *H1-xx = 118 [MFDI Function Selection = !Timer Function]*.	618
113	!Speed Agree 2	V/f OLV CLV CLV/PM The terminal deactivates when the output speed is in the range of the speed reference ± *L4-04 [Speed Agree Detection Width(+/-)]*. **Note:** • The detection function operates in the two motor rotation directions. • The drive outputs the motor speed status when *A1-02 = 3, 7 [Control Method Selection = CLV, CLV/PM]*. ON : The output speed is not in the range of "speed reference ± *L4-04*". OFF : The output speed is in the range of "speed reference ± *L4-04*".	618
114	!User-Set Speed Agree 2	V/f OLV CLV CLV/PM The terminal deactivates when the output speed is in the range of *L4-03 [Speed Agree Detection Level (+/-)]* ± *L4-04 [Speed Agree Detection Width (+/-)]* and in the range of the speed reference ± *L4-04*. **Note:** • The detection level set in *L4-03* is a signed value. The drive will only detect in one direction. • The drive outputs the motor speed status when *A1-02 = 3, 7 [Control Method Selection = CLV, CLV/PM]*. ON : The output speed is not in the range of "*L4-03* ± *L4-04*" or the range of speed reference ± *L4-04*. OFF : The output speed is in the range of "*L4-03* ± *L4-04*" and the range of speed reference ± *L4-04*.	618
115	!Speed Detection 3	V/f OLV CLV CLV/PM The terminal activates when the output speed > "*L4-03 [Speed Agree Detection Level(+/-)]* + *L4-04 [Speed Agree Detection Width(+/-)]*". After the terminal activates, the terminal stays activated until the output speed is at the value of *L4-03*. **Note:** • The detection level set in *L4-03* is a signed value. The drive will only detect in one direction. • The drive outputs the motor speed status when *A1-02 = 3, 7 [Control Method Selection = CLV, CLV/PM]*. ON : The output speed > "*L4-03* + *L4-04*" OFF : The output speed < *L4-03*, or the output speed ≤ "*L4-03* + *L4-04*"	618
116	!Speed Detection 4	V/f OLV CLV CLV/PM The terminal deactivates when the output speed > *L4-03 [Speed Agree Detection Level(+/-)]*. After the terminal deactivates, the terminal stays deactivated until the output speed is at the value of "*L4-03* - *L4-04*". **Note:** • The detection level set in *L4-03* is a signed value. The drive will only detect in one direction. • The drive outputs the motor speed status when *A1-02 = 3, 7 [Control Method Selection = CLV, CLV/PM]*. ON : The output speed < "*L4-03* - *L4-04*", or the output speed ≤ *L4-03* OFF : The output speed > *L4-03*	618
118	Torque Detection 2 (N. C.)	V/f OLV CLV CLV/PM The terminal deactivates when the drive detects overtorque or undertorque. OFF : The output current/torque > *L6-05 [Torque Detection Level 2]*, or the output current/torque < *L6-05* for longer than the time set in *L6-06 [Torque Detection Time 2]*.	618
11A	!During Down Direction	V/f OLV CLV CLV/PM The terminal deactivates when the motor operates in the Down direction. ON : The motor is operating in the Up direction or the motor stopped. OFF : The motor is operating in the Down direction.	618
11C	!Motor 2 Selected	V/f OLV CLV CLV/PM The terminal deactivates when you select motor 2. ON : Motor 1 Selected OFF : Motor 2 Selected	618
11E	!Reset Enabled	V/f OLV CLV CLV/PM The terminal deactivates when the drive tries to reset after a fault has occurred.	618
11F	!Motor Overload Alarm (oL1)	V/f OLV CLV CLV/PM The terminal deactivates when the electronic thermal protection value of the motor overload protective function is a minimum of 90% of the detection level.	618
120	!Drive Overheat Pre-Alarm (oH)	V/f OLV CLV CLV/PM The terminal deactivates when the drive heatsink temperature is at the level set with *L8-02 [Overheat Alarm Level]*.	618
121	!Safe Torque OFF	V/f OLV CLV CLV/PM The terminal deactivates (safety stop state) when the safety circuit and safety diagnosis circuit are operating correctly and when terminals H1-HC and H2-HC are OFF (Open). ON : Safety circuit fault or RUN/READY OFF : Safety stop state	618

Setting Value	Function	Description	Ref.
12F	!Maintenance Notification	V/f OLV CLV CLV/PM The terminal deactivates when drive components are at their estimated maintenance period. Tells you about the maintenance period for these items: • IGBT • Cooling fan • Capacitor • Soft charge bypass relay	618
130	!During Torque Limit	V/f OLV CLV CLV/PM The terminal deactivates when the torque reference is the torque limit set with *L7 parameters*, *H3-02, H3-06, or H3-10 [MFAI Function Selection]*.	618
133	!Zero Servo Complete	V/f OLV CLV CLV/PM The terminal deactivates when the motor rotor position is in the range set with *S3-04 [Position Lock Bandwidth]* during Position Lock at start or stop.	618
137	!During Frequency Output	V/f OLV CLV CLV/PM The terminal deactivates when the drive outputs frequency. ON : The drive is not outputting frequency. OFF : The drive is outputting frequency.	618
147	!PF Detected	V/f OLV CLV CLV/PM This terminal deactivates when the drive detects *PF [Input Phase Loss]*.	618
14E	!Braking Transistor Fault (rr)	V/f OLV CLV CLV/PM The terminal deactivates when the internal braking transistor overheats and the drive detects an *rr [Dynamic Braking Transistor Fault]* fault.	618
150	!Brake Control	V/f OLV CLV CLV/PM The terminal deactivates when it sends the signal to release the brake. Use this setting in the brake sequence for the elevator application. ON : The brake is applied. OFF : The terminal outputs the signal to release the brake.	618
151	!Output Contactor Control	V/f OLV CLV CLV/PM The terminal deactivates when it sends the signal to close the electromagnetic contactor to the controller. Use this setting to open and close the electromagnetic contactor. ON : The electromagnetic contactor is open. OFF : The terminal outputs the signal to close the electromagnetic contactor on the output side.	618
152	!Door Zone	V/f OLV CLV CLV/PM The terminal deactivates when the speed has reached the value set in *L4-13 [Door Zone Level]*, and the controller should open the elevator door.	618
154	!Light Load Direction	V/f OLV CLV CLV/PM The terminal activates or deactivates when the drive detects the light load direction with the Light Load Direction Search during emergency operation. ON : The light load direction is down. OFF : The light load direction is up.	618
155	!Light Load Detection Active	V/f OLV CLV CLV/PM The terminal deactivates when the drive is ready for Light Load Direction Search. ON : The Light Load Direction Search is in progress. OFF : The drive is ready for Light Load Direction Search.	618
158	!Safe Disable Active	V/f OLV CLV CLV/PM The terminal deactivates when one or both of the Safe Disable Input terminals H1-HC and H2-HC are OFF. The terminal activates when terminals H1-HC and H2-HC are ON. ON : Safe Disable Input terminals H1-HC and H2-HC are ON. OFF : One or both of the Safe Disable Input terminals H1-HC and H2-HC are OFF.	618
15C	!Motor Current Monitor	V/f OLV CLV CLV/PM The terminal deactivates when the drive detects the motor current ≤ *L8-99 [Current Monitoring Level]* while the drive output shuts off.	618
15D	!During Brake Torque Check	V/f OLV CLV CLV/PM The terminal deactivates when the MFDI terminal set for *H1-xx = 15D [!Brake Trq Req]* activates. ON : The Brake Torque Check Request is OFF and the Up/Down command is OFF. OFF : The Brake Torque Check Request is ON.	618
15E	!Brake Torque Check Complete	V/f OLV CLV CLV/PM The terminal deactivates when the drive did the Brake Torque Check operation for the time of "*S5-33 [Motor Torque Ramp Up Time] + S5-35 [Brake Torque Check Run Time]*" and the check has completed successfully. ON : The Brake Torque Check Request is OFF and the Up/Down command is OFF. OFF : The Brake Torque Check has completed successfully.	618
160	!Internal Cooling Fan Failure	V/f OLV CLV CLV/PM The terminal deactivates when the drive detects a cooling fan failure in the drive.	618
161	!Pole Position Detection Complete	V/f OLV CLV CLV/PM The terminal deactivates when the drive receives an Up/Down command and the drive detects the motor magnetic pole position of the PM motor.	618

Setting Value	Function	Description	Ref.
165	!Standby Output	V/f OLV CLV CLV/PM The terminal deactivates after the drive stops operating and after the time set in *b8-51 [Standby Mode Wait Time]*, or when the MFDI terminal set for *H1-xx = BB or 1BB [MFDI Function Selection = Standby or !Standby]* activates. ON : The drive is not in Standby Mode. OFF : During Standby Mode	618
169	!External Power 24V Supply	V/f OLV CLV CLV/PM The terminal deactivates when there is an external 24V power supply between terminals PS-AC. ON : The external 24V power supply is not supplying power. OFF : The external 24V power supply is supplying power.	618
16A	!Data Logger Error	V/f OLV CLV CLV/PM The terminal deactivates when the drive detects a *LoG [Com Error / Abnormal SD card]*.	618
174	!Slow Down	V/f OLV CLV CLV/PM The terminal deactivates when the MFDI terminal set for *H1-xx = 153 [!Leveling Speed]* activates after the terminal set for *H1-xx = 150 [!Nominal Speed]*, *151 [!Intermediate Speed]*, or *152 [!Releveling Speed]* activated. ON : The MFDO terminal set for *H2-xx = 100 [!During Run]* deactivates and the drive is stopped. OFF : The MFDI terminal set for *H1-xx = 153* activates after the terminal set for *H1-xx = 150, 151, or 152* activated.	618
175	!TDCC Pulse Output	V/f OLV CLV CLV/PM The terminal deactivates when it outputs the pulse for Travel Direction Change Counter (TDCC). With every direction change of the elevator car, the terminal outputs the TDCC pulse for 0.5 s to count down the number of direction changes. **Note:** This function is available only when *o4-40 = 1 [Travel Direct Change CounterEnbl = Enabled]*.	618
176	!TDCC Alarm Level Reached	V/f OLV CLV CLV/PM The terminal deactivates when the Travel Direction Change Counter (TDCC) has reached the value set in *o4-41 [Travel Direct Counter AlarmLevel]*, and the drive detects a *TCA [TDCC Alarm]*. **Note:** This function is available only when *o4-40 = 1 [Travel Direct Change CounterEnbl = Enabled]*.	618
177	!TDCC Fault Level Reached	V/f OLV CLV CLV/PM The terminal deactivates when the Travel Direction Change Counter (TDCC) is 0, and the drive detects a *TCF [TDCC Fault]*. This output signal shows that the lifetime of elevator ropes has expired. Replace elevator ropes. **Note:** This function is available only when *o4-40 = 1 [Travel Direct Change CounterEnbl = Enabled]*.	618
178	!Short Circuit Brake Release	V/f OLV CLV CLV/PM The terminal deactivates when you remove the *STo [Safe Torque OFF]* or the input signal from the MFDI terminal set for *H1-xx = 9 [Baseblock Command (N.C.)]*. ON : The *STo* or *Baseblock Command* signal is input. OFF : The *STo* or *Baseblock Command* signal is removed.	618
17A	!During Up Direction	V/f OLV CLV CLV/PM The terminal deactivates when the motor operates in the Up direction. ON : The motor is operating in the Down direction or the motor stopped. OFF : The motor is operating in the Up direction.	618

◆ H3: Analog Inputs

No. (Hex.)	Name	Description	Default (Range)	Ref.
H3-01 (0410)	Terminal A1 Signal Level Select	V/f OLV CLV CLV/PM Sets the input signal level for MFAI terminal A1. 0 : 0 to 10V (Lower Limit at 0) 1 : -10 to +10V (Bipolar Reference)	0 (0, 1)	620
H3-02 (0434)	Terminal A1 Function Selection	V/f OLV CLV CLV/PM Sets the function for MFAI terminal A1.	0 (0 - 1F)	620
H3-03 (0411) RUN	Terminal A1 Gain Setting	V/f OLV CLV CLV/PM Sets the gain of the analog signal input to MFAI terminal A1.	100.0% (-999.9 - +999.9%)	620
H3-04 (0412) RUN	Terminal A1 Bias Setting	V/f OLV CLV CLV/PM Sets the bias of the analog signal input to MFAI terminal A1.	0.0% (-999.9 - +999.9%)	620
H3-05 (0413)	Terminal A3 Signal Level Select	V/f OLV CLV CLV/PM Sets the input signal level for MFAI terminal A3. 0 : 0 to 10V (Lower Limit at 0) 1 : -10 to +10V (Bipolar Reference)	0 (0, 1)	620
H3-06 (0414)	Terminal A3 Function Selection	V/f OLV CLV CLV/PM Sets the function for MFAI terminal A3.	1F (0 - 1F)	621

No. (Hex.)	Name	Description	Default (Range)	Ref.
H3-07 (0415) RUN	Terminal A3 Gain Setting	V/f OLV CLV CLV/PM Sets the gain of the analog signal input to MFAI terminal A3.	100.0% (-999.9 - +999.9%)	621
H3-08 (0416) RUN	Terminal A3 Bias Setting	V/f OLV CLV CLV/PM Sets the bias of the analog signal input to MFAI terminal A3.	0.0% (-999.9 - +999.9%)	621
H3-09 (0417)	Terminal A2 Signal Level Select	V/f OLV CLV CLV/PM Sets the input signal level for MFAI terminal A2. 0 : 0-10V (LowLim=0) 1 : -10 to +10V (Bipolar Reference) 2 : 4 to 20 mA 3 : 0 to 20 mA	0 (0 - 3)	621
H3-10 (0418)	Terminal A2 Function Selection	V/f OLV CLV CLV/PM Sets the function for MFAI terminal A2.	1F (0 - 1F)	622
H3-11 (0419) RUN	Terminal A2 Gain Setting	V/f OLV CLV CLV/PM Sets the gain of the analog signal input to MFAI terminal A2.	100.0% (-999.9 - +999.9%)	622
H3-12 (041A) RUN	Terminal A2 Bias Setting	V/f OLV CLV CLV/PM Sets the bias of the analog signal input to MFAI terminal A2.	0.0% (-999.9 - +999.9%)	622
H3-13 (041B)	Analog Input FilterTime Constant	V/f OLV CLV CLV/PM Sets the time constant for primary delay filters on MFAI terminals.	0.03 s (0.00 - 2.00 s)	622
H3-16 (02F0)	Terminal A1 Offset	V/f OLV CLV CLV/PM Sets the offset level for analog signals input to terminal A1. Usually it is not necessary to change this setting.	0 (-500 - +500)	622
H3-17 (02F1)	Terminal A2 Offset	V/f OLV CLV CLV/PM Sets the offset level for analog signals input to terminal A2. Usually it is not necessary to change this setting.	0 (-500 - +500)	622
H3-18 (02F2)	Terminal A3 Offset	V/f OLV CLV CLV/PM Sets the offset level for analog signals input to terminal A3. Usually it is not necessary to change this setting.	0 (-500 - +500)	623

◆ H3-xx: MFAI Setting Values

Setting Value	Function	Description	Ref.
0	Speed Reference	V/f OLV CLV CLV/PM The input value from the MFAI terminal set with this function becomes the master speed reference.	623
2	Auxiliary Speed Reference 1	V/f OLV CLV CLV/PM Sets Reference 2 through multi-step speed reference to enable the command reference (Auxiliary Speed Reference 1) from the analog input terminal set here. This value is a percentage where the *E1-04 [Maximum Output Frequency]* setting is a setting value of 100%.	623
3	Auxiliary Speed Reference 2	V/f OLV CLV CLV/PM Sets Reference 3 through multi-step speed reference to enable the command reference (Auxiliary Speed Reference 2) from the analog input terminal set here. This value is a percentage where the *E1-04 [Maximum Output Frequency]* setting is a setting value of 100%.	623
E	Motor Temperature (PTC Input)	V/f OLV CLV CLV/PM Uses the motor Positive Temperature Coefficient (PTC) thermistor to prevent heat damage to the motor as a percentage of the current value when the 10 V analog signal is input.	623
14	Torque Compensation	V/f OLV CLV CLV/PM Enters the torque compensation value if the motor rated torque is 100%.	624
1F	Not Used	V/f OLV CLV CLV/PM Use this setting for unused terminals or to use terminals in through mode.	624

◆ H4: Analog Outputs

No. (Hex.)	Name	Description	Default (Range)	Ref.
H4-01 (041D) Expert	Terminal FM Analog Output Select	V/f OLV CLV CLV/PM Sets the monitor number to send from MFAO terminal FM. Set the *x-xx* part of the *Ux-xx [Monitors]*. For example, set *H4-01 = 102* to monitor *U1-02 [Output Speed]*.	102 (000 - 999)	626
H4-02 (041E) RUN Expert	Terminal FM Analog Output Gain	V/f OLV CLV CLV/PM Sets the gain of the monitor signal that is sent from MFAO terminal FM. Sets the analog signal output level from the terminal FM at 10 V as 100% when an output for monitoring items is 100%.	100.0% (-999.9 - +999.9%)	626
H4-03 (041F) RUN Expert	Terminal FM Analog Output Bias	V/f OLV CLV CLV/PM Sets the bias of the monitor signal that is sent from MFAO terminal FM. Set the level of the analog signal sent from terminal FM at 10 V as 100% when an output for monitoring items is 0%.	0.0% (-999.9 - +999.9%)	626
H4-04 (0420) Expert	Terminal AM Analog Output Select	V/f OLV CLV CLV/PM Sets the monitoring number to be output from the MFAO terminal AM. Set the *x-xx* part of the *Ux-xx [Monitors]*. For example, set *H4-04 = 103* to monitor *U1-03 [Output Current]*.	103 (000 - 999)	626
H4-05 (0421) RUN Expert	Terminal AM Analog Output Gain	V/f OLV CLV CLV/PM Sets the gain of the monitor signal that is sent from MFAO terminal AM. When an output for monitoring items is 100%, this parameter sets the analog signal output level from the AM terminal at 10 V as 100%.	50.0% (-999.9 - +999.9%)	626
H4-06 (0422) RUN Expert	Terminal AM Analog Output Bias	V/f OLV CLV CLV/PM Sets the bias of the monitor signal that is sent from MFAO terminal AM. When an output for monitoring items is 0%, this parameter sets the analog signal output level from the AM terminal at 10 V as 100%.	0.0% (-999.9 - +999.9%)	627
H4-07 (0423) Expert	Terminal FM Signal Level Select	V/f OLV CLV CLV/PM Sets the MFAO terminal FM output signal level. 0 : 0 to 10Vdc 1 : -10 to +10Vdc	0 (0, 1)	627
H4-08 (0424) Expert	Terminal AM Signal Level Select	V/f OLV CLV CLV/PM Sets the MFAO terminal AM output signal level. 0 : 0 to 10Vdc 1 : -10 to +10Vdc	0 (0, 1)	627
H4-20 (0B53)	Analog Power Monitor 100% Level	V/f OLV CLV CLV/PM Sets the level at 10 V when *U1-08 [Output Power]* is set for analog output.	0.00 kW (0.00 - 650.00 kW)	627

◆ H5: Serial Communication

No. (Hex.)	Name	Description	Default (Range)	Ref.
H5-01 (0425) Expert	Drive Node Address	V/f OLV CLV CLV/PM Sets the communication slave address for drives. **Note:** • Re-energize the drive or set *H5-20 = 1 [Communication Parameters Reload = Reload Now]* after you change the parameter setting. • Setting 0 will not let the drive respond to MEMOBUS/Modbus communications.	1 (0 - FF)	627
H5-02 (0426) Expert	Communication Speed Selection	V/f OLV CLV CLV/PM Sets the communications speed for MEMOBUS/Modbus communications. **Note:** Re-energize the drive or set *H5-20 = 1 [Communication Parameters Reload = Reload Now]* after you change the parameter setting. 0 : 1200 bps 1 : 2400 bps 2 : 4800 bps 3 : 9600 bps 4 : 19.2 kbps 5 : 38.4 kbps 6 : 57.6 kbps 7 : 76.8 kbps 8 : 115.2 kbps	3 (0 - 8)	628

No. (Hex.)	Name	Description	Default (Range)	Ref.
H5-03 (0427) Expert	Communication Parity Selection	V/f OLV CLV CLV/PM Sets the communications parity used for MEMOBUS/Modbus communications. **Note:** Re-energize the drive or set *H5-20 = 1 [Communication Parameters Reload = Reload Now]* after you change the parameter setting. 0 : No parity 1 : Even parity 2 : Odd parity	0 (0 - 2)	628
H5-04 (0428) Expert	Communication Error Stop Method	V/f OLV CLV CLV/PM Sets the motor Stopping Method when the drive detects *CE [Modbus Communication Error]*. 0 : Ramp to Stop 1 : Coast to Stop 2 : Emergency Stop (Use C1-09) 3 : Alarm Only	3 (0 - 3)	628
H5-05 (0429) Expert	Comm Fault Detection Selection	V/f OLV CLV CLV/PM Sets the function that detects *CE [Modbus Communication Error]* issues during MEMOBUS/Modbus communications. 0 : Disabled 1 : Enabled	1 (0, 1)	629
H5-06 (042A) Expert	Drive Transmit Wait Time	V/f OLV CLV CLV/PM Sets the time to wait to send a response message after the drive receives a command message from the master. **Note:** Restart the drive after you change the parameter setting.	5 ms (5 - 65 ms)	629
H5-09 (0435) Expert	CE Detection Time	V/f OLV CLV CLV/PM Sets the detection time for *CE [Modbus Communication Error]* issues when communication stops.	2.0 s (0.0 - 10.0 s)	629
H5-10 (0436) Expert	Modbus Register 0025H Unit Sel	V/f OLV CLV CLV/PM Sets the unit of measure used for the MEMOBUS/Modbus communications monitor register 0025H (output voltage reference monitor). 0 : 0.1 V units 1 : 1 V units	0 (0, 1)	629
H5-11 (043C) Expert	Comm ENTER Command Mode	V/f OLV CLV CLV/PM Sets the function to make the Enter command necessary to change parameters through MEMOBUS/Modbus communications. 0 : ENTER Command Required 1 : ENTER Command Not Required	0 (0, 1)	629
H5-18 (11A2)	Motor Speed Filter over Comms	V/f OLV CLV CLV/PM Sets the filter time constant used when monitoring motor speed during MEMOBUS/Modbus communications or with a communication option.	0 ms (0 - 100 ms)	630
H5-20 (0B57)	Communication Parameters Reload	V/f OLV CLV CLV/PM Sets the function to immediately enable updated MEMOBUS/Modbus communications parameters. 0 : Reload at Next Power Cycle 1 : Reload Now	0 (0, 1)	630
H5-25 (1589) RUN	Function 5A Register 1 Selection	V/f OLV CLV CLV/PM Returns the contents of the specified MEMOBUS/Modbus communications register when responding to the master device.	0044 (U1-05) (0000 - FFFF)	630
H5-26 (158A) RUN	Function 5A Register 2 Selection	V/f OLV CLV CLV/PM Returns the contents of the specified MEMOBUS/Modbus communications register when responding to the master device.	0045 (U1-06) (0000 - FFFF)	630
H5-27 (158B) RUN	Function 5A Register 3 Selection	V/f OLV CLV CLV/PM Returns the contents of the specified MEMOBUS/Modbus communications register when responding to the master device.	0042 (U1-03) (0000 - FFFF)	630
H5-28 (158C) RUN	Function 5A Register 4 Selection	V/f OLV CLV CLV/PM Returns the contents of the specified MEMOBUS/Modbus communications register when responding to the master device.	0049 (U1-10) (0000 - FFFF)	631

11.11 L: Protection Functions

◆ L1: Motor Protection

No. (Hex.)	Name	Description	Default (Range)	Ref.
L1-01 (0480)	Motor Overload (oL1) Protection	V/f OLV CLV CLV/PM Sets the motor overload protection with electronic thermal protectors. 0 : Disabled 1 : Variable Torque 2 : Constant Torque 10:1 Speed Range 3 : Constant Torque 100:1 SpeedRange 5 : PM Constant Torque 6 : Variable Torque (50Hz) **Note:** • The default setting and setting range change when *A1-02 [Control Method Selection]* changes: –When *A1-02 = 0, 2, 3 [V/f, OLV, CLV]*, the default setting is *1*, and the setting range is *0 to 3, 6*. –When *A1-02 = 7 [CLV/PM]*, the default setting is *5*, and the setting range is *0, 5*. • When only one motor is connected to a drive, set *L1-01 = 1 to 6 [Enabled]*. External thermal relays are not necessary in these conditions.	Determined by A1-02 (0 - 3, 5, 6)	247
L1-02 (0481) Expert	Motor Overload Protection Time	V/f OLV CLV CLV/PM Sets the operation time for the electronic thermal protector of the drive to prevent damage to the motor. Usually it is not necessary to change this setting.	1.0 min (0.1 - 5.0 min)	249
L1-03 (0482) Expert	Motor Thermistor oH Alarm Select	V/f OLV CLV CLV/PM Sets drive operation when the PTC input signal entered into the drive is at the *oH3 [Motor Overheat Alarm]* detection level. 0 : Ramp to Stop 1 : Coast to Stop 2 : Emergency Stop (Use C1-09) 3 : Alarm Only	3 (0 - 3)	250
L1-04 (0483) Expert	Motor Thermistor oH Fault Select	V/f OLV CLV CLV/PM Sets the drive operation when the PTC input signal to the drive is at the *oH4 [Motor Overheat Fault (PTC Input)]* detection level. 0 : Ramp to Stop 1 : Coast to Stop 2 : Emergency Stop (Use C1-09)	1 (0 - 2)	250
L1-05 (0484) Expert	Motor Thermistor Filter Time	V/f OLV CLV CLV/PM Sets the primary delay time constant for the PTC input signal entered to the drive. This parameter prevents accidental motor overheat faults.	0.20 s (0.00 - 10.00 s)	636
L1-08 (1103) Expert	oL1 Current Level for Motor 1	V/f OLV CLV CLV/PM Sets the reference current for the motor 1 thermal overload detection. When the current level > 0.0 A, you cannot set this value < 10% of the continuous rated output current.	0.0 A (0.0 - 2250.0 A)	636
L1-13 (046D)	Motor Overload Memory Selection	V/f OLV CLV CLV/PM Sets the function to keep the current electronic thermal protector value when the drive stops receiving power. 0 : Disabled 1 : Enabled	1 (0, 1)	637

◆ L2: Undervoltage Detection

No. (Hex.)	Name	Description	Default (Range)	Ref.
L2-05 (0489) Expert	Undervoltage Detection Lvl (Uv1)	V/f OLV CLV CLV/PM Sets the voltage at which a *Uv1 [DC Bus Undervoltage]* fault is triggered. Usually it is not necessary to change this setting. NOTICE **Damage to Equipment** **When you set this parameter to a value lower than the default, you must install an AC reactor on the input side of the power supply. If you do not install an AC reactor, it will cause damage to the drive circuitry.**	Determined by o2-04 and E1-01 (200 V Class: 150 - 210 V, 400 V Class: 300 - 420 V)	637

◆ L3: Stall Prevention

No. (Hex.)	Name	Description	Default (Range)	Ref.
L3-01 (048F) Expert	Stall Prevention during Accel	V/f OLV CLV CLV/PM Sets the method of the Stall Prevention During Acceleration. 0 : Disabled 1 : Enabled 3 : Current Limit Method	1 (0, 1, 3)	637
L3-02 (0490) Expert	Stall Prevent Level during Accel	V/f OLV CLV CLV/PM Sets the output current level to activate the Stall Prevention function during acceleration as a percentage of the continuous rated output current.	Determined by L8-38 (0 - 171%)	638
L3-05 (0493) Expert	Stall Prevention during RUN	V/f OLV CLV CLV/PM Sets the function to enable and disable Stall Prevention During Run. **Note:** An output speed lower than 6 Hz will disable Stall Prevention during Run. The *L3-05* and *L3-06 [Stall Prevent Level during Run]* settings do not have an effect. 0 : Disabled 1 : Deceleration Ramp 1 (C1-02) 2 : Deceleration Ramp 2 (C1-04)	1 (0 - 2)	638
L3-06 (0494) Expert	Stall Prevent Level during Run	V/f OLV CLV CLV/PM Sets the output current level to enable the Stall Prevention function during operation as a percentage of the continuous rated output current. **Note:** This parameter is applicable when *L3-05 = 1, 2 [Stall Prevention during RUN = Deceleration Ramp 1 (C1-02), Deceleration Ramp 2 (C1-04)]*.	Determined by L8-38 (30 - 171%)	639

◆ L4: Speed Detection

No. (Hex.)	Name	Description	Default (Range)	Ref.
L4-01 (0499) Expert	Speed Agree Detection Level	V/f OLV CLV CLV/PM Sets the level to detect speed agree or motor speed when *H2-01 to H2-05 = 2, 3, 4, 5 [MFDO Function Selection = Speed Agree 1, User-Set Speed Agree 1, Speed Detection 1, Speed Detection 2]*.	0.0% (0.0 - 100.0%)	639
L4-02 (049A) Expert	Speed Agree Detection Width	V/f OLV CLV CLV/PM Sets the width to detect speed agree or motor speed when *H2-01 to H2-05 = 2, 3, 4, 5 [MFDO Function Selection = Speed Agree 1, User-Set Speed Agree 1, Speed Detection 1, Speed Detection 2]*.	4.0% (0.0 - 40.0%)	639
L4-03 (049B) Expert	Speed Agree Detection Level(+/-)	V/f OLV CLV CLV/PM Sets the speed agree detection level or motor speed detection level when *H2-01 to H2-05 = 13, 14, 15, 16 [MFDO Function Selection = Speed Agree 2, User-Set Speed Agree 2, Speed Detection 3, Speed Detection 4]*.	0.0% (-100.0 - +100.0%)	639
L4-04 (049C) Expert	Speed Agree Detection Width(+/-)	V/f OLV CLV CLV/PM Sets the width to detect speed agree or motor speed when *H2-01 to H2-05 = 13, 14, 15, 16 [MFDO Function Selection = Speed Agree 2, User-Set Speed Agree 2, Speed Detection 3, Speed Detection 4]*.	4.0% (0.0 - 40.0%)	639
L4-05 (049D) Expert	Spd Ref Loss Detection Selection	V/f OLV CLV CLV/PM Sets the operation when the drive detects a loss of speed reference. 0 : Stop 1 : Run at (L4-06 x Last Reference)	0 (0, 1)	640
L4-06 (04C2) Expert	Speed Reference @Loss of Ref	V/f OLV CLV CLV/PM Sets the speed reference as a percentage to continue drive operation after it detects a speed reference loss. The value is a percentage of the speed reference before the drive detected the loss.	80.0% (0.0 - 100.0%)	640
L4-07 (0470) Expert	Speed Agree Detection Selection	V/f OLV CLV CLV/PM Sets the condition that activates speed detection. 0 : No Detection during Baseblock 1 : Detection Always Enabled	0 (0, 1)	640
L4-13 (04F6) Expert	Door Zone Level	V/f OLV CLV CLV/PM Sets the speed level for the elevator door to open. When the elevator car decelerates to the speed level set in this parameter, an MFDO terminal set for *H2-xx = 52 [MFDO Function Selection = Door Zone]* will be active.	0.0% (0.0 - 100.0%)	640

◆ L5: Automatic Fault Reset

No. (Hex.)	Name	Description	Default (Range)	Ref.
L5-01 (049E) Expert	Number of Auto Reset Attempts	V/f OLV CLV CLV/PM Sets the number of times that the drive will try to do Automatic Fault Reset in 10.0 s.	0 (0 - 10 times)	641
L5-02 (049F) Expert	Fault Output during Auto Reset	V/f OLV CLV CLV/PM Sets the MFDO terminal set for *H2-xx = E [Fault]* to send a fault output signal when the drive tries to reset. 0 : No fault output 1 : Fault output is set	0 (0, 1)	642
L5-06 (0522) Expert	Undervoltage Fault Reset Select	V/f OLV CLV CLV/PM Sets the limit conditions for the number of reset attempts after a *Uv1 [DC Bus Undervoltage]* fault. 0 : Same as L5-01 condition 1 : Always automatically reset Uv1	0 (0, 1)	642

◆ L6: Torque Detection

No. (Hex.)	Name	Description	Default (Range)	Ref.
L6-01 (04A1) Expert	Torque Detection Selection 1	V/f OLV CLV CLV/PM Sets the torque detection conditions that will trigger an overtorque or undertorque response from the drive. 0 : Disabled 1 : oL @ Speed Agree - Alarm only 2 : oL @ RUN - Alarm only 3 : oL @ Speed Agree - Fault 4 : oL @ RUN - Fault 5 : UL @ Speed Agree - Alarm only 6 : UL @ RUN - Alarm only 7 : UL @ Speed Agree - Fault 8 : UL @ RUN - Fault	0 (0 - 8)	644
L6-02 (04A2) Expert	Torque Detection Level 1	V/f OLV CLV CLV/PM Sets the detection level for Overtorque/Undertorque Detection 1. In V/f control, continuous rated output current of the drive = 100% value. In vector control, motor rated torque = 100% value.	171% (0 - 300%)	644
L6-03 (04A3) Expert	Torque Detection Time 1	V/f OLV CLV CLV/PM Sets the detection time for Overtorque/Undertorque Detection 1.	0.1 s (0.0 - 10.0 s)	644
L6-04 (04A4) Expert	Torque Detection Selection 2	V/f OLV CLV CLV/PM Sets the speed range that detects overtorque and undertorque and the operation of drives (operation status) after detection. 0 : Disabled 1 : oL @ Speed Agree - Alarm only 2 : oL @ RUN - Alarm only 3 : oL @ Speed Agree - Fault 4 : oL @ RUN - Fault 5 : UL @ Speed Agree - Alarm only 6 : UL @ RUN - Alarm only 7 : UL @ Speed Agree - Fault 8 : UL @ RUN - Fault	0 (0 - 8)	645
L6-05 (04A5) Expert	Torque Detection Level 2	V/f OLV CLV CLV/PM Sets the detection level for Overtorque/Undertorque Detection 2. In V/f control, continuous rated output current of the drive = 100% value. In vector control, motor rated torque = 100% value.	171% (0 - 300%)	645
L6-06 (04A6) Expert	Torque Detection Time 2	V/f OLV CLV CLV/PM Sets the detection time for Overtorque/Undertorque Detection 2.	0.1 s (0.0 - 10.0 s)	645

◆ L7: Torque Limit

No. (Hex.)	Name	Description	Default (Range)	Ref.
L7-01 (04A7) RUN Expert	Forward Torque Limit	V/f OLV CLV CLV/PM Sets the torque limit value for forward motoring as a percentage, where motor rated torque is the 100% value.	200% (0 - 300%)	646
L7-02 (04A8) RUN Expert	Reverse Torque Limit	V/f OLV CLV CLV/PM Sets the torque limit value for reversed motoring as a percentage, where motor rated torque is the 100% value.	200% (0 - 300%)	646
L7-03 (04A9) RUN Expert	Forward Regenerative Trq Limit	V/f OLV CLV CLV/PM Sets the torque limit value for forward regenerative conditions as a percentage of the motor rated torque.	200% (0 - 300%)	647
L7-04 (04AA) RUN Expert	Reverse Regenerative Trq Limit	V/f OLV CLV CLV/PM Sets the torque limit value for reversed regenerative conditions as a percentage of the motor rated torque.	200% (0 - 300%)	647
L7-16 (044D) Expert	Torque Limit Process at Start	V/f OLV CLV CLV/PM Assigns a time filter that lets the torque limit build at start. 0 : Disabled 1 : Enabled	1 (0, 1)	647

◆ L8: Drive Protection

No. (Hex.)	Name	Description	Default (Range)	Ref.
L8-02 (04AE) Expert	Overheat Alarm Level	V/f OLV CLV CLV/PM Sets the *oH* detection level in temperature.	Determined by o2-04 (50 - 150 °C)	647
L8-03 (04AF) Expert	Overheat Pre-Alarm Selection	V/f OLV CLV CLV/PM Sets drive operation when an *oH* alarm is detected. 0 : Ramp to Stop 1 : Coast to Stop 2 : Emergency Stop (Use C1-09) 3 : Alarm Only	3 (0 - 3)	647
L8-05 (04B1)	Input Phase Loss Protection Sel	V/f OLV CLV CLV/PM Sets the function to enable and disable input phase loss detection. 0 : Disabled 1 : Enabled 2 : Enable During Run 3 : Enable at Constant Speed	Determined by o2-04 (0 - 3)	648
L8-06 (04B2) Expert	Input Phase Loss Detection Level	V/f OLV CLV CLV/PM Sets the level for input phase loss detection when there is a ripple in the DC bus. The drive detects *PF [Input Phase Loss]* if the difference between the maximum and the minimum values of the voltage ripple > *L8-06*. Detection level = 100% = Voltage class × √2	Determined by o2-04 (0.0 - 50.0%)	648
L8-07 (04B3)	Output Phase Loss Protection Sel	V/f OLV CLV CLV/PM Sets the function to enable and disable output phase loss detection. The drive detects *LF [Output Phase Loss]* if there is a phase loss on one (or more than one) of the U, V, or W phases on the output side. **Note:** • The drive can incorrectly start output phase loss detection in these conditions: –The motor rated current is very small compared to the drive rating. –The drive is operating a PM motor with a small load. • When *L8-07 = 1*, set these parameters: –*S1-02 [DC Injection Current at Start]* > 15% (when *A1-02 = 0, 2 [Conrtol Method Selection = V/f or OLV]*) –*S1-04 [DC Inj/Pos LockTime at Start]* > 100 ms If you set these parameters incorrectly, the drive can incorrectly start output phase loss detection. 0 : Disabled 1 : Enabled	0 (0, 1)	648
L8-09 (04B5) Expert	Output Ground Fault Detection	V/f OLV CLV CLV/PM Sets the function to enable and disable ground fault protection. 0 : Disabled 1 : Enabled	Determined by o2-04 (0, 1)	649

No. (Hex.)	Name	Description	Default (Range)	Ref.
L8-10 (04B6)	Heatsink Fan Operation Selection	V/f OLV CLV CLV/PM Sets operation of the heatsink cooling fan. 0 : During Run, w/ L8-11 Off-Delay 1 : Always On 2 : Temperature-Dependent Fan Ctrl.	0 (0 - 2)	649
L8-11 (04B7) Expert	Heatsink Fan Off-Delay Time	V/f OLV CLV CLV/PM Sets the length of time that the drive will wait before it stops the cooling fan after it cancels the Up/Down command when *L8-10 = 0 [Heatsink Fan Operation Selection = During Run, w/ L8-11 Off-Delay]*.	60 s (0 - 300 s)	649
L8-12 (04B8) Expert	Ambient Temperature Setting	V/f OLV CLV CLV/PM Sets the ambient temperature of the drive installation area.	40 °C (-10 - +50 °C)	649
L8-15 (04BB) Expert	Drive oL2 @ Low Speed Protection	V/f OLV CLV CLV/PM Sets the function to decrease the drive overload level at which the drive will trigger *oL2 [Drive Overload]* during low speed operation (6 Hz or slower) to prevent damage to the main circuit transistors. **Note:** Contact Yaskawa or your nearest sales representative before disabling this function at low speeds. If you frequently operate drives with high output current in low speed ranges, it can cause heat stress and decrease the life span of drive IGBTs. 0 : Disabled (No Additional Derate) 1 : Enabled (Reduced oL2 Level)	1 (0, 1)	649
L8-27 (04DD) Expert	Overcurrent Detection Gain	V/f OLV CLV CLV/PM Sets the PM motor overcurrent detection level as a percentage of the motor rated current value.	300.0% (0.0 - 1000.0%)	650
L8-29 (04DF) Expert	Output Unbalance Detection Sel	V/f OLV CLV CLV/PM Sets the function to detect *LF2 [Output Current Imbalance]*. 0 : Disabled 1 : Enabled	1 (0, 1)	650
L8-35 (04EC) Expert	Installation Method Selection	V/f OLV CLV CLV/PM Sets the type of drive installation. 0 : IP20/OpenChassis Enc/Ex Heatsink	0 (0)	650
L8-38 (04EF)	Automatic Torque Boost Function	V/f OLV CLV CLV/PM Sets the operation of Automatic Torque Boost function. When the output current, integrated overload value, or heatsink temperature are more than a specified level, the drive increases the output current limit and decreases the carrier frequency. When you set this parameter to *0 [Disabled]* to give priority to operations with low audible noise, select a larger capacity drive to prevent insufficient torque if necessary. Usually it is not necessary to change this setting. 0 : Disabled 3 : Enabled	3 (0, 3)	651
L8-39 (04F0) Expert	Reduced Carrier Frequency	V/f OLV CLV CLV/PM Sets the decreased carrier frequency used by Automatic Torque Boost function.	Determined by o2-04 (2.0 - Determined by o2-04 kHz)	651
L8-55 (045F) Expert	Internal DB TransistorProtection	V/f OLV CLV CLV/PM Sets the protection function for the internal braking transistor. 0 : RF Disabled/BOL Disabled 1 : RF Enabled/BOL Enabled 2 : RF Disabled/BOL Enabled	1 (0 - 2)	651
L8-88 (02F5) Expert	Safe Disable Operation Mode	V/f OLV CLV CLV/PM Sets the drive operation when the Safe Disable input is activated. 0 : Mode 0 (Alarm-On, Ready-Off) 1 : Mode 1 (Alarm-Off, Ready-On)	1 (0, 1)	652
L8-89 (0B97) Expert	Current Monitoring Selection	V/f OLV CLV CLV/PM Sets the Current Monitoring function. 0 : Disabled 1 : Enabled	0 (0, 1)	652
L8-99 (0B98) Expert	Current Monitoring Level	V/f OLV CLV CLV/PM Sets the current monitoring level as a percentage of the continuous rated output current.	10.0% (0.0 - 50.0%)	652

11.12 n: Special Adjustment

◆ n1: Hunting Prevention

No. (Hex.)	Name	Description	Default (Range)	Ref.
n1-01 (0580) Expert	Hunting Prevention Selection	V/f OLV CLV CLV/PM Sets the function to prevent hunting. 0 : Disabled 1 : Enabled (Normal) 2 : Enabled (High Carrier Frequency)	2 (0 - 2)	654
n1-08 (1105) Expert	Current Detection Method	V/f OLV CLV CLV/PM Sets how the drive decreases the motor vibration that is caused by leakage current. Usually it is not necessary to change this setting. 0 : 2-Phases 1 : 3-Phases	1 (0, 1)	654
n1-16 (0BFB) Expert	Hunting Prevention High Fc Gain	V/f OLV CLV CLV/PM Sets the gain for the hunting prevention function. This parameter functions best with a high carrier frequency. Usually it is not necessary to change this setting.	0.50 (0.00 - 2.50)	654
n1-17 (0BFC) Expert	Hunting Prevent High Fc Filter	V/f OLV CLV CLV/PM Sets the responsiveness of the hunting prevention function. Usually it is not necessary to change this setting.	500 ms (0 - 1000 ms)	654

◆ n2: Auto Freq Regulator (AFR)

No. (Hex.)	Name	Description	Default (Range)	Ref.
n2-01 (0584) Expert	Automatic Freq Regulator Gain	V/f OLV CLV CLV/PM Sets the gain of the AFR function as a magnification value. Usually it is not necessary to change this setting.	1.00 (0.00 - 10.00)	655
n2-02 (0585) Expert	Automatic Freq Regulator Time 1	V/f OLV CLV CLV/PM Sets the time constant that sets the rate of change for the AFR function. Usually it is not necessary to change this setting.	50 ms (0 - 2000 ms)	655
n2-03 (0586) Expert	Automatic Freq Regulator Time 2	V/f OLV CLV CLV/PM Sets the time constant that sets the speed difference of the AFR function. Use this parameter for speed searches or regeneration. Usually it is not necessary to change this setting.	750 ms (0 - 2000 ms)	655

◆ n5: Feed Forward Control

No. (Hex.)	Name	Description	Default (Range)	Ref.
n5-01 (05B0) Expert	Feed Forward Control Selection	V/f OLV CLV CLV/PM Sets the feed forward function. 0 : Disabled 1 : Enabled	0 (0, 1)	656
n5-02 (05B1) Expert	Motor Inertia Acceleration Ramp	V/f OLV CLV CLV/PM Sets the length of time for the motor to accelerate from the stopped to the maximum frequency with a single motor at the rated torque.	Determined by o2-04 (0.001 - 10.000 s)	657
n5-03 (05B2) Expert	Feed Forward Control Gain	V/f OLV CLV CLV/PM Sets the ratio between load inertia and motor inertia.	1.00 (0.00 - 100.00)	657

◆ n6: Online Tuning

No. (Hex.)	Name	Description	Default (Range)	Ref.
n6-01 (0570) Expert	Online Tuning Selection	V/f OLV CLV CLV/PM Sets the type of motor data that Online Tuning uses for OLV control. 0 : Disabled 1 : Line-to-Line Resistance Tuning 2 : Voltage Correction Tuning	2 (0 - 2)	658
n6-05 (05C7) Expert	Online Tuning Gain	V/f OLV CLV CLV/PM Sets the compensation gain when *n6-01 = 2 [Online Tuning Selection = Voltage Correction Tuning]*. Usually it is not necessary to change this setting.	1.0 (0.1 - 50.0)	658

◆ n8: PM Motor Control Tuning

No. (Hex.)	Name	Description	Default (Range)	Ref.
n8-01 (0540) Expert	Pole Position Detection Current	V/f OLV CLV CLV/PM Sets the Initial Rotor Position Estimated Current as a percentage where *E5-03 [PM Motor Rated Current (FLA)]* = 100%. Usually it is not necessary to change this setting.	50% (0 - 100%)	659
n8-02 (0541) Expert	Pole Alignment Current Level	V/f OLV CLV CLV/PM Sets the current at the time of polar attraction as a percentage where *E5-03 [PM Motor Rated Current (FLA)]* = 100%. Usually it is not necessary to change this setting.	80% (0 - 150%)	659
n8-09 (0548) Expert	IniHarm Jdg Time	V/f OLV CLV CLV/PM Sets the judgment time for initial magnetic pole estimation. Usually it is not necessary to change this setting. When it is necessary to shorten the time, it is possible to shorten it in the range to avoid errors. **Note:** This parameter is available only for High Frequency Injection.	1000 ms (100 - 2000 ms)	659
n8-35 (0562) Expert	Initial Pole Detection Method	V/f OLV CLV CLV/PM Sets how the drive detects the position of the rotor at start. 1 : High Frequency Injection 2 : Pulse Injection	1 (0, 1)	660
n8-36 (0563) Expert	HFI Frequency Level for L Tuning	V/f OLV CLV CLV/PM Sets the injection frequency for high frequency injection. **Note:** Set *n8-35 = 1 [Initial Pole Detection Method = High Frequency Injection]* to enable this parameter.	500 Hz (25 - 1000 Hz)	660
n8-37 (0564) Expert	HFI Voltage Amplitude Level	V/f OLV CLV CLV/PM Sets the high frequency injection amplitude as a percentage where 200 V = 100% for 200 V class drives and 400 V = 100% for a 400 V class drives. Usually it is not necessary to change this setting. **Note:** Set *n8-35 = 1 [Initial Pole Detection Method = High Frequency Injection]* to enable this parameter.	20.0% (0.0 - 99.9%)	660
n8-41 (0568) Expert	HFI P Gain	V/f OLV CLV CLV/PM Sets the response gain for the high frequency injection speed estimation. **Note:** Set *n8-35 = 1 [Initial Pole Detection Method = High Frequency Injection]* to enable this parameter.	2.5 (-10.0 - +10.0)	660
n8-42 (0569) Expert	HFI I Time	V/f OLV CLV CLV/PM Sets the integral time constant for the high frequency injection speed estimation. Usually it is not necessary to change this setting.	0.00 s (0.00 - 9.99 s)	660
n8-62 (057D) Expert	Output Voltage Limit Level	V/f OLV CLV CLV/PM Sets the output voltage limit to prevent saturation of the output voltage. Usually it is not necessary to change this setting.	200 V Class: 200.0 V, 400 V Class: 400.0 V (200 V Class: 0.0 - 240.0 V, 400 V Class: 0.0 - 480.0 V)	661
n8-81 (02D0) Expert	High Freq Injection @ Rescue	V/f OLV CLV CLV/PM Sets the frequency used for High Frequency Injection during Rescue Operation.	130 Hz (25 - 1000 Hz)	661
n8-82 (02D1) Expert	HighFreq Inject Amplitude@Rescue	V/f OLV CLV CLV/PM Sets the amplitude for High Frequency Injection during Rescue Operation as a percentage of the voltage class.	15.0% (0.1 - 99.9%)	661

No. (Hex.)	Name	Description	Default (Range)	Ref.
n8-84 (02D3) Expert	Polarity Detection Current	V/f OLV CLV CLV/PM Sets the current that the drive uses to estimate the initial motor magnetic pole as a percentage where *E5-03 [PM Motor Rated Current (FLA)] = 100%.* **Note:** The default setting changes when *C6-23 [Carrier Frequency @ Pole Search]* changes: • *C6-23 = 0 [2 kHz]*: 100% • *C6-23 = 1 [Use the value set to C6-03]*: 120%	Determined by C6-23 (0 - 150%)	661
n8-86 (02D5) Expert	Pole Search Error Detection Sel	V/f OLV CLV CLV/PM Sets the function to enable and disable the Initial Pole Search error detection. 0 : Disabled 1 : Enabled	0 (0, 1)	661

◆ nA: PM Motor Control Tuning

No. (Hex.)	Name	Description	Default (Range)	Ref.
nA-04 (1BF5) Expert	Vout Limit Iq Change Width	V/f OLV CLV CLV/PM Sets the changing width of the q-axis current reference based on the d-axis current reference as a percentage of the motor rated current. Usually it is not necessary to change this setting. **Note:** If *b8-01 = 0 [Energy Saving Control Selection = Disabled]* and there is shock when the output voltage is limited, change this parameter to decrease the shock.	-10% (-20 - 0%)	662
nA-05 (312E) Expert	HFI P Gain @ Rescue	V/f OLV CLV CLV/PM Sets the response gain for the high frequency injection speed estimation at Rescue Operation. Usually it is not necessary to change this setting. **Note:** Set *n8-35 = 1 [Initial Pole Detection Method = High Frequency Injection]* to enable this parameter.	2.5 (-10.0 - +10.0)	662
nA-06 (312F) Expert	HFI I Time @ Rescue	V/f OLV CLV CLV/PM Sets the integral time constant for the high frequency injection speed estimation at Rescue Operation. Usually it is not necessary to change this setting. **Note:** Set *n8-35 = 1 [Initial Pole Detection Method = High Frequency Injection]* to enable this parameter.	0.00 (0.00 - 9.99)	662

11.13 o: Keypad-Related Settings

◆ o1: Keypad Display

No. (Hex.)	Name	Description	Default (Range)	Ref.
o1-01 (0500) RUN Expert	User Monitor Selection	V/f OLV CLV CLV/PM Sets the *U monitor* for the Drive Mode. This parameter is only available when you use an LED keypad.	106 (104 - 999)	663
o1-02 (0501) RUN Expert	Monitor Selection at Power-up	V/f OLV CLV CLV/PM Sets the monitor item that the keypad screen shows after you energize the drive. Refer to “U: Monitors” for information about the monitor items that the keypad screen can show. This parameter is only available when you use an LED keypad. 1 : Speed Reference (U1-01) 2 : Direction 3 : Output Speed (U1-02) 4 : Output Current (U1-03) 5 : User Monitor (o1-01)	1 (1 - 5)	663
o1-03 (0502)	Speed Display Unit Selection	V/f OLV CLV CLV/PM Sets the display units for the speed reference and output speed. 0 : 0.01 Hz 1 : 0.01% (100% = E1-04) 2 : Revolutions Per Minute (RPM) 3 : User Units (o1-10 & o1-11) 4 : Elevator Unit1 - m/s, s, s 5 : Elevator Unit2 - m/(s, s^2, s^3) 6 : Elevator Unit3-ft/(min,s^2,s^3)	1 (0 - 6)	664
o1-04 (0503) Expert	V/f Pattern Display Unit	V/f OLV CLV CLV/PM Sets the setting units for parameters that set the V/f pattern frequency. 0 : Hz 1 : Revolutions Per Minute (RPM)	Determined by A1-02 (0, 1)	664
o1-05 (0504) RUN Expert	LCD Contrast Adjustment	V/f OLV CLV CLV/PM Sets the contrast of the LCD display on the keypad.	5 (0 - 10)	665
o1-10 (0520) Expert	User Units Maximum Value	V/f OLV CLV CLV/PM Sets the value that the drive shows as the maximum output speed.	6000 (1 - 60000)	665
o1-11 (0521) Expert	User Units Decimal Position	V/f OLV CLV CLV/PM Sets the number of decimal places for speed reference and monitor values. 0 : No Decimal Places (XXXXX) 1 : One Decimal Places (XXXX.X) 2 : Two Decimal Places (XXX.XX) 3 : Three Decimal Places (XX.XXX)	2 (0 - 3)	665
o1-12 (0739)	Length Units	V/f OLV CLV CLV/PM Sets the units used for distance control and for the sheave diameter. 0 : Millimeter Units 1 : Inch Units **Note:** This parameter changes the units of these parameters: • *o1-20 [Sheave Diameter]* • *S5-11 [Deceleration Distance@High Speed]* • *S5-12 [Up Stopping Distance]* • *U4-42 [Remaining Distance]* • *U4-43 [Min.Dec.Distance (H)]* • *U4-44 [Min.Stop Distance]*	0 (0, 1)	665
o1-18 (1205)	Speed of Elevator Car	V/f OLV CLV CLV/PM Sets the car speed at which the elevator will travel. Usually it is Nominal Speed. **Note:** The default setting will change when you set the speed units to ft/min (*o1-03 = 6*). The setting range will be 0.0 ft/min to 2000.0 ft/min.	0.00 m/s (0.00 - 10.00 m/s)	666
o1-19 (1206)	Elevator Motor Speed	V/f OLV CLV CLV/PM Sets the motor speed that corresponds to the value set in *o1-18 [Speed of Elevator Car]*. **Note:** This parameter does not refer to a physically-driven speed. It is used to scale the speed displays or *d1-xx* upper limits in lift units.	0.00 rpm (0.00 - 6000.0 rpm)	666

No. (Hex.)	Name	Description	Default (Range)	Ref.
o1-20 (0575)	Sheave Diameter	V/f OLV CLV CLV/PM Sets the traction sheave diameter for display unit calculations. **Note:** When *o1-12 = 1 [Length Units = Inch Units]*, the default setting is 15.70 in, and the setting range is 3.00 in to 78.00 in.	400 mm (80 - 2000 mm)	666
o1-21 (0576)	Roping Ratio	V/f OLV CLV CLV/PM Sets the roping ratio. 1 : 1:1 2 : 2:1 3 : 3:1 4 : 4:1	2 (1 - 4)	666
o1-22 (0577)	Mechanical Gear Ratio	V/f OLV CLV CLV/PM Sets the ratio of the gear installed for display unit calculations.	Determined by A1-02 (0.10 - 100.00)	666
o1-23 (0174) Expert	Safe Torque Off Display Select	V/f OLV CLV CLV/PM Sets the function to hide *STo [Safe Torque OFF]* on the keypad during safety input. 0 : Disabled 1 : Enabled	0 (0, 1)	667
o1-24 (11AD) RUN	Custom Monitor 1	V/f OLV CLV CLV/PM You can select a maximum of 12 monitors as user monitors and set them to parameters *o1-24* to *o1-35*. This parameter sets the user monitor to show on the first line.	101 (0, 101 - 999)	667
o1-25 (11AE) RUN	Custom Monitor 2	V/f OLV CLV CLV/PM You can select a maximum of 12 monitors as user monitors and set them to parameters *o1-24* to *o1-35*. This parameter sets the user monitor to show on the second line.	Determined by A1-02 (0,101 - 999)	667
o1-26 (11AF) RUN	Custom Monitor 3	V/f OLV CLV CLV/PM You can select a maximum of 12 monitors as user monitors and set them to parameters *o1-24* to *o1-35*. This parameter sets the user monitor to show on the third line.	103 (0,101 - 999)	667
o1-27 (11B0) RUN	Custom Monitor 4	V/f OLV CLV CLV/PM You can select a maximum of 12 monitors as user monitors and set them to parameters *o1-24* to *o1-35*. This parameter sets the user monitor to show on the fourth line.	Determined by A1-02 (0,101 - 999)	667
o1-28 (11B1) RUN	Custom Monitor 5	V/f OLV CLV CLV/PM You can select a maximum of 12 monitors as user monitors and set them to parameters *o1-24* to *o1-35*. This parameter sets the user monitor to show on the fifth line.	112 (0, 101 - 999)	667
o1-29 (11B2) RUN	Custom Monitor 6	V/f OLV CLV CLV/PM You can select a maximum of 12 monitors as user monitors and set them to parameters *o1-24* to *o1-35*. This parameter sets the user monitor to show on the sixth line.	106 (0,101 - 999)	667
o1-30 (11B3) RUN	Custom Monitor 7	V/f OLV CLV CLV/PM You can select a maximum of 12 monitors as user monitors and set them to parameters *o1-24* to *o1-35*. This parameter sets the user monitor to show on the seventh line.	107 (0,101 - 999)	667
o1-31 (11B4) RUN	Custom Monitor 8	V/f OLV CLV CLV/PM You can select a maximum of 12 monitors as user monitors and set them to parameters *o1-24* to *o1-35*. This parameter sets the user monitor to show on the eighth line.	Determined by A1-02 (0,101 - 999)	667
o1-32 (11B5) RUN	Custom Monitor 9	V/f OLV CLV CLV/PM You can select a maximum of 12 monitors as user monitors and set them to parameters *o1-24* to *o1-35*. This parameter sets the user monitor to show on the ninth line.	413 (0,101 - 999)	667
o1-33 (11B6) RUN	Custom Monitor 10	V/f OLV CLV CLV/PM You can select a maximum of 12 monitors as user monitors and set them to parameters *o1-24* to *o1-35*. This parameter sets the user monitor to show on the tenth line.	140 (0, 101 - 999)	667
o1-34 (11B7) RUN	Custom Monitor 11	V/f OLV CLV CLV/PM You can select a maximum of 12 monitors as user monitors and set them to parameters *o1-24* to *o1-35*. This parameter sets the user monitor to show on the eleventh line.	141 (0,101 - 999)	667
o1-35 (11B8) RUN	Custom Monitor 12	V/f OLV CLV CLV/PM You can select a maximum of 12 monitors as user monitors and set them to parameters *o1-24* to *o1-35*. This parameter sets the user monitor to show on the twelfth line.	111 (0, 101 - 999)	667
o1-36 (11B9) RUN	LCD Backlight Brightness	V/f OLV CLV CLV/PM Sets the intensity of the LCD keypad backlight.	3 (1 - 5)	667
o1-37 (11BA) RUN	LCD Backlight ON/OFF Selection	V/f OLV CLV CLV/PM Sets the automatic shut off function for the LCD backlight. 0 : OFF 1 : ON	1 (0, 1)	668

No. (Hex.)	Name	Description	Default (Range)	Ref.
o1-38 (11BB) RUN Expert	LCD Backlight Off-Delay	V/f OLV CLV CLV/PM Sets the time until the LCD backlight automatically turns off.	300 s (10 - 600 s)	668
o1-39 (11BC) RUN Expert	Show Initial Setup Screen	V/f OLV CLV CLV/PM Sets the function to show the LCD keypad initial setup screen each time you energize the drive. This parameter is only available when you use an LCD keypad. 0 : No 1 : Yes	1 (0, 1)	668
o1-58 (3125)	Motor Power Unit Selection	V/f OLV CLV CLV/PM Sets the setting units for parameters that set the motor rated power. 0 : kW 1 : HP	0 (0, 1)	668

◆ o2: Keypad Operation

No. (Hex.)	Name	Description	Default (Range)	Ref.
o2-01 (0505) Expert	LO/RE Key Function Selection	V/f OLV CLV CLV/PM Sets the function that lets you use LO/RE to switch between LOCAL and REMOTE Modes. 0 : Disabled 1 : Enabled	0 (0, 1)	669
o2-02 (0506) Expert	STOP Key Function Selection	V/f OLV CLV CLV/PM Sets the function to use STOP on the keypad to stop the drive when the Up/Down command source for the drive is REMOTE (external) and not assigned to the keypad. 0 : Disabled 1 : Enabled	0 (0, 1)	669
o2-03 (0507) Expert	User Parameter Default Value	V/f OLV CLV CLV/PM Sets the function to keep the settings of changed parameters as user parameter defaults to use during initialization. 0 : No change 1 : Set defaults 2 : Clear all	0 (0 - 2)	669
o2-04 (0508) Expert	Drive Model (KVA) Selection	V/f OLV CLV CLV/PM Sets the Drive Model code. Set this parameter after replacing the control board.	0 Determined by the drive (-)	670
o2-06 (050A) Expert	Keypad Disconnect Detection	V/f OLV CLV CLV/PM Sets the function that stops the drive if you disconnect the keypad connection cable from the drive or if you damage the cable while the keypad is the Up/Down command source. 0 : Disabled 1 : Enabled	0 (0, 1)	670
o2-09 (050D) Expert	Reserved	-	-	671
o2-23 (11F8) RUN Expert	External 24V Powerloss Detection	V/f OLV CLV CLV/PM Sets the function to give a warning if the backup external 24 V power supply turns off when the main circuit power supply is in operation. 0 : Disabled 1 : Enabled	0 (0, 1)	671
o2-26 (1563) Expert	Alarm Display at Ext. 24V Power	V/f OLV CLV CLV/PM When you connect a backup external 24 V power supply, this parameter sets the function to trigger an alarm when the main circuit power supply voltage decreases. **Note:** The drive will not run when it is operating from one 24-V external power supply. 0 : Disabled 1 : Enabled	0 (0, 1)	671

◆ o3: Copy Keypad Function

No. (Hex.)	Name	Description	Default (Range)	Ref.
o3-01 (0515)	Copy Keypad Function Selection	V/f OLV CLV CLV/PM Sets the function that saves and copies drive parameters to a different drive with the keypad. 0 : Copy Select 1 : Backup (drive → keypad) 2 : Restore (keypad → drive) 3 : Verify (check for mismatch)	0 (0 - 3)	671
o3-02 (0516)	Copy Allowed Selection	V/f OLV CLV CLV/PM Sets the copy function when *o3-01 = 1 [Copy Keypad Function Selection = Backup (drive → keypad)]*. 0 : Disabled 1 : Enabled	0 (0, 1)	672
o3-04 (0B3E)	Select Backup/Restore Location	V/f OLV CLV CLV/PM Sets the storage location for drive parameters when you back up and restore parameters. This parameter is only available when you use an LCD keypad. 0 : Memory Location 1 1 : Memory Location 2 2 : Memory Location 3 3 : Memory Location 4	0 (0 - 3)	672
o3-06 (0BDE) Expert	Auto Parameter Backup Selection	V/f OLV CLV CLV/PM Sets the function that automatically backs up parameters. This parameter is only available when you use an LCD keypad. 0 : Disabled 1 : Enabled	1 (0, 1)	672
o3-07 (0BDF) Expert	Auto Parameter Backup Interval	V/f OLV CLV CLV/PM Sets the interval at which the automatic parameter backup function saves parameters from the drive to the keypad. **Note:** This parameter is only available when you use an LCD keypad. 0 : Every 10 minutes 1 : Every 30 minutes 2 : Every 60 minutes 3 : Every 12 hours	1 (0 - 3)	672

◆ o4: Maintenance Monitors

No. (Hex.)	Name	Description	Default (Range)	Ref.
o4-01 (050B) Expert	Elapsed Operating Time Setting	V/f OLV CLV CLV/PM Sets the initial value of the cumulative drive operation time in 10-hour units.	0 h (0 - 9999 h)	675
o4-02 (050C) Expert	Elapsed Operating Time Selection	V/f OLV CLV CLV/PM Sets the condition that counts the cumulative operation time. 0 : U4-01 Shows Total Power-up Time 1 : U4-01 Shows Total RUN Time	0 (0, 1)	676
o4-03 (050E) Expert	Fan Operation Time Setting	V/f OLV CLV CLV/PM Sets the value from which to start the cumulative drive cooling fan operation time in 10-hour units.	0 h (0 - 9999 h)	676
o4-05 (051D) Expert	Capacitor Maintenance Setting	V/f OLV CLV CLV/PM Sets the *U4-05 [CapacitorMaintenance]* monitor value.	0% (0 - 150%)	676
o4-07 (0523) Expert	Softcharge Relay Maintenance Set	V/f OLV CLV CLV/PM Sets the *U4-06 [PreChargeRelayMainte]* monitor value.	0% (0 - 150%)	676
o4-09 (0525) Expert	IGBT Maintenance Setting	V/f OLV CLV CLV/PM Sets the *U4-07 [IGBT Maintenance]* monitor value.	0% (0 - 150%)	676
o4-11 (0510) Expert	Fault Trace/History Initialize	V/f OLV CLV CLV/PM Resets the records of monitors *U2-xx [Fault Trace]*, *U3-xx [Fault History]*, and *U9-xx [Fault Trace]*. 0 : Disabled 1 : Enabled	0 (0, 1)	677

No. (Hex.)	Name	Description	Default (Range)	Ref.
o4-12 (0512) Expert	kWh Monitor Initialization	V/f OLV CLV CLV/PM Resets the monitor values for *U4-10 [kWh, Lower 4 Digits]* and *U4-11 [kWh, Upper 5 Digits]*. 0 : No Reset 1 : Reset	0 (0, 1)	677
o4-13 (0528) Expert	Number of Travels Counter Reset	V/f OLV CLV CLV/PM Resets the monitor values for *U4-24 [Number of Travels (Low)]* and *U4-25 [Number of Travels (High)]*. 0 : No Reset 1 : Reset	0 (0, 1)	677
o4-15 (0537) Expert	Maintenance Alarm Snooze Period	V/f OLV CLV CLV/PM Sets the snooze period of maintenance alarms as a percentage of the lifetime of the component. After a maintenance alarm output has been triggered and the alarm is reset, this parameter determines the level that will trigger the next alarm for the same component. The same alarm will be triggered by the detection level that triggered the original alarm, plus the level set in *o4-15*. **Note:** Parameter *A1-03 [Initialize Parameters]* does not initialize this parameter.	2% (0 - 20%)	677
o4-16 (0176) Expert	Maintenance Monitoring Selection	V/f OLV CLV CLV/PM Sets the function to use bit 0 to bit 3 to 1 (ON) or 0 (OFF) to enable and disable four Maintenance Monitors. From left to right, the digits set *LT-4 [IGBT Maintenance Time]*, *LT-3 [SoftChargeBypassRelay MainteTime]*, *LT-2 [Capacitor Maintenance Time]*, and *LT-1 [Cooling Fan Maintenance Time]* in order. **Note:** Parameter *A1-03 [Initialize Parameters]* does not initialize this parameter. All bits = 0 : Maintenance Monitors are disabled bit 0 : LT1 (cooling fan) bit 1 : LT2 (DC bus capacitors) bit 2 : LT3 (soft-charge bypass relay) bit 3 : LT4 (IGBT)	1000 (0000 - 1111)	678
o4-22 (154F) RUN	Time Format	V/f OLV CLV CLV/PM Sets the time display format. This parameter is only available when you use an LCD keypad. 0 : 24 Hour Clock 1 : 12 Hour Clock 2 : 12 Hour JP Clock	0 (0 - 2)	678
o4-23 (1550) RUN	Date Format	V/f OLV CLV CLV/PM Sets the date display format. This parameter is only available when you use an LCD keypad. 0 : YYYY/MM/DD 1 : DD/MM/YYYY 2 : MM/DD/YYYY	0 (0 - 2)	678
o4-24 (310F) RUN Expert	bAT Detection Selection	V/f OLV CLV CLV/PM Sets operation when the drive detects *bAT [Keypad Battery Low Voltage]* and *TiM [Keypad Time Not Set]*. 0 : Disable 1 : Enable (Alarm Detected) 2 : Enable (Fault Detected)	0 (0 - 2)	678
o4-40 (303D)	Travel Direct Change CounterEnbl	V/f OLV CLV CLV/PM Sets the function to enable the Travel Direction Change Counter. **Note:** DriveWizard does not show this parameter. 0 : Disabled 1 : Enabled	0 (0, 1)	679
o4-41 (303E)	Travel Direct Counter AlarmLevel	V/f OLV CLV CLV/PM Sets the detection level for *TCA [TDCC Alarm]* in units of 1000 direction changes. When you want to set to one million direction changes, set this parameter = 1000. **Note:** DriveWizard does not show this parameter.	50 (0 - 10000)	679

No. (Hex.)	Name	Description	Default (Range)	Ref.
o4-42 (303F)	TravelDirectChange Cnt PresetLvl	V/f OLV CLV CLV/PM Sets the number of allowable direction changes after a rope change in units of 1000 direction changes. When you want to set to one million direction changes, set this parameter = 1000. The direction counter is set to the input value and the parameter is changed back to 0. **Note:** DriveWizard does not show this parameter.	0 (0 - 65535)	679
o4-44 (3041)	Travel Direct ChgCntr Passwd Set	V/f OLV CLV CLV/PM Sets the password to use the Travel Direction Change Counter. You must enter the password identically two times. The active password locks parameters *o4-40 [Travel Direct Change CounterEnbl]* to *o4-42 [TravelDirectChange Cnt PresetLvl]* from editing and starts the Travel Direction Change counting process. You must enable *o4-40* before you set the password. When you enter the same password again, the drive unlocks the parameters again. **Note:** • DriveWizard does not show this parameter. • This parameter always resets to 0 after a user input. • If you set *o4-40 = 1 [Enabled]*, but you do not define the password, the drive detects *TCS [TDCC Setup]*. This alarm has higher priority than *TCA [TDCC Alarm]*.	0 (0 - FFFF)	679

◆ o5: Log Function

No. (Hex.)	Name	Description	Default (Range)	Ref.
o5-01 (1551) RUN Expert	Log Start/Stop Selection	V/f OLV CLV CLV/PM Sets the data log function. This parameter is only available when you use an LCD keypad. 0 : OFF 1 : ON	0 (0, 1)	682
o5-02 (1552) RUN Expert	Log Sampling Interval	V/f OLV CLV CLV/PM Sets the data log sampling cycle. This parameter is only available when you use an LCD keypad.	100 ms (100 - 60000 ms)	682
o5-03 (1553) RUN Expert	Log Monitor Data 1	V/f OLV CLV CLV/PM Sets the data log monitor. This parameter is only available when you use an LCD keypad.	101 (000, 101 - 999)	682
o5-04 (1554) RUN Expert	Log Monitor Data 2	V/f OLV CLV CLV/PM Sets the data log monitor. This parameter is only available when you use an LCD keypad.	102 (000, 101 - 999)	682
o5-05 (1555) RUN Expert	Log Monitor Data 3	V/f OLV CLV CLV/PM Sets the data log monitor. This parameter is only available when you use an LCD keypad.	103 (000, 101 - 999)	683
o5-06 (1556) RUN Expert	Log Monitor Data 4	V/f OLV CLV CLV/PM Sets the data log monitor. This parameter is only available when you use an LCD keypad.	107 (000, 101 - 999)	683
o5-07 (1557) RUN Expert	Log Monitor Data 5	V/f OLV CLV CLV/PM Sets the data log monitor. This parameter is only available when you use an LCD keypad. **Note:** The default setting changes when *A1-02 [Control Method Selection]* changes: • *A1-02 = 0, 2 [V/f, OLV]*: 000 • *A1-02 = 3, 7 [CLV, CLV/PM]*: 109	Determined by A1-02 (000, 101 - 999)	683
o5-08 (1558) RUN Expert	Log Monitor Data 6	V/f OLV CLV CLV/PM Sets the data log monitor. This parameter is only available when you use an LCD keypad. **Note:** The default setting changes when *A1-02 [Control Method Selection]* changes: • *A1-02 = 0, 2 [V/f, OLV]*: 116 • *A1-02 = 3, 7 [CLV, CLV/PM]*: 105	Determined by A1-02 (000, 101 - 999)	683
o5-09 (1559) RUN Expert	Log Monitor Data 7	V/f OLV CLV CLV/PM Sets the data log monitor. This parameter is only available when you use an LCD keypad.	110 (000, 101 - 999)	684

No. (Hex.)	Name	Description	Default (Range)	Ref.
o5-10 (155A) RUN Expert	Log Monitor Data 8	V/f OLV CLV CLV/PM Sets the data log monitor. This parameter is only available when you use an LCD keypad.	112 (000, 101 - 999)	684
o5-11 (155B) RUN Expert	Log Monitor Data 9	V/f OLV CLV CLV/PM Sets the data log monitor. This parameter is only available when you use an LCD keypad.	0 (000, 101 - 999)	684
o5-12 (155C) RUN Expert	Log Monitor Data 10	V/f OLV CLV CLV/PM Sets the data log monitor. This parameter is only available when you use an LCD keypad.	0 (000, 101 - 999)	684

11.14 S: Elevator Parameters

◆ S1: Brake/Contactor Sequence

No. (Hex.)	Name	Description	Default (Range)	Ref.
S1-01 (0680)	Zero Speed Level at Stop	V/f OLV CLV CLV/PM Sets the speed to begin applying DC Injection (or Position Lock) when *b1-03 = 0 [Stopping Method Selection = Ramp to Stop]* as a percentage of *E1-04 [Maximum Output Frequency]*.	Determined by A1-02 (0.000 - 9.999%)	685
S1-02 (0681)	DC Injection Current at Start	V/f OLV CLV CLV/PM Sets the amount of current to use for DC Injection at start as a percentage of the continuous rated output current.	57% (0 - 100%)	685
S1-03 (0682)	DC Injection Current at Stop	V/f OLV CLV CLV/PM Sets the amount of current to use for DC Injection at stop as a percentage of the continuous rated output current.	57% (0 - 100%)	686
S1-04 (0683)	DC Inj/Pos Lock Time at Start	V/f OLV CLV CLV/PM Sets the length of time that the drive will do DC Injection at start. When *A1-02 = 3 or 7 [Control Method Selection = CLV or CLV/PM]*, this parameter sets the length of time that the drive will do Position Lock at start. This parameter is disabled when set to *0.00 s*.	Determined by A1-02 (0.00 - 10.00 s)	686
S1-05 (0684)	DC Inj/Pos Lock Time at Stop	V/f OLV CLV CLV/PM Sets the length of time that the drive will do DC Injection at stop. When *A1-02 = 3 or 7 [Control Method Selection = CLV or CLV/PM]*, this parameter sets the length of time that the drive will do Position Lock at stop. This parameter is disabled when set to *0.00 s*.	0.60 s (0.00 - 10.00 s)	686
S1-06 (0685)	Brake Release Delay Time	V/f OLV CLV CLV/PM Sets the delay time between the start of DC injection/Position Lock and the activation of an MFDO terminal set for *H2-xx = 50 [MFDO Function Selection = Brake Control]* to release the brake at the beginning of the ride.	0.20 s (0.00 - 10.00 s)	686
S1-07 (0686)	Brake Close Delay Time	V/f OLV CLV CLV/PM Sets the delay time between reaching Zero Speed set in *S1-01 [Zero Speed Level at Stop]* and the deactivation of an MFDO terminal set for *H2-xx = 50 [MFDO Function Selection = Brake Control]* to apply the brake at the end of the ride. **Note:** The maximum value for this parameter is the value set in *S1-05 [DC Inj/Pos Lock Time at Stop]*. If you set *S1-05 < S1-07*, the drive detects *oPE21 [Elevator Parameter Setting Fault]*.	0.10 s (0.00 s - S1-05)	686
S1-10 (0687)	Up/Down Command Delay Time	V/f OLV CLV CLV/PM Sets the delay time until the drive starts operation after it receives an Up/Down command. You must set enough time for the motor contactor on the output side to be active.	0.10 s (0.00 - 1.00 s)	686
S1-11 (0688)	Output Contactor Open Delay Time	V/f OLV CLV CLV/PM Sets the delay time to deactivate an MFDO terminal set for *H2-xx = 51 [MFDO Function Selection = Output Contactor Control]* to release the motor contactor after the drive stops and shuts off the output.	0.10 s (0.00 - 1.00 s)	686
S1-12 (06E0)	Output Contactor During Autotune	V/f OLV CLV CLV/PM Sets the function to automatically activate an MFDO terminal set for *H2-xx = 51 [Output Contactor Control]* when the drive starts Auto-Tuning. 0 : Disable 1 : Enable 2 : Enabled during A-Tuning and STo	0 (0 - 2)	687
S1-26 (06D7)	Emergency Stop Start Level	V/f OLV CLV CLV/PM Sets the Emergency Stop Start Level as a percentage of *E1-04 [Maximum Output Frequency]*.	10.0% (0.0 - 100.0%)	687

◆ S2: Elevator Slip Compensation

No. (Hex.)	Name	Description	Default (Range)	Ref.
S2-01 (068F)	Motor Rated Speed	V/f OLV CLV CLV/PM Sets the motor rated speed.	1380 rpm (300 - 1800 rpm)	687
S2-02 (0690) RUN	Slip Comp Gain during Motoring	V/f OLV CLV CLV/PM Sets the slip compensation for leveling speed during motoring. This can help improve the accuracy of leveling.	0.7 (0.0 - 5.0)	687
S2-03 (0691) RUN	Slip Comp Gain during Regen	V/f OLV CLV CLV/PM Sets the slip compensation for leveling speed during regeneration. This can help improve the accuracy of leveling.	1.0 (0.0 - 5.0)	688

No. (Hex.)	Name	Description	Default (Range)	Ref.
S2-05 (0693)	Slip Comp Torq Detect Delay Time	V/f OLV CLV CLV/PM Sets a delay time before detecting torque for slip compensation.	1000 ms (0 - 10000 ms)	688
S2-06 (0694)	Slip Comp Torq Detect FilterTime	V/f OLV CLV CLV/PM Sets the filter time constant applied to the torque signal used for the slip compensation value calculation.	500 ms (0 - 2000 ms)	688

◆ S3: Start/Stop Optimization

No. (Hex.)	Name	Description	Default (Range)	Ref.
S3-02 (0698) RUN	Position Lock Gain 2 at Start	V/f OLV CLV CLV/PM Sets gain level 2 for the Position Lock at start function. Position Lock at start compensates the motor torque to keep the car position to prevent rollback when the brake is released.	Determined by A1-02 (0.00 - 100.00)	688
S3-03 (0699) RUN	Position Lock Gain at Stop	V/f OLV CLV CLV/PM Sets the Position Lock gain at stop. Position Lock at stop compensates the motor torque to keep the car position until the brake is fully applied.	5 (0 - 100)	688
S3-04 (069A)	Position Lock Bandwidth	V/f OLV CLV CLV/PM Sets the bandwidth around the stop position in which an MFDO terminal set for *H2-xx = 33 [Zero Servo Complete]* activates.	10 (0 - 16383)	689
S3-10 (069B) Expert	Torque Compensation Ramp Time	V/f OLV CLV CLV/PM Sets a time constant for the torque reference to reach 300%. This parameter is enabled when *H3-xx = 14 [MFAI Function Selection = Torque Compensation]*.	500 ms (0 - 5000 ms)	689
S3-11 (069C) Expert	Id Bias	V/f OLV CLV CLV/PM Sets the motor d-axis current flowing during startup in 0.1% increments as a percentage of the motor rated current.	5.0% (0.0 - 100.0%)	689
S3-12 (069D) Expert	Torque Comp. Bias in Down Direct	V/f OLV CLV CLV/PM Sets the bias added to torque compensation value from the load cell when the elevator car moves downward as a percentage of the motor rated torque in 0.1% increments.	0.0% (-40.0 - +40.0%)	689
S3-14 (069F) Expert	Torque Comp Fadeout Speed	V/f OLV CLV CLV/PM Sets the speed level for torque compensation to diminish during the time set in *S3-15 [Torque Comp Fadeout Time]*. This parameter is disabled when set to 0.0 Hz.	0.0 Hz (0.0 - 200.0 Hz)	689
S3-15 (06A0) Expert	Torque Comp Fadeout Time	V/f OLV CLV CLV/PM Sets the time for torque compensation to decrease when the motor speed is at the level set in *S3-14 [Torque Comp Fadeout Speed]*.	1000 ms (0 - 5000 ms)	689
S3-16 (06A1)	Torque Limit Reduction Time@Stop	V/f OLV CLV CLV/PM Sets the time to decrease the torque limit rate after Position Lock at stop completes.	Determined by A1-02 (0 - 10000 ms)	689
S3-20 (06A2) Expert	Dwell 2 Speed Reference	V/f OLV CLV CLV/PM Sets the speed reference for the Dwell 2 function. **Note:** Dwell 2 function is disabled when you set this parameter to 0.00%.	0.00% (0.00 - 100.00%)	690
S3-21 (06A5) Expert	Dwell 2 End Speed	V/f OLV CLV CLV/PM Sets the speed at which the drive ends the Dwell 2 function. **Note:** When *S3-21 ≠ 0.00%*, the drive does not switch the acceleration ramps at the speed set in *C1-11 [Accel/Decel Ramp Switchover Spd]*.	0.00% (0.00 - 100.00%)	690
S3-27 (06BD)	Load1 Torque Compensation Level	V/f OLV CLV CLV/PM Sets the torque compensation value for load condition 1.	-50.0% (-100.0 - +100.0%)	690
S3-28 (06BE)	Load2 Torque Compensation Level	V/f OLV CLV CLV/PM Sets the torque compensation value for load condition 2.	50.0% (-100.0 - +100.0%)	691
S3-29 (06BF)	Load 1 Analog Input Level	V/f OLV CLV CLV/PM Sets the analog signal level from the load cell for load condition 1.	0.0% (-100.0 - +100.0%)	691
S3-30 (06C0)	Load 2 Analog Input Level	V/f OLV CLV CLV/PM Sets the analog signal level from the load cell for load condition 2.	100.0% (-100.0 - +100.0%)	692
S3-34 (06C4) Expert	Position Lock Torque Bias 1	V/f OLV CLV CLV/PM Sets a maximum value for the torque bias used for Anti-Rollback when the drive does Position Lock at start. Usually it is not necessary to change this setting.	0.0% (0.0 - 100.0%)	692
S3-35 (06C5) Expert	Position Lock Torque Bias 2	V/f OLV CLV CLV/PM Sets an intermediate value for the torque bias used for Anti-Rollback when the drive does Position Lock at start. Usually it is not necessary to change this setting.	0.0% (0.0 - 100.0%)	692

No. (Hex.)	Name	Description	Default (Range)	Ref.
S3-37 (06C7) Expert	Torque Bias 1 Pos.Dev. Lvl	V/f OLV CLV CLV/PM Sets the position deviation level at which *S3-34 [Position Lock Torque Bias 1]* activates. Usually it is not necessary to change this setting.	0 ms (0 - 32767 ms)	692
S3-38 (06C8) Expert	Torque Bias 2 Pos.Dev. Lvl	V/f OLV CLV CLV/PM Sets the position deviation level when the drive should switch from the Anti-Rollback torque bias set in *S3-34 [Position Lock Torque Bias 1]* to the torque bias set in *S3-35 [Position Lock Torque Bias 2]*. Usually it is not necessary to change this setting.	0 ms (0 - 32767 ms)	692
S3-39 (06C9)	Position Lock Integral Gain	V/f OLV CLV CLV/PM Sets the drive responsiveness for Anti-Rollback during Position Lock at start. Usually it is not necessary to change this setting.	0.00 (-30.00 - +30.00)	692
S3-40 (06CA) Expert	Position Lock Movement Detection	V/f OLV CLV CLV/PM Sets the amount of pulses for movement detection during Anti-Rollback.	1 (0 - 100)	692
S3-41 (06CB) Expert	PosLock Gain2 Reduction Factor	V/f OLV CLV CLV/PM Sets a reduction factor for the Anti-Rollback Gain set in *S3-02 [Position Lock Gain 2 at Start]*.	0.50 (0.00 - 1.00)	693
S3-52 (1A9F) Expert	ACR P Gain at Normal Run	V/f OLV CLV CLV/PM Sets the proportional gain for the Automatic Current Regulator (ACR) at normal operation.	1000 (0 - 5000)	693
S3-53 (1AA0) Expert	ACR Integral Time at Normal Run	V/f OLV CLV CLV/PM Sets the integral time for Automatic Current Regulator at normal operation.	10.0 ms (0.0 - 100.0 ms)	693
S3-54 (1AA1) Expert	ACR P Gain at Start	V/f OLV CLV CLV/PM Sets the proportional gain for the Automatic Current Regulator at start.	1000 (0 - 5000)	693
S3-55 (1AA2) Expert	ACR Integral Time at Start	V/f OLV CLV CLV/PM Sets the integral time for Automatic Current Regulator at start.	10.0 ms (0.0 - 100.0 ms)	693

◆ S4: Rescue Operation

No. (Hex.)	Name	Description	Default (Range)	Ref.
S4-01 (06A6)	Light Load Direction Search Sel	V/f OLV CLV CLV/PM Sets the function to enable and disable Light Load Direction Search. 0 : Disabled 1 : Enabled for Motor 1 and Motor 2 2 : Enabled for Motor 1 only 3 : Enabled - Advanced	0 (0 - 3)	693
S4-02 (06A7) Expert	Light Load Search Method	V/f OLV CLV CLV/PM Sets the method used to do Light Load Direction Search. 0 : Output Current 1 : Regenerative Direction Detection	1 (0, 1)	694
S4-03 (06A8)	Light Load Direction Search Time	V/f OLV CLV CLV/PM Sets the time to do Light Load Direction Search.	1.0 s (0.0 - 5.0 s)	694
S4-04 (06A9)	Light Load Search Speed Ref.	V/f OLV CLV CLV/PM Sets the speed reference to use during Light Load Direction Search. **Note:** The default setting changes when *A1-02 [Control Method Selection]* changes: • When *A1-02 = 7 [CLV/PM]*, the default setting is 10.00%. • When *A1-02 ≠ 7*, the default setting is 5.00%.	Determined by A1-02 (0.00 - 20.00%)	694
S4-05 (06AA) Expert	Rescue Operation Torque Limit	V/f OLV CLV CLV/PM Sets the torque limit used during Rescue Operation.	100% (0 - 300%)	694
S4-06 (06CC) Expert	Rescue Power Supply Selection	V/f OLV CLV CLV/PM Sets the type of backup power supply the drive should use when it loses power. 0 : Battery 1 : Single Phase UPS 2 : Three Phase UPS	0 (0 - 2)	694
S4-07 (06CD) Expert	UPS Power Rating	V/f OLV CLV CLV/PM Sets the capacity of the UPS.	0.0 kVA (0.0 - 100.0 kVA)	694

No. (Hex.)	Name	Description	Default (Range)	Ref.
S4-08 (06CE) Expert	UPS Speed Limit Selection	V/f OLV CLV CLV/PM Sets how a speed limit should be applied to the Rescue Operation speed set in *S4-15 [Rescue Speed Reference Selection]* when the drive uses a UPS to do Rescue Operation. **Note:** This parameter is enabled only when *S4-06 = 1, 2 [Rescue Power Supply Selection = Single Phase UPS, Three Phase UPS]*. 0 : Disabled 1 : Enabled during Light Load Search 2 : Enabled	2 (0 - 2)	695
S4-12 (06D2) Expert	DC Bus Voltage during Rescue	V/f OLV CLV CLV/PM Sets the DC bus voltage during Rescue Operation.	0 V (0 - 1150 V)	695
S4-13 (06D3) Expert	PowerSupply Reduction Lvl@Rescue	V/f OLV CLV CLV/PM Sets the level at which the drive detects a *PF5 [Rescue Power Supply Low Error]* fault.	80% (10 - 100%)	695
S4-15 (06DA)	Rescue Speed Reference Selection	V/f OLV CLV CLV/PM Sets the speed reference used for Rescue Operation. 0 : D1-25 1 : Selected Speed	0 (0, 1)	695
S4-20 (1A9D) Expert	Light Load Search Dir Override	V/f OLV CLV CLV/PM Sets the evacuation in Light Load Direction determined by the drive. **Note:** This parameter is enabled only when *S4-01 = 3 [Light Load Direction Search Sel = Enabled - Advanced]*. 0 : Disabled 1 : Enabled	1 (0, 1)	696

◆ S5: Elevator Functionality

No. (Hex.)	Name	Description	Default (Range)	Ref.
S5-01 (06AB)	Short Floor Operation Selection	V/f OLV CLV CLV/PM Sets the function to enable and disable the Short Floor function. 0 : Disabled 1 : Standard Short Floor 2 : Advance Short Floor	0 (0 - 2)	702
S5-02 (06AC)	Short Floor Nominal Speed	V/f OLV CLV CLV/PM Sets the nominal speed used to calculate the distance for the Short Floor function when *d1-18 = 0 or 3 [Speed Reference Selection Mode = Multi-speed Mode1 (d1-01 to 08) or Multi-speed Mode2 (d1-02 to 08)]*.	0.0% (0.0 - 100.0%)	702
S5-03 (06AD) Expert	Short Floor Constant Speed Time	V/f OLV CLV CLV/PM Sets the minimum time of the constant speed operation when *S5-01 = 2 [Short Floor Operation Selection = Advance Short Floor]*.	0.0 s (0.0 - 2.0 s)	702
S5-04 (06AE) Expert	Distance Calc Acc Time Gain	V/f OLV CLV CLV/PM Sets the gain used to adjust the jerk at acceleration for an optimum speed calculation when *S5-01 = 2 [Short Floor Operation Selection = Advance Short Floor]*. **Note:** If the setting value is too low, faster optimum speeds and shortened leveling times can trigger an overrun. Do not set this gain lower than 100%.	150.0% (50.0 - 200.0%)	702
S5-05 (06AF) Expert	Distance Calc Dec Time Gain	V/f OLV CLV CLV/PM Sets the gain used to adjust the jerk at deceleration for an optimum speed calculation when *S5-01 = 2 [Short Floor Operation Selection = Advance Short Floor]*. **Note:** If the setting value is too low, faster optimum speeds and shortened leveling times can trigger an overrun. Do not set this gain lower than 100%.	150.0% (50.0 - 200.0%)	702
S5-10 (06B0) Expert	Leveling Stop Method Selection	V/f OLV CLV CLV/PM Sets the stopping method. 0 : Speed Control 1 : Direct Landing 2 : LevelingDistCtrl 3 : Direct + Leveling	0 (0 - 3)	703
S5-11 (06B1) Expert	Deceleration Distance@High Speed	V/f OLV CLV CLV/PM Sets the deceleration distance when Stop Distance Control is enabled. **Note:** • Parameter *o1-12 [Length Units]* sets the units for this parameter. When *o1-12 = 1 [Inch Units]*, the default setting is 0.00 in, and the setting range is 0.00 in to 655.00 in. • Set a value larger than *U4-43 [Min.Dec.Distance (H)]* to this parameter. If you set *S5-11 < U4-43*, the drive detects *oPE21 [Elevator Parameter Setting Fault]*.	0 mm (0 - 32767 mm)	703

No. (Hex.)	Name	Description	Default (Range)	Ref.
S5-12 (06B2) RUN Expert	Up Stopping Distance	V/f OLV CLV CLV/PM Sets the stopping distance when the motor operates the elevator in the up direction and when Stop Distance Control is enabled. **Note:** • Parameter *o1-12 [Length Units]* sets the units for this parameter. When *o1-12 = 1 [Inch Units]*, the default setting is 5.91 in, and the setting range is 0.00 in to 393.00 in. • Set a value larger than *U4-44 [Min.Stop Distance]* to this parameter. If you set *S5-12 < U4-44*, the drive detects *oPE21 [Elevator Parameter Setting Fault]*.	150 mm (0 - 10000 mm)	703
S5-13 (06D6) Expert	Direct Landing Minimum Spd Level	V/f OLV CLV CLV/PM Sets the speed level for the start of Direct Landing as a percentage of *E1-04 [Maximum Output Frequency]*. **Note:** • Parameter *o1-03 [Speed Display Unit Selection]* sets the units for this parameter. • When *S5-10 = 3 [Direct + Leveling]*, if you set *S5-13 ≤ S5-24 [Creep Start Speed]*, the drive detects *oPE21 [Elevator Parameter Setting Fault]*.	8.00% (0.00 - 100.00%)	703
S5-14 (06EF) Expert	Decel Distance @ Mid Speed	V/f OLV CLV CLV/PM Sets the deceleration distance when the speed is *S5-16 [Direct Landing Mid Speed Level]* or lower. **Note:** • Parameter *o1-12 [Length Units]* sets the units for this parameter. When *o1-12 = 1 [Inch Units]*, the default setting is 0.00 in, and the setting range is 0.00 in to 655.00 in. • Set a value larger than *U4-47 [Min.Dec.Distance (M)]* to this parameter. If you set *S5-14 < U4-47*, the drive detects *oPE21 [Elevator Parameter Setting Fault]*.	0 mm (0 - 32767 mm)	704
S5-15 (06D8) Expert	Decel Distance @ Low Speed	V/f OLV CLV CLV/PM Sets the deceleration distance when the speed is *S5-17 [Direct Landing Low Speed Level]* or lower. **Note:** • Parameter *o1-12 [Length Units]* sets the units for this parameter. When *o1-12 = 1 [Inch Units]*, the default setting is 0.00 in, and the setting range is 0.00 in to 655.00 in. • Set a value larger than *U4-48 [Min.Dec.Distance (L)]* to this parameter. If you set *S5-15 < U4-48*, the drive detects *oPE21 [Elevator Parameter Setting Fault]*.	0 mm (0 - 32767 mm)	704
S5-16 (06D9) Expert	Direct Landing Mid Speed Level	V/f OLV CLV CLV/PM Sets the middle speed level for the start of Direct Landing as a percentage of *E1-04 [Maximum Output Frequency]*. **Note:** • Parameter *o1-03 [Speed Display Unit Selection]* sets the units for this parameter. • If you set *S5-16 ≥ S5-17 [Direct Landing Low Speed Level]* and when *S5-17 ≠ 0.00%*, the drive detects *oPE21 [Elevator Parameter Setting Fault]*.	0.00% (0.00 - 100.00%)	704
S5-17 (06DB) Expert	Direct Landing Low Speed Level	V/f OLV CLV CLV/PM Sets the low speed level for the start of Direct Landing as a percentage of *E1-04 [Maximum Output Frequency]*. **Note:** • Parameter *o1-03 [Speed Display Unit Selection]* sets the units for this parameter. • If you set *S5-17 ≤ S5-16 [Direct Landing Mid Speed Level]* and when *S5-17 ≠ 0.00%*, the drive detects *oPE21 [Elevator Parameter Setting Fault]*.	0.00% (0.00 - 100.00%)	704
S5-18 (06DC) Expert	Digital Input 5C Accept Distance	V/f OLV CLV CLV/PM Set the remaining distance at which the signal from an MFDI terminal set for *H1-xx = 5C [Stop Distance Correction]* is applicable. **Note:** Parameter *o1-12 [Length Units]* sets the units for this parameter. When *o1-12 = 1 [Inch Units]*, the default setting is 19.69 in, and the setting range is 0.00 in to 655.00 in.	500 mm (0 - 32767 mm)	705
S5-19 (06DD) RUN Expert	Down Stopping Distance	V/f OLV CLV CLV/PM Sets the stopping distance when the motor operates the elevator in the down direction and when Stop Distance Control is enabled. **Note:** • Parameter *o1-12 [Length Units]* sets the units for this parameter. When *o1-12 = 1 [Inch Units]*, the default setting is 5.91 in, and the setting range is 0.00 in to 393.00 in. • Set a value larger than *U4-44 [Min.Stop Distance]* to this parameter. If you set *S5-19 < U4-44*, the drive detects *oPE21 [Elevator Parameter Setting Fault]*.	150 mm (0 - 10000 mm)	705
S5-20 (06DE) Expert	Feed Forward P Gain @Direct-Land	V/f OLV CLV CLV/PM Sets the proportional gain of feed forward control to be switched during distance control.	1.00 (0.01 - 100.00)	705
S5-21 (06DF) Expert	Feed Forward Gain Switching Time	V/f OLV CLV CLV/PM Sets the time to switch the feed forward control gain from *n5-03 [Feed Forward Control Gain]* to *S5-20 [Feed Forward P Gain @Direct-Land]*.	0.100 s (0.001 - 10.000 s)	705
S5-24 (06E3) Expert	Creep Start Speed	V/f OLV CLV CLV/PM Sets the speed at which creep movement starts when *S5-10 = 3 [Leveling Stop Method Selection = Direct + Leveling]*. **Note:** • Parameter *o1-03 [Speed Display Unit Selection]* sets the units for this parameter. • When *S5-10 = 3 [Direct + Leveling]*, if you set *S5-24 ≥ S5-13 [Direct Landing Minimum Spd Level]*, the drive detects *oPE21 [Elevator Parameter Setting Fault]*.	1.20% (0.00 - 100.00%)	705

No. (Hex.)	Name	Description	Default (Range)	Ref.
S5-25 (06E4) Expert	Creep Distance	V/f OLV CLV CLV/PM Sets the distance from creep speed to stop. **Note:** Parameter *o1-12 [Length Units]* sets the units for this parameter. When *o1-12 = 1 [Inch Units]*, the default setting is 19.69 in, and the setting range is 0.00 in to 393.00 in.	500 mm (0 - 10000 mm)	706
S5-26 (06E5) Expert	Adjuster for Dec Distance	V/f OLV CLV CLV/PM Sets the value to decrease the deceleration distance in Direct Landing when *S5-10 = 3 [Leveling Stop Method Selection = Direct + Leveling]*. **Note:** Parameter *o1-12 [Length Units]* sets the units for this parameter. When *o1-12 = 1 [Inch Units]*, the default setting is 0.00 in, and the setting range is -19.69 in to +19.69 in.	0 mm (-500 - +500 mm)	706
S5-30 (06E9) Expert	Brake Torque Check Speed	V/f OLV CLV CLV/PM Sets the speed reference for brake torque check as a percentage of *E1-04 [Maximum Output Frequency]*.	3.0% (0.0 - 20.0%)	706
S5-31 (06EA)	Car Movement @ Brake T Check	V/f OLV CLV CLV/PM Sets the allowable amount of car movement during the brake torque check. **Note:** Parameter *o1-12 [Length Units]* sets the units for this parameter. When *o1-12 = 1 [Inch Units]*, the default setting is 2.36 in, and the setting range is 0.00 in to 3.93 in.	60 mm (0 - 100 mm)	706
S5-32 (06EB)	Applying Motor Torque During BTC	V/f OLV CLV CLV/PM Sets the amount of torque applied during the brake torque check as a percentage of the motor rated torque. **Note:** If you set a value larger than the torque limit of the drive, the drive detects *oPE21 [Elevator Parameter Setting Fault]*.	100% (50 - 200%)	706
S5-33 (06EC)	Motor Torque Ramp Up Time	V/f OLV CLV CLV/PM Sets the ramp up time to increase the motor torque to the value set in *S5-32 [Applying Motor Torque During BTC]* during the brake torque check.	0.5 s (0.0 - 3.0 s)	707
S5-34 (06ED)	Motor Torque Ramp Down Time	V/f OLV CLV CLV/PM Sets the ramp down time to decrease the motor torque from the value set in *S5-32 [Applying Motor Torque During BTC]* to 0% during the brake torque check.	0.5 s (0.0 - 3.0 s)	707
S5-35 (06EE)	Brake Torque Check Run Time	V/f OLV CLV CLV/PM Sets the time to operate the drive at the motor torque value set in *S5-32 [Applying Motor Torque During BTC]* during the brake torque check.	3.0 s (0.0 - 10.0 s)	707

◆ S6: Elevator Error Detection

No. (Hex.)	Name	Description	Default (Range)	Ref.
S6-01 (06B3)	Mtr Contact Error(SE1) Reset Sel	V/f OLV CLV CLV/PM Sets when the drive should detect *SE1 [Motor Contactor Response Error]* and the condition of fault reset. 0 : Manual Reset at Stop 1 : Auto Reset at Stop 2 : No SE1 Detection	0 (0 - 2)	707
S6-02 (06B4)	Start I Error(SE2) Detect DelayT	V/f OLV CLV CLV/PM Sets the delay time for *SE2 [Starting Current Error]* detection.	200 ms (0 - 10000 ms)	707
S6-03 (06B5)	Start I Error(SE2) Detect Level	V/f OLV CLV CLV/PM Sets the level of current applied to the motor when the Brake Control command is activated, as a percentage of *E2-03 [Motor No-Load Current]*.	25% (0 - 100%)	708
S6-04 (06B6)	Mtr I Error (SE3) Detect DelayT	V/f OLV CLV CLV/PM Sets a delay time for *SE3 [Output Current Error]* detection.	200 ms (0 - 5000 ms)	708
S6-05 (06B7)	BrakeSet Error(SE4) DetectDelayT	V/f OLV CLV CLV/PM Sets a delay time for *SE4 [Brake Response Error]* detection.	500 ms (0 - 10000 ms)	708
S6-06 (1A98) Expert	SE4 Detection Time During Run	V/f OLV CLV CLV/PM Set the time to detect *SE4 [Brake Response Error]* during run when *S6-07 = 1 [Brake Response Monitor Function = Enabled]*.	200 ms (0 - 10000 ms)	708
S6-07 (1A99)	Brake Response Monitor Function	V/f OLV CLV CLV/PM Sets the function to enable and disable the Brake Response Monitor function. 0 : Disabled 1 : Enabled	0 (0, 1)	709

No. (Hex.)	Name	Description	Default (Range)	Ref.
S6-08 (1A9A)	SE4 Fault Reset	V/f OLV CLV CLV/PM Sets fault reset methods when *S6-07 = 1 [Brake Response Monitor Selection = Enabled]* and the drive detects *SE4 [Brake Response Error]*. When *S6-07 = 1*, the only method to reset the *SE4* fault is to set *S6-08 = 1*. 0 : Disabled 1 : Enabled	0 (0, 1)	709
S6-09 (1AA3)	Brake Resp. Fault@Travel Select	V/f OLV CLV CLV/PM Sets behavior of the Brake Response Fault during travel. 0 : Fault@Detection 1 : Alarm@Detection/Fault after Stop	0 (0, 1)	709
S6-10 (06B8)	Overacceleration Detection Level	V/f OLV CLV CLV/PM Sets the acceleration rate that triggers the *dv6 [Over Jerk]* fault. Overacceleration detection is disabled when set to 0.0 m/s^2. **Note:** The default setting and the setting range change when *o1-03 [Speed Display Unit Selection]* changes: • When *o1-03 = 0 to 5*, the default setting is 1.5 m/s^2, and the setting range is 0.0 m/s^2 to 20.0 m/s^2. • When *o1-03 = 6*, the default is 5.0 ft/s^2. and the setting range is 0.0 ft/s^2 to 50.0 ft/s^2.	Determined by o1-03 (Determined by o1-03)	709
S6-11 (06B9)	Overacceleration Detection Time	V/f OLV CLV CLV/PM Sets the primary delay time that the acceleration must exceed the overacceleration detection level before *dv6 [Over Jerk]* is triggered. Usually it is not necessary to change this setting.	250 ms (0 - 5000 ms)	710
S6-12 (06BA) Expert	Overacceleration Detection Sel	V/f OLV CLV CLV/PM Sets the conditions for *dv6 [Over Jerk]* detection. 0 : Always Enabled 1 : Enabled only During Run	1 (0, 1)	710
S6-15 (06BB) Expert	Speed Reference Loss Detection	V/f OLV CLV CLV/PM Sets the function to enable and disable *FrL [Speed Reference Missing]* detection. 0 : Disabled 1 : Enabled	1 (0, 1)	710
S6-16 (06BC) Expert	BaseBlock (BB) Restart Selection	V/f OLV CLV CLV/PM Sets the function to let the drive restart the motor after returning to normal operation from Baseblock state (*H1-xx = 8/9 [Baseblock Command (N.O.)/Baseblock Command (N.C.)]*) or from Safe Torque-Off state (Safe Disable inputs H1 and H2 enabled) while the Up/Down command is still active. 0 : Disabled 1 : Enabled	0 (0, 1)	710

11.15 T: Auto-Tuning

◆ T0: Tuning Mode Selection

No. (Hex.)	Name	Description	Default (Range)	Ref.
T0-00 (1197)	Tuning Mode Selection	V/f OLV CLV CLV/PM Sets the type of Auto-Tuning. 0 : Motor Parameter Tuning	0 (0)	711

◆ T1: Induction Motor Auto-Tuning

No. (Hex.)	Name	Description	Default (Range)	Ref.
T1-01 (0701)	Auto-Tuning Mode Selection	V/f OLV CLV CLV/PM Sets the type of Auto-Tuning. **Note:** The setting range changes when *A1-02 [Control Method Selection]* changes: • *A1-02 = 0 [V/f]*: 0, 2 • *A1-02 = 2, 3 [OLV, CLV]*: 0 - 2 0 : Rotational Auto-Tuning 1 : Stationary Auto-Tuning 1 2 : Stationary Line-Line Resistance	Determined by A1-02 (Determined by A1-02)	711
T1-02 (0702)	Motor Rated Power	V/f OLV CLV CLV/PM Sets the motor rated output in the units set in *o1-58 [Motor Power Unit Selection]*.	Determined by o2-04 (0.00 - 650.00 kW)	711
T1-03 (0703)	Motor Rated Voltage	V/f OLV CLV CLV/PM Sets the rated voltage (V) of the motor. Enter the base speed voltage for constant output motors.	200 V Class: 200.0 V 400 V Class: 400.0 V (200 V Class: 0.0 - 255.0 V, 400 V Class: 0.0 - 510.0 V)	712
T1-04 (0704)	Motor Rated Current	V/f OLV CLV CLV/PM Sets the rated current (A) of the motor.	Determined by o2-04 (10% to 200% of the continuous rated output current)	712
T1-05 (0705)	Motor Base Frequency	V/f OLV CLV CLV/PM Sets the base frequency (Hz) of the motor.	60.0 Hz (0.0 - 590.0 Hz)	712
T1-06 (0706)	Number of Motor Poles	V/f OLV CLV CLV/PM Sets the number of motor poles.	4 (2 - 120)	712
T1-07 (0707)	Motor Base Speed	V/f OLV CLV CLV/PM Sets the motor base speed for Auto-Tuning (min^{-1} (r/min)).	1750 min^{-1} (r/min) (0 - 35400 min^{-1} (r/min))	712
T1-08 (0708)	Encoder Pulse Count (PPR)	V/f OLV CLV CLV/PM Sets the number of PG (pulse generator, encoder) pulses.	1024 ppr (0 - 60000 ppr)	712
T1-09 (0709)	Motor No-Load Current	V/f OLV CLV CLV/PM Sets the no-load current of the motor.	- (0 A - T1-04; max. of 2999.9)	713
T1-10 (070A)	Motor Rated Slip Frequency	V/f OLV CLV CLV/PM Sets motor rated slip.	0.000 Hz (0.000 - 20.000 Hz)	713
T1-12 (0BDB)	Test Mode Selection	V/f OLV CLV CLV/PM Sets the function to enable Test Mode after Stationary Auto-Tuning. When you can operate the motor with a light load attached after Stationary Auto-Tuning is complete, enable this parameter. **Note:** You must first set *T1-10 = 0 [Motor Rated Slip Frequency = 0 Hz]* to enable this parameter. 0 : No 1 : Yes	0 (0, 1)	713
T1-13 (0BDC)	No-Load Voltage	V/f OLV CLV CLV/PM Sets the no-load voltage of the motor. When the no-load voltage at rated speed is available, for example on the motor test report, set the voltage in this parameter. If the no-load voltage is not available, do not change this parameter. **Note:** To get the same qualities as a Yaskawa 1000-series drive or previous series drive, set this parameter = *T1-03 [Motor Rated Voltage]*.	T1-03 × 0.85 (200 V Class: 0.0 - 255.0 V, 400 V Class: 0.0 - 510.0 V)	713

◆ T2: PM Motor Auto-Tuning

No. (Hex.)	Name	Description	Default (Range)	Ref.
T2-01 (0750)	PM Auto-Tuning Selection	V/f OLV CLV CLV/PM Sets the type of Auto-Tuning for PM motors. 0 : Manual Entry w/ Motor Data Sheet 1 : Stationary (Ld, Lq, R, back-EMF, Encoder offset) 3 : Stationary Encoder Offset Tuning 4 : Rotational (Only back-EMF, Encoder offset)	0 (0, 1, 3, 4)	714
T2-04 (0730)	PM Motor Rated Power	V/f OLV CLV CLV/PM Uses the units set in *o1-58 [Motor Power Unit Selection]* to set the PM motor rated output power.	Determined by o2-04 (0.00 - 650.00 kW)	714
T2-05 (0732)	PM Motor Rated Voltage	V/f OLV CLV CLV/PM Sets the rated voltage (V) of the motor.	200 V Class: 200.0 V 400 V Class: 400.0 V (200 V Class: 0.0 - 255.0 V, 400 V Class: 0.0 - 510.0 V)	714
T2-06 (0733)	PM Motor Rated Current	V/f OLV CLV CLV/PM Sets the rated current (A) of the motor.	Determined by o2-04 (10% to 200% of the continuous rated output current)	714
T2-08 (0734)	Number of PM Motor Poles	V/f OLV CLV CLV/PM Sets the number of motor poles. **Note:** When you connect the PG-E3 option, the maximum value for this parameter is 48.	12 (2 - 120)	714
T2-09 (0731)	PM Motor Base Speed	V/f OLV CLV CLV/PM Sets the motor base speed (min^{-1} (r/min)).	150 min^{-1} (r/min) (0 - 24000 min^{-1} (r/min))	714
T2-10 (0754)	PM Motor Stator Resistance	V/f OLV CLV CLV/PM Sets the stator resistance for each motor phase.	0.000 Ω (0.000 - 65.000 Ω)	715
T2-11 (0735)	PM Motor d-Axis Inductance	V/f OLV CLV CLV/PM Sets the d-axis inductance of the motor on a per phase basis.	0.00 mH (0.00 - 600.00 mH)	715
T2-12 (0736)	PM Motor q-Axis Inductance	V/f OLV CLV CLV/PM Sets the q-Axis inductance of the motor on a per phase basis.	0.00 mH (0.00 - 600.00 mH)	715
T2-13 (0755)	Back-EMF Units Selection	V/f OLV CLV CLV/PM Sets the units that the drive uses to set the induced voltage constant. 0 : mV/(rev/min) 1 : mV/(rad/sec)	1 (0, 1)	715
T2-14 (0737)	Back-EMF Voltage Constant (Ke)	V/f OLV CLV CLV/PM Sets the motor induced voltage constant (Ke).	Determined by T2-13 (0.0 - 6500.0)	715
T2-15 (0756)	Pull-In Current Level	V/f OLV CLV CLV/PM Sets the level of the pull-in current as a percentage of *E5-03 [PM Motor Rated Current (FLA)]*. Usually it is not necessary to change this setting.	30% (0 - 120%)	715
T2-16 (0738)	Encoder Pulse Count (PPR)	V/f OLV CLV CLV/PM Sets the number of PG (pulse generator, encoder) pulses.	1024 ppr (1 - 15000 ppr)	715
T2-17 (0757)	Encoder Z-Pulse Offset	V/f OLV CLV CLV/PM Sets the encoder Z-pulse offset (Δθ) (pulse generator, encoder) that is listed on the motor nameplate.	0.0° (-180.0 - +180.0°)	715
T2-18 (0BB0)	SINCOS Encoder Tuning Speed	V/f OLV CLV CLV/PM Sets the speed reference for Auto-Tuning of PG-E3 encoder characteristics (*T2-01 = 1, 3, or 4 [PM Auto-Tuning Selection = Stationary (Ld, Lq, R), Encoder Tuning, or Rotational (Ld, Lq, R, back-EMF)]*).	10 min^{-1} (r/min) (1 - 30 min^{-1} (r/min))	716
T2-19 (0BB1)	SINCOS Encoder Tuning Direction	V/f OLV CLV CLV/PM Sets the direction of motor rotation for Auto-Tuning of PG-E3 encoder characteristics (*T2-01 = 3 or 4 [PM Auto-Tuning Selection = Encoder Tuning or Rotational (Ld, Lq, R, back-EMF)]*). 0 : Pulse A leads in Up Direction 1 : Pulse B leads in Up Direction	0 (0, 1)	716

11.16 U: Monitors

◆ U1: Operation Status Monitors

No. (Hex.)	Name	Description	MFAO Signal Level
U1-01 (0040)	Speed Reference	V/f OLV CLV CLV/PM Shows the speed reference value. Unit: When *o1-03 [Speed Display Unit Selection]* changes, the display units for this parameter also change: • *o1-03 = 0 [0.01 Hz]*: 0.01 Hz • *o1-03 = 4 [Elevator Unit1 - m/s, s, s] or 5 [Elevator Unit2 - m/(s, s^2, s^3)]*: 0.01 m/s • *o1-03 = 6 [Elevator Unit3-ft/(min,s^2,s^3)]*: 0.1 ft/min	10 V = Maximum frequency (Also available for -10 V to +10 V)
U1-02 (0041)	Output Speed	V/f OLV CLV CLV/PM Shows the output speed. Unit: When *o1-03 [Speed Display Unit Selection]* changes, the display units for this parameter also change: • *o1-03 = 0 [0.01 Hz]*: 0.01 Hz • *o1-03 = 4 [Elevator Unit1 - m/s, s, s] or 5 [Elevator Unit2 - m/(s, s^2, s^3)]*: 0.01 m/s • *o1-03 = 6 [Elevator Unit3-ft/(min,s^2,s^3)]*: 0.1 ft/min	10 V = Maximum frequency (Also available for -10 V to +10 V)
U1-03 (0042)	Output Current	V/f OLV CLV CLV/PM Shows the output current. The keypad shows the value of *U1-03* in amperes (A). When you use MEMOBUS/Modbus communications to show the monitor, the current is "8192 = continuous rated output current (A)". Use the formula: "Numerals being displayed / 8192 × continuous rated output current (A)" to use the MEMOBUS/Modbus communication current value shown in the monitor. Unit: When the drive model changes, the display units for this parameter also change: • 0.01 A: 2022 - 2041, 4012 - 4023 • 0.1 A: 2059 - 2519, 4030 - 4380	10 V = Continuous rated output current of the drive
U1-04 (0043)	Control Method	V/f OLV CLV CLV/PM Shows the drive control method. 0 : V/f Control 2 : Open Loop Vector 3 : Closed Loop Vector 7 : PM Closed Loop Vector	No signal output available
U1-05 (0044)	Speed Feedback	V/f OLV CLV CLV/PM Shows the detected motor speed. Unit: When *o1-03 [Speed Display Unit Selection]* changes, the display units for this parameter also change: • *o1-03 = 0 [0.01 Hz]*: 0.01 Hz • *o1-03 = 4 [Elevator Unit1 - m/s, s, s] or 5 [Elevator Unit2 - m/(s, s^2, s^3)]*: 0.01 m/s • *o1-03 = 6 [Elevator Unit3-ft/(min,s^2,s^3)]*: 0.1 ft/min	10 V = Maximum frequency (Also available for -10 V to +10 V)
U1-06 (0045)	Output Voltage Ref	V/f OLV CLV CLV/PM Shows the output voltage reference. Unit: 0.1 V	200 V Class: 10 V = 200 Vrms 400 V Class: 10 V = 400 Vrms
U1-07 (0046)	DC Bus Voltage	V/f OLV CLV CLV/PM Shows the DC bus voltage. Unit: 1 V	200 V Class: 10 V = 400 V 400 V Class: 10 V = 800 V
U1-08 (0047)	Output Power	V/f OLV CLV CLV/PM Shows the internally-calculated output power. When you change *A1-02 [Control Method Selection]*, it will also change the signal level of the analog output. • *A1-02 = 0 [V/f]*: Drive capacity (kW) • *A1-02 = 2, 3 [OLV, CLV]*: *PM Motor Rated Power [E2-11]* (kW) • *A1-02 = 7 [CLV/PM]*: *PM Motor Rated Power [E5-02]* (kW) Unit: When the drive model changes, the display units for this parameter change: • 0.01 kW: 2022 - 2041, 4012 - 4023 • 0.1 kW: 2059 - 2519, 4030 - 4380	10 V: Drive capacity (motor rated power) kW (Also available for -10 V to +10 V)
U1-09 (0048)	Torque Reference	V/f OLV CLV CLV/PM Shows the internal torque reference value. Unit: 0.1%	10 V = Motor rated torque (Also available for -10 V to +10 V)

No. (Hex.)	Name	Description	MFAO Signal Level
U1-10 (0049)	Input Terminal Status	V/f OLV CLV CLV/PM Shows the status of the MFDI terminal where 1 = ON and 0 = OFF. For example, *U1-10* shows "00000011" when terminals S1 and S2 are ON. bit0 : Terminal S1 (MFDI 1) bit1 : Terminal S2 (MFDI 2) bit2 : Terminal S3 (MFDI 3) bit3 : Terminal S4 (MFDI 4) bit4 : Terminal S5 (MFDI 5) bit5 : Terminal S6 (MFDI 6) bit6 : Terminal S7 (MFDI 7) bit7 : Terminal S8 (MFDI 8)	No signal output available
U1-11 (004A)	Output Terminal Status	V/f OLV CLV CLV/PM Shows the status of the MFDO terminal where 1 = ON and 0 = OFF. For example, *U1-11* shows "00000011" when terminals M1 and M3 are ON. **Note:** When *H2-xx = 100 to 178 [Inverse Output of Function]*, *U1-11* does not show the status in inverse. bit0 : Terminal M1-M2 bit1 : Terminal M3-M4 bit2 : Terminal M5-M6 bit3 : Terminal P1-C1 bit4 : Terminal P2-C2 bit5 : Not used (normal value of 0). bit6 : Not used (normal value of 0). bit7 : Fault relay MA/MB-MC	No signal output available
U1-12 (004B)	Drive Status	V/f OLV CLV CLV/PM Shows drive status where 1 = ON and 0 = OFF. For example, *U1-12* shows "00000101" during run with the Down command. bit0 : During Run bit1 : During zero-speed bit2 : During down direction bit3 : During fault reset signal input bit4 : During speed agreement bit5 : Drive Ready bit6 : During minor fault detection bit7 : During fault detection	No signal output available
U1-13 (004E)	Terminal A1 Level	V/f OLV CLV CLV/PM Shows the signal level of terminal A1. Unit: 0.1%	10 V = 100% (Also available for -10 V to +10 V)
U1-14 (004F)	Terminal A2 Level	V/f OLV CLV CLV/PM Shows the signal level of terminal A2. Unit: 0.1%	10 V = 100% (Also available for -10 V to +10 V)
U1-15 (0050)	Terminal A3 Level	V/f OLV CLV CLV/PM Shows the signal level of terminal A3. Unit: 0.1%	10 V = 100% (Also available for -10 V to +10 V)
U1-16 (0053)	SFS Output Speed	V/f OLV CLV CLV/PM Shows the output speed after soft start. Shows the frequency with acceleration and deceleration ramps and jerk settings. Unit: When *o1-03 [Speed Display Unit Selection]* changes, the display units for this parameter also change: • *o1-03 = 0 [0.01 Hz]*: 0.01 Hz • *o1-03 = 4 [Elevator Unit1 - m/s, s, s] or 5 [Elevator Unit2 - m/(s, s^2, s^3)]*: 0.01 m/s • *o1-03 = 6 [Elevator Unit3-ft/(min,s^2,s^3)]*: 0.1 ft/min	10 V = Maximum frequency (Also available for -10 V to +10 V)
U1-17 (0058)	DI-A3 Input Status	V/f OLV CLV CLV/PM Shows the reference value input from the DI-A3 option. Shows the input signal for DI-A3 in hexadecimal as set in *F3-01 [Digital Input Function Selection]*. 3FFFF: Set (1 bit) + Sign (1 bit) + 16 bit	No signal output available
U1-18 (0061)	oPE Fault Parameter	V/f OLV CLV CLV/PM Shows the parameter number that caused the *oPE02 [Parameter Range Setting Error]* or *oPE08 [Parameter Selection Error]*.	No signal output available

No. (Hex.)	Name	Description	MFAO Signal Level
U1-19 (0066)	MEMOBUS/Modbus Error Code	V/f OLV CLV CLV/PM Shows the contents of the MEMOBUS/Modbus communication error where 1 = “error” and 0 = “no error”. For example, *U1-19* shows “00000001” when there is a CRC error. bit0 : CRC Error bit1 : Data Length Error bit2 : Not used (normal value of 0). bit3 : Parity Error bit4 : Overrun Error bit5 : Framing Error bit6 : Timed Out bit7 : Not used (normal value of 0).	No signal output available
U1-25 (004D)	SoftwareNumber Flash	V/f OLV CLV CLV/PM Shows the FLASH ID.	No signal output available
U1-26 (005B)	SoftwareNumber ROM	V/f OLV CLV CLV/PM Shows the ROM ID.	No signal output available
U1-40 (009D)	Input Term Status 1	V/f OLV CLV CLV/PM Shows the status of the MFDI terminal where 1 = ON and 0 = OFF. For example, *U1-40* shows “00000000” when terminals S1 to S8 are OFF. bit0 : MFDI 1 (Terminal S1) bit1 : MFDI 2 (Terminal S2) bit2 : MFDI 3 (Terminal S3) bit3 : MFDI 4 (Terminal S4) bit4 : MFDI 5 (Terminal S5) bit5 : MFDI 6 (Terminal S6) bit6 : MFDI 7 (Terminal S7) bit7 : MFDI 8 (Terminal S8)	No signal output available
U1-41 (009E)	Input Term Status 2	V/f OLV CLV CLV/PM Shows the status of the MFDI terminal where 1 = ON and 0 = OFF. For example, *U1-41* shows “00000000” when terminals S9 and S10 are OFF. bit0 : MFDI 1 (Terminal S9) bit1 : MFDI 2 (Terminal S10) bit2 : Not used (normal value of 0). bit3 : Not used (normal value of 0). bit4 : Not used (normal value of 0). bit5 : Not used (normal value of 0). bit6 : Not used (normal value of 0). bit7 : Not used (normal value of 0).	No signal output available
U1-93 (1BC2) Expert	Carrier Frequency	V/f OLV CLV CLV/PM Shows actual carrier frequency. (When PWM is OFF, this parameter shows the *C6-03 [Carrier Frequency]* value.) Unit: 0.1 kHz	No signal output available
U1-94 (1BC3) Expert	Drive Status 2	V/f OLV CLV CLV/PM Shows drive status where 1 = ON and 0 = OFF. For example, *U1-94* shows “00000010” during torque boost. bit0 : During torque limit bit1 : During torque boost (carrier frequency reduction) bit2 : During current limit bit3 : During stall prevention bit4 : Not used (normal value of 0). bit5 : Not used (normal value of 0). bit6 : Not used (normal value of 0). bit7 : Not used (normal value of 0).	No signal output available

◆ U2: Fault Trace

No. (Hex.)	Name	Description	MFAO Signal Level
U2-01 (0080)	Current Fault	V/f OLV CLV CLV/PM Shows the fault that the drive has when viewing the monitor.	No signal output available
U2-02 (0081)	Previous Fault	V/f OLV CLV CLV/PM Shows the most recent fault.	No signal output available

No. (Hex.)	Name	Description	MFAO Signal Level
U2-03 (0082)	Speed Ref @ Fault	V/f OLV CLV CLV/PM Shows the speed reference at the most recent fault. Use *U1-01 [Speed Reference]* to monitor the speed reference value. Unit: When *o1-03 [Speed Display Unit Selection]* changes, the display units for this parameter also change: • *o1-03 = 0 [0.01 Hz]*: 0.01 Hz • *o1-03 = 4 [Elevator Unit1 - m/s, s, s] or 5 [Elevator Unit2 - m/(s, s^2, s^3)]*: 0.01 m/s • *o1-03 = 6 [Elevator Unit3-ft/(min,s^2,s^3)]*: 0.1 ft/min	No signal output available
U2-04 (0083)	Output Speed @ Fault	V/f OLV CLV CLV/PM Shows the output speed at the most recent fault. Use *U1-02 [Output Speed]* to monitor the actual output speed. Unit: When *o1-03 [Speed Display Unit Selection]* changes, the display units for this parameter also change: • *o1-03 = 0 [0.01 Hz]*: 0.01 Hz • *o1-03 = 4 [Elevator Unit1 - m/s, s, s] or 5 [Elevator Unit2 - m/(s, s^2, s^3)]*: 0.01 m/s • *o1-03 = 6 [Elevator Unit3-ft/(min,s^2,s^3)]*: 0.1 ft/min	No signal output available
U2-05 (0084)	Output Current@Fault	V/f OLV CLV CLV/PM Shows the output current at the most recent fault. Use *U1-03 [Output Current]* to monitor the output current. The keypad shows the value of *U1-03* in amperes (A). When you use MEMOBUS/Modbus communications to show the monitor, the current is “8192 = continuous rated output current (A)”. Use the formula: “Numerals being displayed / 8192 × continuous rated output current (A)” to use the MEMOBUS/Modbus communication current value shown in the monitor. Unit: When the drive model changes, the display units for this parameter also change: • 0.01 A: 2022 - 2041, 4012 - 4023 • 0.1 A: 2059 - 2519, 4030 - 4380	No signal output available
U2-06 (0085)	Spd Feedback @ Fault	V/f OLV CLV CLV/PM Shows the motor speed at the most recent fault. Use *U1-05 [Speed Feedback]* to monitor the motor speed. Unit: When *o1-03 [Speed Display Unit Selection]* changes, the display units for this parameter also change: • *o1-03 = 0 [0.01 Hz]*: 0.01 Hz • *o1-03 = 4 [Elevator Unit1 - m/s, s, s] or 5 [Elevator Unit2 - m/(s, s^2, s^3)]*: 0.01 m/s • *o1-03 = 6 [Elevator Unit3-ft/(min,s^2,s^3)]*: 0.1 ft/min	No signal output available
U2-07 (0086)	Output Voltage@Fault	V/f OLV CLV CLV/PM Shows the output voltage reference at the most recent fault. Use *U1-06 [Output Voltage Ref]* to monitor the output voltage reference. Unit: 0.1 V	No signal output available
U2-08 (0087)	DC Bus Voltage@Fault	V/f OLV CLV CLV/PM Shows the DC bus voltage at the most recent fault. Use *U1-07 [DC Bus Voltage]* to monitor the DC bus voltage. Unit: 1 V	No signal output available
U2-09 (0088)	Output Power @ Fault	V/f OLV CLV CLV/PM Shows the output power at the most recent fault. Use *U1-08 [Output Power]* to monitor the output power. Unit: 0.1 kW	No signal output available
U2-10 (0089)	Torque Ref @ Fault	V/f OLV CLV CLV/PM Shows the torque reference at the most recent fault as a percentage of the motor rated torque. Use *U1-09 [Torque Reference]* to monitor the torque reference. Unit: 0.1%	No signal output available
U2-11 (008A)	Input Terminal Status @ Fault	V/f OLV CLV CLV/PM Shows the status of the MFDI terminals at the most recent fault where 1 = ON and 0 = OFF. For example, *U2-11* shows “00000011” when terminals S1 and S2 are ON. Use *U1-10 [Input Terminal Status]* to monitor the MFDI terminal status. bit0 : Terminal S1 bit1 : Terminal S2 bit2 : Terminal S3 bit3 : Terminal S4 bit4 : Terminal S5 bit5 : Terminal S6 bit6 : Terminal S7 bit7 : Terminal S8	No signal output available

No. (Hex.)	Name	Description	MFAO Signal Level
U2-12 (008B)	Output Terminal Status @ Fault	V/f OLV CLV CLV/PM Shows the status of the MFDO terminals at the most recent fault where 1 = ON and 0 = OFF. For example, *U2-12* shows "00000011" when terminals M1 and M3 are ON. Use *U1-11 [Output Terminal Status]* to monitor the MFDO terminal status. bit0 : Terminal M1-M2 bit1 : Terminal M3-M4 bit2 : Terminal M5-M6 bit3 : Terminal P1-C1 bit4 : Terminal P2-C2 bit5 : Not used (normal value of 0). bit6 : Not used (normal value of 0). bit7 : Fault relay MA/MB-MC	No signal output available
U2-13 (008C)	Operation Status @ Fault	V/f OLV CLV CLV/PM Shows the status of the MFDO terminals at the most recent fault where 1 = ON and 0 = OFF. For example, *U2-13* shows "00000001" during run. Use *U1-12 [Drive Status]* to monitor the MFDO terminal status. bit0 : During Run bit1 : During zero-speed bit2 : During down direction bit3 : During fault reset signal input bit4 : During speed agreement bit5 : Drive ready bit6 : During minor fault detection bit7 : During fault detection	No signal output available
U2-14 (008D)	Elapsed Time @ Fault	V/f OLV CLV CLV/PM Shows the cumulative operation time of the drive at the most recent fault. Use *U4-01 [Cumulative Ope Time]* to monitor the cumulative operation time. Unit: 1 h	No signal output available
U2-15 (07E0)	SFS Output @ Fault	V/f OLV CLV CLV/PM Shows the output speed after soft start at the most recent fault. Use *U1-16 [SFS Output Speed]* to monitor the output speed after soft start. Unit: When *o1-03 [Speed Display Unit Selection]* changes, the display units for this parameter also change: • *o1-03 = 0 [0.01 Hz]*: 0.01 Hz • *o1-03 = 4 [Elevator Unit1 - m/s, s, s] or 5 [Elevator Unit2 - m/(s, s^2, s^3)]*: 0.01 m/s • *o1-03 = 6 [Elevator Unit3-ft/(min,s^2,s^3)]*: 0.1 ft/min	No signal output available
U2-16 (07E1)	q-Axis Current@Fault	V/f OLV CLV CLV/PM Shows the q-Axis current of the motor at the most recent fault. Use *U6-01 [Iq Secondary Current]* to monitor the q-Axis current of the motor. Unit: 0.1%	No signal output available
U2-17 (07E2)	d-Axis Current@Fault	V/f OLV CLV CLV/PM Shows the d-Axis current of the motor at the most recent fault. Use *U6-02 [Id ExcitationCurrent]* to monitor the d-Axis current of the motor. Unit: 0.1%	No signal output available
U2-20 (008E)	Heatsink Temp @Fault	V/f OLV CLV CLV/PM Shows the heatsink temperature at the most recent fault. Use *U4-08 [Heatsink Temperature]* to monitor the temperature of the heatsink. Unit: 1 °C	No signal output available
U2-29 (009F)	InTerm Status2@Fault	V/f OLV CLV CLV/PM Shows the status of the MFDI terminals at the most recent fault where 1 = ON and 0 = OFF. For example, *U2-29* shows "00000011" when terminals S9 and S10 are ON. Use *U1-10 [Input Terminal Status]* to monitor the MFDI terminal status. bit0 : MFDI 1 (Terminal S9) bit1 : MFDI 2 (Terminal S10) bit2 : Not used (normal value of 0). bit3 : Not used (normal value of 0). bit4 : Not used (normal value of 0). bit5 : Not used (normal value of 0). bit6 : Not used (normal value of 0). bit7 : Not used (normal value of 0).	No signal output available

◆ U3: Fault History

No. (Hex.)	Name	Description	MFAO Signal Level
U3-01 (0090)	1st MostRecent Fault	V/f OLV CLV CLV/PM Shows the fault history of the most recent fault. **Note:** The drive saves this fault history to two types of registers at the same time for the MEMOBUS/Modbus communications.	No signal output available
U3-02 (0091)	2nd MostRecent Fault	V/f OLV CLV CLV/PM Shows the fault history of the second most recent fault. **Note:** The drive saves this fault history to two types of registers at the same time for the MEMOBUS/Modbus communications.	No signal output available
U3-03 (0092)	3rd MostRecent Fault	V/f OLV CLV CLV/PM Shows the fault history of the third most recent fault. **Note:** The drive saves this fault history to two types of registers at the same time for the MEMOBUS/Modbus communications.	No signal output available
U3-04 (0093)	4th MostRecent Fault	V/f OLV CLV CLV/PM Shows the fault history of the fourth most recent fault. **Note:** The drive saves this fault history to two types of registers at the same time for the MEMOBUS/Modbus communications.	No signal output available
U3-05 (0804)	5th MostRecent Fault	V/f OLV CLV CLV/PM Shows the fault history of the fifth most recent fault.	No signal output available
U3-06 (0805)	6th MostRecent Fault	V/f OLV CLV CLV/PM Shows the fault history of the sixth most recent fault.	No signal output available
U3-07 (0806)	7th MostRecent Fault	V/f OLV CLV CLV/PM Shows the fault history of the seventh most recent fault.	No signal output available
U3-08 (0807)	8th MostRecent Fault	V/f OLV CLV CLV/PM Shows the fault history of the eighth most recent fault.	No signal output available
U3-09 (0808)	9th MostRecent Fault	V/f OLV CLV CLV/PM Shows the fault history of the ninth most recent fault.	No signal output available
U3-10 (0809)	10th MostRecentFault	V/f OLV CLV CLV/PM Shows the fault history of the tenth most recent fault.	No signal output available
U3-11 (0094)	ElapsedTime@1stFault	V/f OLV CLV CLV/PM Shows the cumulative operation time at the most recent fault. **Note:** The drive saves this cumulative operation time to two types of registers at the same time for the MEMOBUS/Modbus communications. Unit: 1 h	No signal output available
U3-12 (0095)	ElapsedTime@2ndFault	V/f OLV CLV CLV/PM Shows the cumulative operation time at the second most recent fault. **Note:** The drive saves this cumulative operation time to two types of registers at the same time for the MEMOBUS/Modbus communications. Unit: 1 h	No signal output available
U3-13 (0096)	ElapsedTime@3rdFault	V/f OLV CLV CLV/PM Shows the cumulative operation time at the third most recent fault. **Note:** The drive saves this cumulative operation time to two types of registers at the same time for the MEMOBUS/Modbus communications. Unit: 1 h	No signal output available
U3-14 (0097)	ElapsedTime@4thFault	V/f OLV CLV CLV/PM Shows the cumulative operation time at the fourth most recent fault. **Note:** The drive saves this cumulative operation time to two types of registers at the same time for the MEMOBUS/Modbus communications. Unit: 1 h	No signal output available
U3-15 (080E)	ElapsedTime@5thFault	V/f OLV CLV CLV/PM Shows the cumulative operation time at the fifth most recent fault. Unit: 1 h	No signal output available
U3-16 (080F)	ElapsedTime@6thFault	V/f OLV CLV CLV/PM Shows the cumulative operation time at the sixth most recent fault. Unit: 1 h	No signal output available

No. (Hex.)	Name	Description	MFAO Signal Level
U3-17 (0810)	ElapsedTime@7thFault	V/f OLV CLV CLV/PM Shows the cumulative operation time at the seventh most recent fault. Unit: 1 h	No signal output available
U3-18 (0811)	ElapsedTime@8thFault	V/f OLV CLV CLV/PM Shows the cumulative operation time at the eighth most recent fault. Unit: 1 h	No signal output available
U3-19 (0812)	ElapsedTime@9thFault	V/f OLV CLV CLV/PM Shows the cumulative operation time at the ninth most recent fault. Unit: 1 h	No signal output available
U3-20 (0813)	ElapsedTime@10 Fault	V/f OLV CLV CLV/PM Shows the cumulative operation time at the tenth most recent fault. Unit: 1 h	No signal output available

◆ U4: Maintenance Monitors

No. (Hex.)	Name	Description	MFAO Signal Level
U4-01 (004C)	Cumulative Ope Time	V/f OLV CLV CLV/PM Shows the cumulative operation time of the drive. Use *o4-01 [Elapsed Operating Time Setting]* to reset this monitor. Use *o4-02 [Elapsed Operating Time Selection]* to select the cumulative operation times from: • The time from when the drive is energized until it is de-energized. • The time at which the Up/Down command is turned ON. The maximum value that the monitor will show is *99999*. After this value is more than *99999*, the drive automatically resets it and starts to count from *0* again. Unit: 1 h **Note:** The MEMOBUS/Modbus communication data is shown in 10 h units. Use register 0099H for data in 1 h units.	10 V: 99999 h
U4-03 (0067)	Cooling Fan Ope Time	V/f OLV CLV CLV/PM Shows the cumulative operation time of the cooling fans. Use *o4-03 [Fan Operation Time Setting]* to reset this monitor. The maximum value that the monitor will show is *99999*. After this value is more than *99999*, the drive automatically resets it and starts to count from *0* again. Unit: 1 h **Note:** The MEMOBUS/Modbus communication data is shown in 10 h units. Use register 009BH for data in 1 h units.	10 V: 99999 h
U4-04 (007E)	Cool Fan Maintenance	V/f OLV CLV CLV/PM Shows the cumulative operation time of the cooling fans as a percentage of the estimated performance life of the cooling fans. The default value is 0. The value counts up from 0. Use *o4-03 [Fan Operation Time Setting]* to reset this monitor. Unit: 1% **Note:** Replace the cooling fans when this monitor is at 90%.	10 V: 100%
U4-05 (007C)	CapacitorMaintenance	V/f OLV CLV CLV/PM Shows the operation time of the electrolytic capacitors for the main circuit and control circuit as a percentage of the estimated performance life of the electrolytic capacitors. The default value is 0. The value counts up from 0. Use *o4-05 [Capacitor Maintenance Setting]* to reset this monitor. Unit: 1% **Note:** Replace the electrolytic capacitor when this monitor is at 90%.	10 V: 100%
U4-06 (07D6)	PreChargeRelayMainte	V/f OLV CLV CLV/PM Shows the operation time of the soft charge bypass relay as a percentage of the estimated performance life of the soft charge bypass relay. The default value is 0. The value counts up from 0. Use *o4-07 [Softcharge Relay Maintenance Set]* to reset this monitor. Unit: 1% **Note:** Replace the drive when this monitor is at 90%.	10 V: 100%

No. (Hex.)	Name	Description	MFAO Signal Level
U4-07 (07D7)	IGBT Maintenance	V/f OLV CLV CLV/PM Shows the operation time of the IGBTs as a percentage of the estimated performance life of the IGBTs. The default value is 0. The value counts up from 0. Use *o4-09 [IGBT Maintenance Setting]* to reset this monitor. Unit: 1% **Note:** Replace the drive when this monitor is at 90%.	10 V: 100%
U4-08 (0068)	Heatsink Temperature	V/f OLV CLV CLV/PM Shows the heatsink temperature of the drive. Unit: 1 °C	10 V: 100 °C
U4-09 (005E)	LED Check	V/f OLV CLV CLV/PM Turns on the LED Status Ring and all of the keypad LEDs to make sure that the LEDs operate correctly. **Note:** A damaged LED Status Ring board will prevent an accurate estimate of the internal status of the drive. Do not use only the LED Status Ring to estimate the status of the drive and motors. 1. Set *o2-24 = 0 [LED Light Function Selection = Enable Status Ring & Keypad LED]*. 2. Push  when *U4-09* is the top monitor shown on the keypad. All LEDs on the keypad and LED Status Ring will turn on. **Note:** When Safety input 2 CH is open (STo), READY will flash.	No signal output available
U4-10 (005C)	kWh, Lower 4 Digits	V/f OLV CLV CLV/PM Shows the lower 4 digits of the watt hour value for the drive. Unit: 0.1 kWh **Note:** The watt hour is a 9-digit number. Monitor *U4-11 [kWh, Upper 5 Digits]* shows the upper 5 digits and *U4-10* shows the lower 4 digits. Example for 12345678.9 kWh: *U4-10*: 678.9 kWh *U4-11*: 12345 MWh	No signal output available
U4-11 (005D)	kWh, Upper 5 Digits	V/f OLV CLV CLV/PM Shows the upper 5 digits of the watt hour value for the drive. Unit: 1 MWh **Note:** Monitor *U4-11* shows the upper 5 digits and *U4-10 [kWh, Lower 4 Digits]* shows the lower 4 digits. Example for 12345678.9 kWh: *U4-10*: 678.9 kWh *U4-11*: 12345 MWh	No signal output available
U4-13 (07CF)	Peak Hold Current	V/f OLV CLV CLV/PM Shows the hold value of the peak value (rms) for the drive output current. Use *U4-14 [PeakHold Output Spd]* to show the drive output speed at the time that the drive holds the output current. The drive will hold the peak hold current at the next start up and restart of the power supply. The drive keeps the value that was under hold during baseblock (during stop). The keypad shows the value of *U4-13* in amperes (A). When you use MEMOBUS/Modbus communications to show the monitor, the current is "8192 = continuous rated output current (A)". Use the formula: "Numerals being displayed / 8192 × continuous rated output current (A)" to use the MEMOBUS/Modbus communication current value shown in the monitor. Unit: When the drive model changes, the display units for this parameter also change: • 0.01 A: 2022 - 2041, 4012 - 4023 • 0.1 A: 2059 - 2519, 4030 - 4380	No signal output available
U4-14 (07D0)	PeakHold Output Spd	V/f OLV CLV CLV/PM Shows the output speed at which the peak value (rms) of the drive output current is held. Use *U4-13 [Peak Hold Current]* to monitor the peak hold current. The drive will clear the peak hold output speed at the next startup and restart of the power supply. The drive keeps the value that was under hold during baseblock (during stop). Unit: When *o1-03 [Speed Display Unit Selection]* changes, the display units for this parameter also change: • *o1-03 = 0 [0.01 Hz]*: 0.01 Hz • *o1-03 = 4 [Elevator Unit1 - m/s, s, s] or 5 [Elevator Unit2 - m/(s, s^2, s^3)]*: 0.01 m/s • *o1-03 = 6 [Elevator Unit3-ft/(min,s^2,s^3)]*: 0.1 ft/min	No signal output available
U4-16 (07D8)	Motor oL1 Level	V/f OLV CLV CLV/PM Shows the integrated value of *oL1 [Motor Overload]* as a percentage of *oL1* detection level. Unit: 0.1%	10 V: 100%
U4-17 (07D9)	Drive oL2 Level	V/f OLV CLV CLV/PM Shows the integrated value of *oL2 [Drive Overload]* as a percentage of *oL2* detection level. Unit: 0.1%	No signal output available

No. (Hex.)	Name	Description	MFAO Signal Level
U4-18 (07DA)	Speed Ref Source	V/f OLV CLV CLV/PM Shows the selected speed reference source. The keypad shows the speed reference source as “XY-nn” as specified by these rules: X: Speed reference • 1: *b1-01 [Speed Reference Selection 1]* Y-nn: Speed reference source • 0-01: Keypad (*d1-01 [Reference 1]*) • 1-00: Analog input (unassigned) • 1-01: MFAI terminal A1 • 1-02: MFAI terminal A2 • 1-03: MFAI terminal A3 • 2-00: Multi-step speed reference (unassigned) • 2-02 to 2-08, 2-19 to 2-26: Multi-step speed reference (*d1-02 to d1-08 [Reference 2 to 8], d1-19 to d1-26 [Nominal Speed to Leveling Speed]*) • 3-01: MEMOBUS/Modbus communications • 4-01: Communication option card	No signal output available
U4-19 (07DB)	Modbus Spd Ref (dec)	V/f OLV CLV CLV/PM Shows the speed reference sent to the drive from the MEMOBUS/Modbus communications as a decimal. Unit: When *o1-03 [Speed Display Unit Selection]* changes, the display units for this parameter also change: • *o1-03 = 0 [0.01 Hz]*: 0.01 Hz • *o1-03 = 4 [Elevator Unit1 - m/s, s, s] or 5 [Elevator Unit2 - m/(s, s^2, s^3)]*: 0.01 m/s • *o1-03 = 6 [Elevator Unit3-ft/(min,s^2,s^3)]*: 0.1 ft/min	10 V: Maximum frequency (Also available for -10 V to +10 V)
U4-20 (07DC)	Option Spd Ref(dec)	V/f OLV CLV CLV/PM Shows the speed reference sent to the drive from the communication option as a decimal. Unit: When *o1-03 [Speed Display Unit Selection]* changes, the display units for this parameter also change: • *o1-03 = 0 [0.01 Hz]*: 0.01 Hz • *o1-03 = 4 [Elevator Unit1 - m/s, s, s] or 5 [Elevator Unit2 - m/(s, s^2, s^3)]*: 0.01 m/s • *o1-03 = 6 [Elevator Unit3-ft/(min,s^2,s^3)]*: 0.1 ft/min	No signal output available
U4-21 (07DD)	Up/Down Cmd Source	V/f OLV CLV CLV/PM Shows the selected Up/Down command source. The keypad shows the Up/Down command source as “XY-nn” as specified by these rules: X: Up/Down command • 1: *b1-02 [Up/Down Command Selection 1]* Y: Up/Down command source • 0: Keypad • 1: Control circuit terminal • 3: MEMOBUS/Modbus communications • 4: Communication option card nn: Up/Down command limit status data • 00: No limit status. • 01: The Up/Down command was left ON when the drive stopped in Programming Mode. • 02: The Up/Down command was left ON when switching from LOCAL Mode to REMOTE Mode. • 03: The Up/Down command is in standby after the drive was energized until the soft charge bypass contactor turns ON. **Note:** The drive will detect *Uv1 [DC Bus Undervoltage]* or *Uv [Undervoltage]* if the soft charge bypass contactor does not turn ON after 10 s. • 04: Restart after run stop is prohibited. • 05: Emergency stop has been executed using the MFDI terminal. Or, the motor has ramped to stop by pressing the STOP key on the keypad. • 07: During baseblock while coast to stop with timer. • 08: Speed reference is below *E1-09 [Minimum Output Frequency]* during baseblock. • 09: Waiting for the Enter command from PLC.	No signal output available

No. (Hex.)	Name	Description	MFAO Signal Level
U4-22 (07DE)	Modbus CmdData (hex)	V/f OLV CLV CLV/PM Shows the operation signal (register 0001H) sent to the drive from MEMOBUS/Modbus communications as a 4-digit hexadecimal number (zero suppress). The keypad shows the operation signal as specified by these rules: bit0 : Up command/Stop bit1 : Down command/Stop bit2 : External fault bit3 : Fault Reset bit4 : Multi-function input 1 bit5 : Multi-function input 2 bit6 : Multi-function input 3 bit7 : Multi-function input 4 bit8 : Multi-function input 5 bit9 : Multi-function input 6 bitA : Multi-function input 7 bitB : Multi-function input 8 bitC : Multi-function input 9 bitD : Multi-function input 10 bitE : Not used (normal value of 0). bitF : Not used (normal value of 0).	No signal output available
U4-23 (07DF)	Option CmdData (hex)	V/f OLV CLV CLV/PM Shows the operation signal (register 0001H) sent to the drive from MEMOBUS/Modbus communications as a 4-digit hexadecimal number. The keypad shows the operation signal as specified by these rules: bit0 : Up command/Stop bit1 : Down command/Stop bit2 : External fault bit3 : Fault Reset bit4 : Multi-function input 1 bit5 : Multi-function input 2 bit6 : Multi-function input 3 bit7 : Multi-function input 4 bit8 : Multi-function input 5 bit9 : Multi-function input 6 bitA : Multi-function input 7 bitB : Multi-function input 8 bitC : Multi-function input 9 bitD : Multi-function input 10 bitE : Not used (normal value of 0). bitF : Not used (normal value of 0).	No signal output available
U4-24 (07E6)	Num of Travels(Low)	V/f OLV CLV CLV/PM Shows the lower 4 digits of the drive travel count. Unit: 1 time **Note:** The drive travel count is a 9-digit number. Monitor *U4-25 [Num of Travels(High)]* shows the upper 5 digits and *U4-24* shows the lower 4 digits.	No signal output available
U4-25 (07E7)	Num of Travels(High)	V/f OLV CLV CLV/PM Shows the upper 5 digits of the drive travel count. Unit: 1 time **Note:** The drive travel count is a 9-digit number. Monitor *U4-25* shows the upper 5 digits and *U4-24 [Num of Travels(Low)]* shows the lower 4 digits.	No signal output available
U4-26 (07E8)	Max Current @ Accel	V/f OLV CLV CLV/PM Shows the maximum current that occurred during acceleration. Unit: 0.1 A	No signal output available
U4-27 (07E9)	Max Current @ Decel	V/f OLV CLV CLV/PM Shows the maximum current that occurred during deceleration. Unit: 0.1 A	No signal output available
U4-28 (07EA)	Max Current @ Steady	V/f OLV CLV CLV/PM Shows the maximum current that occurred during ride at a top speed. Unit: 0.1 A	No signal output available
U4-29 (07ED)	Max Current@Leveling	V/f OLV CLV CLV/PM Shows the maximum current that occurred during ride at leveling speed. Unit: 0.1 A	No signal output available
U4-30 (07EE)	Slip Comp Value	V/f OLV CLV CLV/PM Shows the slip compensation value. Unit: 0.01%	No signal output available

No. (Hex.)	Name	Description	MFAO Signal Level
U4-31 (07EF)	Car Accel Rate	V/f OLV CLV CLV/PM Shows the car acceleration rate. Unit: When *o1-03 [Speed Display Unit Selection]* changes, the display units for this parameter also change: • *o1-03 = 6 [Elevator Unit3-ft/(min,s^2,s^3)]*: 0.1 ft/min • *o1-03 ≠ 6*: 0.01 m/s²	No signal output available
U4-40 (07FD)	Rescue Speed Limit	V/f OLV CLV CLV/PM Shows the speed limit for Rescue Operation based on how much power is in the backup battery or UPS. When the drive does not do Rescue Operation, this parameter shows 0%. Unit: 0.01%	No signal output available
U4-42 (0855)	Remaining Distance	V/f OLV CLV CLV/PM Shows the remaining distance during the Stop Distance Control. Unit: 1 mm **Note:** Parameter *o1-12 [Length Units]* sets the display units for this parameter. When *o1-12 = 1 [Inch Units]*, the units are inches.	10 V: S5-10 = 1: S5-11 S5-10 = 2: S5-12
U4-43 (0856)	Min.Dec.Distance (H)	V/f OLV CLV CLV/PM Shows the Minimum Deceleration Distance calculated by *E1-04 [Maximum Output Frequency]*. Unit: 1 mm **Note:** Parameter *o1-12 [Length Units]* sets the display units for this parameter. When *o1-12 = 1 [Inch Units]*, the units are inches.	No signal output available
U4-44 (0857)	Min.Stop Distance	V/f OLV CLV CLV/PM Shows the Minimum Stop Distance calculated by *d1-26 [Leveling Speed]*. Unit: 1 mm **Note:** Parameter *o1-12 [Length Units]* sets the display units for this parameter. When *o1-12 = 1 [Inch Units]*, the units are inches.	No signal output available
U4-47 (085A)	Min.Dec.Distance (M)	V/f OLV CLV CLV/PM Shows the Minimum Deceleration Distance calculated by *S5-16 [Direct Landing Mid Speed Level]*. Unit: 1 mm **Note:** Parameter *o1-12 [Length Units]* sets the display units for this parameter. When *o1-12 = 1 [Inch Units]*, the units are inches.	No signal output available
U4-48 (085B)	Min.Dec.Distance (L)	V/f OLV CLV CLV/PM Shows the Minimum Deceleration Distance calculated by *S5-17 [Direct Landing Low Speed Level]*. Unit: 1 mm **Note:** Parameter *o1-12 [Length Units]* sets the display units for this parameter. When *o1-12 = 1 [Inch Units]*, the units are inches.	No signal output available
U4-60 (3040)	Last Dir Chng Preset	V/f OLV CLV CLV/PM Shows the *o4-42 [TravelDirectChange Cnt PresetLvl]* value used as pre-set for the last counter reset. For example, when you set *o4-42 = 1000* to set one million direction changes as pre-set for the last counter reset, this parameter shows “1000”. Unit: 1000	No signal output available
U4-64 (3044)	RemainDirect ChngLow	V/f OLV CLV CLV/PM Shows the lower 3 digits of remaining Travel Direction Change Counter value. Unit: 1 time **Note:** The remaining Travel Direction Change Counter value is an 8-digit number from 0 to 65,535,000. Monitor *U4-65 [RemainDirectChngHigh]* shows the upper 5 digits and *U4-64* shows the lower 3 digits. The value counts down from a pre-set value set in *o4-42 [TravelDirectChange Cnt PresetLvl]*. Example for 12,498,760 times: *U4-64*: 760 *U4-65*: 12498	No signal output available
U4-65 (3045)	RemainDirectChngHigh	V/f OLV CLV CLV/PM Shows the upper 5 digits of remaining Travel Direction Change Counter value. Unit: 1000 times **Note:** The remaining Travel Direction Change Counter value is an 8-digit number from 0 to 65,535,000. Monitor *U4-65* shows the upper 5 digits and *U4-64 [RemainDirect ChngLow]* shows the lower 3 digits. The value counts down from a pre-set value set in *o4-42 [TravelDirectChange Cnt PresetLvl]*. Example for 12,498,760 times: *U4-64*: 760 *U4-65*: 12498	No signal output available

No. (Hex.)	Name	Description	MFAO Signal Level
U4-66 (3046)	TotalDirChng Low	V/f OLV CLV CLV/PM Shows the lower 3 digits of total Travel Direction Change Counter value. Unit: 1 time **Note:** The total Travel Direction Change Counter value is an 8-digit number from 0 to 65,535,999. Monitor *U4-67 [TotalDirChng High]* shows the upper 5 digits and *U4-66* shows the lower 3 digits. The value counts up from 0. Example for 12,498,760 times: *U4-66*: 760 *U4-67*: 12498	No signal output available
U4-67 (3047)	TotalDirChng High	V/f OLV CLV CLV/PM Shows the upper 5 digits of total Travel Direction Change Counter value. Unit: 1000 times **Note:** The total Travel Direction Change Counter value is an 8-digit number from 0 to 65,535,999. Monitor *U4-67* shows the upper 5 digits and *U4-66 [TotalDirChng Low]* shows the lower 3 digits. The value counts up from 0. Example for 12,498,760 times: *U4-66*: 760 *U4-67*: 12498	No signal output available
U4-68 (3048)	Est. Time To Service	V/f OLV CLV CLV/PM Shows the estimated number of days until the Travel Direction Change Counter value reaches 0 and you must replace the ropes. Unit: 1 day **Note:** The estimated number of days remaining until the replacement of ropes are calculated by this formula: Estimated days remaining = Travel Direction Change Counter value / average direction changes per day	No signal output available
U4-69 (306C)	Total TDCC Presets	V/f OLV CLV CLV/PM Shows the number of pre-set operations (includes reset to 0) of the Travel Direction Change Counter. The value wraps to 0 after it increments from 63.	No signal output available

◆ U6: Operation Status Monitors

No. (Hex.)	Name	Description	MFAO Signal Level
U6-01 (0051)	Iq Secondary Current	V/f OLV CLV CLV/PM Shows the value calculated for the motor secondary current (q-Axis) as a percentage of the motor rated secondary current. Unit: 0.1%	10 V: Motor secondary rated current (Also available for -10 V to +10 V)
U6-02 (0052)	Id ExcitationCurrent	V/f OLV CLV CLV/PM Shows the value calculated for the motor excitation current (d-Axis) as a percentage of the motor rated secondary current. Unit: 0.1%	10 V: Motor secondary rated current (Also available for -10 V to +10 V)
U6-03 (0054)	ASR Input	V/f OLV CLV CLV/PM Shows the ASR input value as a percentage of the maximum frequency. Unit: 0.01%	10 V: Maximum frequency (Also available for -10 V to +10 V)
U6-04 (0055)	ASR Output	V/f OLV CLV CLV/PM Shows the ASR output value as a percentage of the motor rated secondary current. Unit: 0.01%	10 V: Motor secondary rated current (Also available for -10 V to +10 V)
U6-05 (0059)	OutputVoltageRef: Vq	V/f OLV CLV CLV/PM Shows the drive internal voltage reference for motor secondary current control (q-Axis). Unit: 0.1 V	200 V Class: 10 V = 200 Vrms 400 V Class: 10 V = 400 Vrms (Also available for -10 V to +10 V)
U6-06 (005A)	OutputVoltageRef: Vd	V/f OLV CLV CLV/PM Shows the drive internal voltage reference for motor excitation current control (d-Axis). Unit: 0.1 V	200 V Class: 10 V = 200 Vrms 400 V Class: 10 V = 400 Vrms (Also available for -10 V to +10 V)
U6-07 (005F) Expert	q-Axis ACR Output	V/f OLV CLV CLV/PM Shows the output value for current control related to motor secondary current (q axis). Unit: 0.1%	200 V Class: 10 V = 200 Vrms 400 V Class: 10 V = 400 Vrms (Also available for -10 V to +10 V)

No. (Hex.)	Name	Description	MFAO Signal Level
U6-08 (0060) Expert	d-Axis ACR Output	V/f OLV CLV CLV/PM Shows the output value for current control related to motor excitation current (d axis). Unit: 0.1%	200 V Class: 10 V = 200 Vrms 400 V Class: 10 V = 400 Vrms (Also available for -10 V to +10 V)
U6-11 (07C6)	Iq SecondaryCurr Ref	V/f OLV CLV CLV/PM Shows the output value for current control related to the q-Axis Current Reference. Unit: 0.1%	10 V = Motor secondary rated current (Also available for -10 V to +10 V)
U6-12 (07C7)	Id ExcitationCur Ref	V/f OLV CLV CLV/PM Shows the output value for current control related to the d-Axis Current Reference. Unit: 0.1%	10 V = Motor secondary rated current (Also available for -10 V to +10 V)
U6-13 (07CA)	MagPolePosition(Enc)	V/f OLV CLV CLV/PM Shows the value of the flux position detection. Unit: 0.1°	10 V: 180° (Also available for -10 V to +10 V)
U6-18 (07CD)	Enc 1 Pulse Counter	V/f OLV CLV CLV/PM Shows the number of pulses for speed detection (PG1). Unit: 1 pulse	10 V: 65536
U6-22 (0062)	ZeroServo Pulse Move	V/f OLV CLV CLV/PM Shows the distance that the rotor moved from its last position when Zero Servo is available. The value shown in this monitor = 4 × [No. of PG pulses]. **Note:** It shows the number of moving PG pulses during *S1-04 [DC Inj/Pos Lock Time at Start]* at start. Unit: 1 pulse	10 V = Number of pulses per revolution (Also available for -10 V to +10 V)
U6-25 (006B) Expert	ASR Output Level	V/f OLV CLV CLV/PM Shows the primary delay filter input value of the ASR (speed control loop). Unit: 0.01%	No signal output available
U6-26 (006C) Expert	Feed Fwd Cont Output	V/f OLV CLV CLV/PM Shows the Feed Forward control output. Unit: 0.01%	No signal output available
U6-27 (006D) Expert	FeedFwd Estimate Spd	V/f OLV CLV CLV/PM Shows the feed forward estimated speed. Unit: When *o1-03 [Speed Display Unit Selection]* changes, the display units for this parameter also change: • *o1-03 = 0 [0.01 Hz]*: 0.01 Hz • *o1-03 = 4 [Elevator Unit1 - m/s, s, s] or 5 [Elevator Unit2 - m/(s, s^2, s^3)]*: 0.01 m/s • *o1-03 = 6 [Elevator Unit3-ft/(min,s^2,s^3)]*: 0.1 ft/min	No signal output available
U6-36 (0720) Expert	Comm Errors-Host	V/f OLV CLV CLV/PM Shows the number of inter-CPU communication errors. When you de-energize the drive, this value resets to 0.	No signal output available
U6-37 (0721) Expert	Comm Errors-Sensor	V/f OLV CLV CLV/PM Shows the number of inter-CPU communication errors. When you de-energize the drive, this value resets to 0.	No signal output available
U6-48 (072E) Expert	ASIC Comm Errors	V/f OLV CLV CLV/PM Shows the number of inter-ASIC communication errors detected by the ASIC. When you de-energize the drive, this value resets to 0.	No signal output available
U6-57 (07C4) Expert	PolePolarityDeterVal	V/f OLV CLV CLV/PM Shows the change from the integrated current when the drive finds the polarity. Unit: 1 **Note:** If the change from the integrated current is less than 819, increase *n8-84 [Polarity Detection Current]*. *U6-57 = 8192* is equivalent to the motor rated current.	No signal output available

◆ U9: Fault Trace

No. (Hex.)	Name	Description	MFAO Signal Level
U9-01 (0820)	2nd Last Fault	V/f OLV CLV CLV/PM Shows the second most recent fault.	No signal output available
U9-02 (0821)	Speed Ref@2nd Fault	V/f OLV CLV CLV/PM Shows the speed reference at the second most recent fault. Use *U1-01 [Speed Reference]* to monitor the speed reference value. Unit: When *o1-03 [Speed Display Unit Selection]* changes, the display units for this parameter also change: • *o1-03 = 0 [0.01 Hz]*: 0.01 Hz • *o1-03 = 4 [Elevator Unit1 - m/s, s, s] or 5 [Elevator Unit2 - m/(s, s^2, s^3)]*: 0.01 m/s • *o1-03 = 6 [Elevator Unit3-ft/(min,s^2,s^3)]*: 0.1 ft/min	No signal output available
U9-03 (0822)	Output Spd@2nd Fault	V/f OLV CLV CLV/PM Shows the output speed at the second most recent fault. Use *U1-02 [Output Speed]* to monitor the actual output speed. Unit: When *o1-03 [Speed Display Unit Selection]* changes, the display units for this parameter also change: • *o1-03 = 0 [0.01 Hz]*: 0.01 Hz • *o1-03 = 4 [Elevator Unit1 - m/s, s, s] or 5 [Elevator Unit2 - m/(s, s^2, s^3)]*: 0.01 m/s • *o1-03 = 6 [Elevator Unit3-ft/(min,s^2,s^3)]*: 0.1 ft/min	No signal output available
U9-04 (0823)	Output I @2nd Fault	V/f OLV CLV CLV/PM Shows the output current at the second most recent fault. Use *U1-03 [Output Current]* to monitor the output current. The keypad shows the value of *U1-03* in amperes (A). When you use MEMOBUS/Modbus communications to show the monitor, the current is "8192 = continuous rated output current (A)". Use the formula: "Numerals being displayed / 8192 × continuous rated output current (A)" to use the MEMOBUS/Modbus communication current value shown in the monitor. Unit: When the drive model changes, the display units for this parameter also change: • 0.01 A: 2022 - 2041, 4012 - 4023 • 0.1 A: 2059 - 2519, 4030 - 4380	No signal output available
U9-05 (0824)	MotorSpeed@2nd Fault	V/f OLV CLV CLV/PM Shows the motor speed at the second most recent fault. Use *U1-05 [Speed Feedback]* to monitor the motor speed. Unit: When *o1-03 [Speed Display Unit Selection]* changes, the display units for this parameter also change: • *o1-03 = 0 [0.01 Hz]*: 0.01 Hz • *o1-03 = 4 [Elevator Unit1 - m/s, s, s] or 5 [Elevator Unit2 - m/(s, s^2, s^3)]*: 0.01 m/s • *o1-03 = 6 [Elevator Unit3-ft/(min,s^2,s^3)]*: 0.1 ft/min	No signal output available
U9-06 (0825)	Output V@2nd Fault	V/f OLV CLV CLV/PM Shows the output voltage reference at the second most recent fault. Use *U1-06 [Output Voltage Ref]* to monitor the output voltage reference. Unit: 0.1 V	No signal output available
U9-07 (0826)	Vdc@2nd Fault	V/f OLV CLV CLV/PM Shows the DC bus voltage at the second most recent fault. Use *U1-07 [DC Bus Voltage]* to monitor the DC bus voltage. Unit: 1 V	No signal output available
U9-08 (0827)	Torque Ref@2nd Fault	V/f OLV CLV CLV/PM Shows the torque reference at the second most recent fault as a percentage of the motor rated torque. Use *U1-09 [Torque Reference]* to monitor the torque reference. Unit: 0.1%	No signal output available
U9-09 (0828)	Input Term@2nd Fault	V/f OLV CLV CLV/PM Shows the status of the MFDI terminals at the second most recent fault where 1 = ON and 0 = OFF. For example, *U9-09* shows "00000011" when terminals S1 and S2 are ON. Use *U1-10 [Input Terminal Status]* to monitor the MFDI terminal status. bit0 : Terminal S1 bit1 : Terminal S2 bit2 : Terminal S3 bit3 : Terminal S4 bit4 : Terminal S5 bit5 : Terminal S6 bit6 : Terminal S7 bit7 : Terminal S8	No signal output available

No. (Hex.)	Name	Description	MFAO Signal Level
U9-10 (0829)	Output Term@2ndFault	V/f OLV CLV CLV/PM Shows the status of the MFDO terminals at the second most recent fault where 1 = ON and 0 = OFF. For example, *U9-10* shows "00000011" when terminals M1 and M3 are ON. Use *U1-11 [Output Terminal Status]* to monitor the MFDO terminal status. bit0 : Terminal M1-M2 bit1 : Terminal M3-M4 bit2 : Terminal M5-M6 bit3 : Terminal P1-C1 bit4 : Terminal P2-C2 bit5 : Not used (normal value of 0). bit6 : Not used (normal value of 0). bit7 : Fault relay MA/MB-MC	No signal output available
U9-21 (1A74)	3rd Last Fault	V/f OLV CLV CLV/PM Shows the third most recent fault.	No signal output available
U9-22 (1A75)	Speed Ref@3rd Fault	V/f OLV CLV CLV/PM Shows the speed reference at the third most recent fault. Use *U1-01 [Speed Reference]* to monitor the speed reference value. Unit: When *o1-03 [Speed Display Unit Selection]* changes, the display units for this parameter also change: • *o1-03 = 0 [0.01 Hz]*: 0.01 Hz • *o1-03 = 4 [Elevator Unit1 - m/s, s, s] or 5 [Elevator Unit2 - m/(s, s^2, s^3)]*: 0.01 m/s • *o1-03 = 6 [Elevator Unit3-ft/(min,s^2,s^3)]*: 0.1 ft/min	No signal output available
U9-23 (1A76)	Output Spd@3rd Fault	V/f OLV CLV CLV/PM Shows the output speed at the third most recent fault. Use *U1-02 [Output Speed]* to monitor the actual output speed. Unit: When *o1-03 [Speed Display Unit Selection]* changes, the display units for this parameter also change: • *o1-03 = 0 [0.01 Hz]*: 0.01 Hz • *o1-03 = 4 [Elevator Unit1 - m/s, s, s] or 5 [Elevator Unit2 - m/(s, s^2, s^3)]*: 0.01 m/s • *o1-03 = 6 [Elevator Unit3-ft/(min,s^2,s^3)]*: 0.1 ft/min	No signal output available
U9-24 (1A77)	Output I @3rd Fault	V/f OLV CLV CLV/PM Shows the output current at the third most recent fault. Use *U1-03 [Output Current]* to monitor the output current. The keypad shows the value of *U1-03* in amperes (A). When you use MEMOBUS/Modbus communications to show the monitor, the current is "8192 = continuous rated output current (A)". Use the formula: "Numerals being displayed / 8192 × continuous rated output current (A)" to use the MEMOBUS/Modbus communication current value shown in the monitor. Unit: When the drive model changes, the display units for this parameter also change: • 0.01 A: 2022 - 2041, 4012 - 4023 • 0.1 A: 2059 - 2519, 4030 - 4380	No signal output available
U9-25 (1A78)	MotorSpeed@3rd Fault	V/f OLV CLV CLV/PM Shows the motor speed at the third most recent fault. Use *U1-05 [Speed Feedback]* to monitor the motor speed. Unit: When *o1-03 [Speed Display Unit Selection]* changes, the display units for this parameter also change: • *o1-03 = 0 [0.01 Hz]*: 0.01 Hz • *o1-03 = 4 [Elevator Unit1 - m/s, s, s] or 5 [Elevator Unit2 - m/(s, s^2, s^3)]*: 0.01 m/s • *o1-03 = 6 [Elevator Unit3-ft/(min,s^2,s^3)]*: 0.1 ft/min	No signal output available
U9-26 (1A79)	Output V@3rd Fault	V/f OLV CLV CLV/PM Shows the output voltage reference at the third most recent fault. Use *U1-06 [Output Voltage Ref]* to monitor the output voltage reference. Unit: 0.1 V	No signal output available
U9-27 (1A7A)	Vdc@3rd Fault	V/f OLV CLV CLV/PM Shows the DC bus voltage at the third most recent fault. Use *U1-07 [DC Bus Voltage]* to monitor the DC bus voltage. Unit: 1 V	No signal output available
U9-28 (1A7B)	Torque Ref@3rd Fault	V/f OLV CLV CLV/PM Shows the torque reference at the third most recent fault as a percentage of the motor rated torque. Use *U1-09 [Torque Reference]* to monitor the torque reference. Unit: 0.1%	No signal output available

No. (Hex.)	Name	Description	MFAO Signal Level
U9-29 (1A7C)	Input Term@3rd Fault	V/f OLV CLV CLV/PM Shows the status of the MFDI terminals at the third most recent fault where 1 = ON and 0 = OFF. For example, *U9-29* shows "00000011" when terminals S1 and S2 are ON. Use *U1-10 [Input Terminal Status]* to monitor the MFDI terminal status. bit0 : Terminal S1 bit1 : Terminal S2 bit2 : Terminal S3 bit3 : Terminal S4 bit4 : Terminal S5 bit5 : Terminal S6 bit6 : Terminal S7 bit7 : Terminal S8	No signal output available
U9-30 (1A7D)	Output Term@3rdFault	V/f OLV CLV CLV/PM Shows the status of the MFDO terminals at the third most recent fault where 1 = (ON) and 0 = (OFF). For example, *U9-30* shows "00000011" when terminals M1 and M3 are ON. Use *U1-11 [Output Terminal Status]* to monitor the MFDO terminal status. bit0 : Terminal M1-M2 bit1 : Terminal M3-M4 bit2 : Terminal M5-M6 bit3 : Terminal P1-C1 bit4 : Terminal P2-C2 bit5 : Not used (normal value of 0). bit6 : Not used (normal value of 0). bit7 : Fault relay MA/MB-MC	No signal output available

11.17 Parameters that Change from the Default Settings with A1-02 [Control Method Selection]

The values for the parameters in this table depend on the values for *A1-02*. When you change *A1-02*, the default settings will change.

No.	Name	Range	Unit	Control Method (A1-02 Setting)			
				V/f (0)	OLV (2)	CLV (3)	CLV/PM (7)
A2-01	User Parameter 1	-	-	A1-00	A1-00	A1-00	A1-00
A2-02	User Parameter 2	-	-	A1-02	A1-02	A1-02	A1-02
A2-03	User Parameter 3	-	-	C1-01	C1-01	C1-01	C1-01
A2-04	User Parameter 4	-	-	C1-02	C1-02	C1-02	C1-02
A2-05	User Parameter 5	-	-	C2-01	C2-01	C2-01	C2-01
A2-06	User Parameter 6	-	-	C2-02	C2-02	C2-02	C2-02
A2-07	User Parameter 7	-	-	C2-03	C2-03	C2-03	C2-03
A2-08	User Parameter 8	-	-	C2-04	C2-04	C2-04	C2-04
A2-09	User Parameter 9	-	-	C2-05	C2-05	C2-05	C2-05
A2-10	User Parameter 10	-	-	C6-03	C6-03	C5-01	C5-01
A2-11	User Parameter 11	-	-	d1-18	d1-18	C5-02	C5-02
A2-12	User Parameter 12	-	-	d1-24	d1-24	C6-03	C5-03
A2-13	User Parameter 13	-	-	d1-25	d1-25	d1-18	C5-04
A2-14	User Parameter 14	-	-	d1-26	d1-26	d1-24	C5-07
A2-15	User Parameter 15	-	-	d1-28	d1-28	d1-25	C5-19
A2-16	User Parameter 16	-	-	d1-29	d1-29	d1-26	C5-20
A2-17	User Parameter 17	-	-	E2-01	E2-01	d1-28	C6-03
A2-18	User Parameter 18	-	-	E2-03	E2-03	d1-29	d1-18
A2-19	User Parameter 19	-	-	S1-02	S1-02	F1-01	d1-24
A2-20	User Parameter 20	-	-	S1-03	S1-03	F1-05	d1-25
A2-21	User Parameter 21	-	-	S1-04	S1-04	S1-04	d1-26
A2-22	User Parameter 22	-	-	S1-06	S1-06	S1-06	d1-28
A2-23	User Parameter 23	-	-	S1-07	S1-07	S1-07	d1-29
A2-24	User Parameter 24	-	-	-	-	S3-02	F1-05
A2-25	User Parameter 25	-	-	-	-	S3-39	H3-03
A2-26	User Parameter 26	-	-	-	-	-	H3-04
A2-27	User Parameter 27	-	-	-	-	-	H3-11
A2-28	User Parameter 28	-	-	-	-	-	H3-12
A2-29	User Parameter 29	-	-	-	-	-	S1-04
A2-30	User Parameter 30	-	-	-	-	-	S1-05
A2-31	User Parameter 31	-	-	-	-	-	S3-02
A2-32	User Parameter 32	-	-	-	-	-	S3-39
C4-02	Torque Compensation Delay Time	0 - 60000	1 ms	200	50	-	-
C5-01	ASR Proportional Gain 1	0.00 - 300.00	0.01	-	-	40.00	3.00
C5-02	ASR Integral Time 1	0.000 - 60.000	0.001 s	-	-	0.500	0.300
C5-03	ASR Proportional Gain 2	0.00 - 300.00	0.01	-	-	20.00	3.00
C5-04	ASR Integral Time 2	0.000 - 60.000	0.001 s	-	-	0.500	0.500
C5-07	ASR Gain Switchover Speed	0.0 - 100.0	0.1%	-	-	0.0	2.0
C5-13	ASR Proportional Gain 3	0.00 - 300.00	0.01	-	-	40.00	3.00
C5-14	ASR Integral Time 3	0.000 - 10.000	0.001 s	-	-	0.500	0.300

No.	Name	Range	Unit	Control Method (A1-02 Setting)			
				V/f (0)	OLV (2)	CLV (3)	CLV/PM (7)
C5-17	Motor Inertia	0.0001 - 6.0000	0.0001 kgm²	-	-	-	0.010
C5-19	ASR P Gain during Position Lock	0.00 - 300.00	0.01	-	-	40.00	5.00
d6-03	Field Forcing Selection	0, 1	-	-	0	0	-
E1-04	Maximum Output Frequency	A1-02 = 0, 2, 3: 10.0 - 200.0 A1-02 = 7: 4.0 - 200.0	0.1 Hz/1 rpm *1	50.0	50.0	50.0	150
E1-05	Maximum Output Voltage	0.0 - 255.0 *2	0.1 V	190.0 *2	190.0 *2	190.0 *2	0.0
E1-06	Base Frequency	0.0 - 200.0	0.1 Hz/1 rpm *1	50.0	50.0	50.0	150
E1-07	Mid Point A Frequency	0.0 - 200.0	0.1 Hz	2.5	3.0	-	-
E1-08	Mid Point A Voltage	0.0 - 255.0 *2	0.1 V	15.0 *2 *3	14.4 *2	-	-
E1-09	Minimum Output Frequency	0.0 - 200.0	0.1 Hz/1 rpm *1	1.3	0.5	0.0	0
E1-10	Minimum Output Voltage	0.0 - 255.0 *2	0.1 V	9.0 *2 *3	3.0 *2	-	-
E1-11	Mid Point B Frequency	0.0 - 200.0	0.1 Hz/1 rpm *1	0.0	0.0	0.0	-
E1-12	Mid Point A Voltage	0.0 - 255.0 *2	0.1 V	0.0	0.0	0.0	-
E1-13	Base Voltage	0.0 - 255.0 *2	0.1 V	0.0	0.0	0.0	-
F1-01	Encoder 1 Pulse Count (PPR)	A1-02 = 3: 1 - 60000 A1-02 = 7: 1 - 20000	1 ppr	-	-	1024	2048
F1-04	Speed Deviation Detection Select	0 - 3	1	-	-	3	1
F1-05	Encoder 1 Rotation Selection	0, 1	1	-	-	0	1
L1-01	Motor Overload (oL1) Protection	A1-02 = 0, 2, 3: 0 - 3, 6 A1-02 = 7: 0, 5	1	1	1	1	5
n5-02	Motor Inertia Acceleration Ramp	0.001 - 10.000	0.001 s	-	-	*4	0.100
o1-04	V/f Pattern Display Unit	0, 1	1	-	-	0	1
o1-24	Custom Monitor 1	0 - 999	1	101	101	101	101
o1-25	Custom Monitor 2	0 - 999	1	102	105	105	105
o1-26	Custom Monitor 3	0 - 999	1	103	103	103	103
o1-27	Custom Monitor 4	0 - 999	1	116	102	102	102
o1-28	Custom Monitor 5	0 - 999	1	112	112	112	112
o1-29	Custom Monitor 6	0 - 999	1	106	106	106	106
o1-30	Custom Monitor 7	0 - 999	1	107	107	107	107
o1-31	Custom Monitor 8	0 - 999	1	108	109	109	109
o1-32	Custom Monitor 9	0 - 999	1	413	413	413	413
o1-33	Custom Monitor 10	0 - 999	1	140	140	140	140
o1-34	Custom Monitor 11	0 - 999	1	141	141	141	141
o1-35	Custom Monitor 12	0 - 999	1	111	111	111	111
o5-07	Log Monitor Data 5	0 - 999	1	0	0	109	109
o5-08	Log Monitor Data 6	0 - 999	1	116	116	105	105
S1-01	Zero Speed Level at Stop	0.000 - 9.999	0.001%	2.400	1.000	0.200	0.350
S1-04	DC Inj/Pos Lock Time at Start	0.00 - 10.00	0.01 s	0.40	0.40	0.40	0.80
S3-02	Position Lock Gain 2 at Start	0.00 - 100.00	0.01	-	-	0.00	1.00
S3-16	Torque Limit Reduction Time@Stop	0 - 10000	1 ms	-	-	100 ms	300 ms
S4-04	Light Load Search Speed Ref.	0.00 - 20.00	0.01%	5.00	5.00	5.00	10.00

*1 The unit changes when *A1-02* and *o1-04* change. When *A1-02 = 7 [CLV/PM]*, the unit is “rpm”.
*2 This is the value for 200 V class drives. Double the value for 400 V class drives.
*3 The default setting changes when the drive model changes.
*4 The default setting changes when *o2-04 [Drive Model (KVA) Selection]* changes.

11.18 Parameters Changed by E1-03 [V/f Pattern Selection]

The values for *A1-02 [Control Method Selection]* and *E1-03 [V/f Pattern Selection]* change the default settings for the parameters in these tables:

Table 11.1 Parameters Changed by E1-03 (2022, 4012)

No.		E1-03	E1-04	E1-05 *1*	E1-06	E1-07	E1-08 *1*	E1-09	E1-10 *1*
Unit		-	Hz/rpm *2*	V	Hz/rpm *2*	Hz	V	Hz/rpm *2*	V
Control Method Selection (*A1-02* Setting)	V/f (0)	F	50.0	190.0	50.0	2.5	15.0	1.3	9.0
	OLV (2)	-	50.0	190.0	50.0	3.0	14.4	0.5	3.0
	CLV (3)	-	50.0	190.0	50.0	-	-	0.0	-
	CLV/PM (7)	-	150	0.0	150	-	-	0	-

*1 This is the value for 200 V class drives. Double the value for 400 V class drives.
*2 The unit changes when *A1-02* and *o1-04* change. When *A1-02 = 7 [CLV/PM]*, the unit is “rpm”.

Table 11.2 Parameters Changed by E1-03 (2031 - 2225, 4019 - 4114)

No.		E1-03	E1-04	E1-05 *1*	E1-06	E1-07	E1-08 *1*	E1-09	E1-10 *1*
Unit		-	Hz/rpm *2*	V	Hz/rpm *2*	Hz	V	Hz/rpm *2*	V
Control Method Selection (*A1-02* Setting)	V/f (0)	F	50.0	190.0	50.0	2.5	14.0	1.3	7.0
	OLV (2)	-	50.0	190.0	50.0	3.0	13.2	0.5	2.4
	CLV (3)	-	50.0	190.0	50.0	-	-	0.0	-
	CLV/PM (7)	-	150	0.0	150	-	-	0	-

*1 This is the value for 200 V class drives. Double the value for 400 V class drives.
*2 The unit changes when *A1-02* and *o1-04* change. When *A1-02 = 7 [CLV/PM]*, the unit is “rpm”.

Table 11.3 Parameters Changed by E1-03 (2269 - 2519, 4140 - 4380)

No.		E1-03	E1-04	E1-05 *1*	E1-06	E1-07	E1-08 *1*	E1-09	E1-10 *1*
Unit		-	Hz/rpm *2*	V	Hz/rpm *2*	Hz	V	Hz/rpm *2*	V
Control Method Selection (*A1-02* Setting)	V/f (0)	F	50.0	190.0	50.0	2.5	12.0	1.3	6.0
	OLV (2)	-	50.0	190.0	50.0	3.0	13.2	0.5	2.4
	CLV (3)	-	50.0	190.0	50.0	-	-	0.0	-
	CLV/PM (7)	-	150	0.0	150	-	-	0	-

11.19 Defaults by Drive Model

The values for the parameters in these tables depend on the values for *o2-04 [Drive Model (KVA) Selection]*. Changing the settings for *o2-04* will change the default settings.

◆ Three-Phase 200 V Class

No. *1	Name	Unit	Default				
-	Drive Model	-	2022	2031	2041	2059	2075
o2-04	Drive Model (KVA) Selection	Hex.	68	6A	6B	6D	6E
E2-11 (E4-11)	Motor Rated Power	kW	3.7	5.5	7.5	11	15
C5-17	Motor Inertia	kgm²	0.0158	0.026	0.037	0.053	0.076
C6-03	Carrier Frequency	kHz	8.0	8.0	8.0	8.0	8.0
E2-01 (E4-01)	Motor Rated Current (FLA)	A	14	19.6	26.6	39.7	53
E2-02 (E4-02)	Motor Rated Slip	Hz	2.73	1.5	1.3	1.7	1.6
E2-03 (E4-03)	Motor No-Load Current	A	4.5	5.1	8	11.2	15.2
E2-05 (E4-05)	Motor Line-to-Line Resistance	Ω	0.771	0.399	0.288	0.23	0.138
E2-06 (E4-06)	Motor Leakage Inductance	%	19.6	18.2	15.5	19.5	17.2
E2-10	Motor Iron Loss	W	112	172	262	245	272
E2-11	Motor Rated Power	kW	3.7	5.5	7.5	11	15
E5-02	PM Motor Rated Power	kW	3.7	5.5	7.5	11	15
E5-03	PM Motor Rated Current (FLA)	A	14.6	20.0	29.3	37.9	53.2
E5-05	PM Motor Resistance (ohms/ phase)	Ω	0.331	0.370	0.223	0.153	0.095
E5-06	PM d-axis Inductance (mH/ phase)	mH	4.78	5.39	3.58	3.46	2.46
E5-07	PM q-axis Inductance (mH/ phase)	mH	6.52	7.36	4.89	4.96	3.70
E5-09	PM Back-EMF Vpeak (mV/(rad/s))	-	239.3	254.3	237.0	270.0	254.3
L2-05	Undervoltage Detection Lvl (Uv1)	V	190	190	190	190	190
L8-02	Overheat Alarm Level	°C	110	100	130	115	115
L8-06	Input Phase Loss Detection Level	%	14	17	20	21	20
L8-09	Output Ground Fault Detection	-	1	1	1	1	1
L8-38	Carrier Frequency Reduction	-	3	3	3	3	3
L8-39	Reduced Carrier Frequency	kHz	2.0	2.0	2.0	2.0	2.0
n5-02	Motor Inertia Acceleration Ramp	s	0.154	0.168	0.175	0.265	0.244

*1 Parameters in parentheses are for motor 2.

No. *1	Name	Unit	Default				
-	Drive Model	-	2094	2110	2144	2181	2225
o2-04	Drive Model (KVA) Selection	Hex.	6F	70	72	73	74
E2-11 (E4-11)	Motor Rated Power	kW	18.5	22	30	37	45
C5-17	Motor Inertia	kgm²	0.138	0.165	0.220	0.273	0.333
C6-03	Carrier Frequency	kHz	8.0	8.0	8.0	5.0	5.0
E2-01 (E4-01)	Motor Rated Current (FLA)	A	65.8	77.2	105	131	160
E2-02 (E4-02)	Motor Rated Slip	Hz	1.67	1.7	1.8	1.33	1.6
E2-03 (E4-03)	Motor No-Load Current	A	15.7	18.5	21.9	38.2	44
E2-05 (E4-05)	Motor Line-to-Line Resistance	Ω	0.101	0.079	0.064	0.039	0.03
E2-06 (E4-06)	Motor Leakage Inductance	%	20.1	19.5	20.8	18.8	20.2
E2-10	Motor Iron Loss	W	505	538	699	823	852
E2-11	Motor Rated Power	kW	18.5	22	30	37	45
E5-02	PM Motor Rated Power	kW	18.5	22	30	37	45
E5-03	PM Motor Rated Current (FLA)	A	65.0	76.4	103.5	133.1	149.4
E5-05	PM Motor Resistance (ohms/ phase)	Ω	0.069	0.054	0.041	0.027	0.022
E5-06	PM d-axis Inductance (mH/ phase)	mH	1.99	1.70	1.29	0.91	0.90
E5-07	PM q-axis Inductance (mH/ phase)	mH	2.99	2.55	2.00	1.41	1.39
E5-09	PM Back-EMF Vpeak (mV/(rad/s))	-	256.7	261.1	260.4	245.1	276.0
L2-05	Undervoltage Detection Lvl (Uv1)	V	190	190	190	190	190
L8-02	Overheat Alarm Level	°C	120	110	110	105	105
L8-06	Input Phase Loss Detection Level	%	21	21	16	27	28
L8-09	Output Ground Fault Detection	-	1	1	1	1	1
L8-38	Carrier Frequency Reduction	-	3	3	3	3	3
L8-39	Reduced Carrier Frequency	kHz	2.0	2.0	2.0	2.0	2.0
n5-02	Motor Inertia Acceleration Ramp	s	0.317	0.355	0.323	0.32	0.387

*1 Parameters in parentheses are for motor 2.

No. *1	Name	Unit	Default			
-	Drive Model	-	2269	2354	2432	2519
o2-04	Drive Model (KVA) Selection	Hex.	75	76	77	78
E2-11 (E4-11)	Motor Rated Power	kW	55	75	90	110
C5-17	Motor Inertia	kgm²	0.49	0.90	1.10	1.90
C6-03	Carrier Frequency	kHz	5.0	5.0	5.0	5.0
E2-01 (E4-01)	Motor Rated Current (FLA)	A	190	260	260	260

No. *1	Name	Unit	Default			
-	Drive Model	-	2269	2354	2432	2519
o2-04	Drive Model (KVA) Selection	Hex.	75	76	77	78
E2-11 (E4-11)	Motor Rated Power	kW	55	75	90	110
E2-02 (E4-02)	Motor Rated Slip	Hz	1.43	1.39	1.39	1.39
E2-03 (E4-03)	Motor No-Load Current	A	45.6	72	72	72
E2-05 (E4-05)	Motor Line-to-Line Resistance	Ω	0.022	0.023	0.023	0.023
E2-06 (E4-06)	Motor Leakage Inductance	%	20.5	20	20	20
E2-10	Motor Iron Loss	W	960	1200	1200	1200
E2-11	Motor Rated Power	kW	55	75	90	110
E5-02	PM Motor Rated Power	kW	55	75	90	110
E5-03	PM Motor Rated Current (FLA)	A	181.6	181.6	181.6	181.6
E5-05	PM Motor Resistance (ohms/phase)	Ω	0.016	0.016	0.016	0.016
E5-06	PM d-axis Inductance (mH/phase)	mH	0.72	0.72	0.72	0.72
E5-07	PM q-axis Inductance (mH/phase)	mH	1.11	1.11	1.11	1.11
E5-09	PM Back-EMF Vpeak (mV/(rad/s))	-	277.1	277.1	277.1	277.1
L2-05	Undervoltage Detection Lvl (Uv1)	V	190	190	190	190
L8-02	Overheat Alarm Level	°C	100	110	95	120
L8-06	Input Phase Loss Detection Level	%	17	16	24	22
L8-09	Output Ground Fault Detection	-	1	1	1	1
L8-38	Carrier Frequency Reduction	-	3	3	3	3
L8-39	Reduced Carrier Frequency	kHz	2.0	2.0	2.0	2.0
n5-02	Motor Inertia Acceleration Ramp	s	0.317	0.533	0.592	0.646

*1 Parameters in parentheses are for motor 2.

◆ Three-Phase 400 V Class

No. *1	Name	Unit	Default				
-	Drive Model	-	4012	4019	4023	4030	4039
o2-04	Drive Model (KVA) Selection	Hex.	97	99	9A	9C	9D
E2-11 (E4-11)	Motor Rated Power	kW	3.7	5.5	7.5	11	15
C5-17	Motor Inertia	kgm^2	0.0158	0.026	0.037	0.053	0.076
C6-03	Carrier Frequency	kHz	8.0	8.0	8.0	8.0	8.0
E2-01 (E4-01)	Motor Rated Current (FLA)	A	7.0	9.8	13.3	19.9	26.5
E2-02 (E4-02)	Motor Rated Slip	Hz	2.7	1.5	1.3	1.7	1.6
E2-03 (E4-03)	Motor No-Load Current	A	2.3	2.6	4.0	5.6	7.6
E2-05 (E4-05)	Motor Line-to-Line Resistance	Ω	3.333	1.595	1.152	0.922	0.55

No. *1	Name	Unit	Default				
-	Drive Model	-	4012	4019	4023	4030	4039
o2-04	Drive Model (KVA) Selection	Hex.	97	99	9A	9C	9D
E2-11 (E4-11)	Motor Rated Power	kW	3.7	5.5	7.5	11	15
E2-06 (E4-06)	Motor Leakage Inductance	%	19.3	18.2	15.5	19.6	17.2
E2-10	Motor Iron Loss	W	130	193	263	385	440
E2-11	Motor Rated Power	kW	3.7	5.5	7.5	11.0	15.0
E5-02	PM Motor Rated Power	kW	3.7	5.5	7.5	11.0	15.0
E5-03	PM Motor Rated Current (FLA)	A	7.3	10.0	14.6	19.0	26.6
E5-05	PM Motor Resistance (ohms/ phase)	Ω	1.326	1.479	0.892	0.613	0.378
E5-06	PM d-axis Inductance (mH/ phase)	mH	19.11	21.58	14.33	13.84	9.85
E5-07	PM q-axis Inductance (mH/ phase)	mH	26.08	29.44	19.56	19.83	14.79
E5-09	PM Back-EMF Vpeak (mV/(rad/s))	-	47.86	50.84	47.39	54.00	50.84
L2-05	Undervoltage Detection Lvl (Uv1)	V	380	380	380	380	380
L8-02	Overheat Alarm Level	°C	103	115	115	130	130
L8-06	Input Phase Loss Detection Level	%	14.0	25.0	25.0	20.0	21.0
L8-09	Output Ground Fault Detection	-	1	1	1	1	1
L8-38	Carrier Frequency Reduction	-	3	3	3	3	3
L8-39	Reduced Carrier Frequency	kHz	2.0	2.0	2.0	2.0	2.0
n5-02	Motor Inertia Acceleration Ramp	s	0.154	0.168	0.175	0.265	0.244

*1 Parameters in parentheses are for motor 2.

No. *1	Name	Unit	Default				
-	Drive Model	-	4049	4056	4075	4094	4114
o2-04	Drive Model (KVA) Selection	Hex.	9E	9F	A1	A2	A3
E2-11 (E4-11)	Motor Rated Power	kW	18.5	22	30	47	45
C5-17	Motor Inertia	kgm²	0.138	0.165	0.220	0.273	0.333
C6-03	Carrier Frequency	kHz	8.0	8.0	8.0	5.0	5.0
E2-01 (E4-01)	Motor Rated Current (FLA)	A	32.9	38.6	52.3	65.6	79.7
E2-02 (E4-02)	Motor Rated Slip	Hz	1.67	1.7	1.8	1.33	1.6
E2-03 (E4-03)	Motor No-Load Current	A	7.8	9.2	10.9	19.1	22
E2-05 (E4-05)	Motor Line-to-Line Resistance	Ω	0.403	0.316	0.269	0.155	0.122
E2-06 (E4-06)	Motor Leakage Inductance	%	20.1	23.5	20.7	18.8	19.9
E2-10	Motor Iron Loss	W	508	586	750	925	1125
E2-11	Motor Rated Power	kW	18.5	22	30	37	45
E5-02	PM Motor Rated Power	kW	18.5	22	30	37	45

No. *1	Name	Unit	Default				
-	Drive Model	-	4049	4056	4075	4094	4114
o2-04	Drive Model (KVA) Selection	Hex.	9E	9F	A1	A2	A3
E2-11 (E4-11)	Motor Rated Power	kW	18.5	22	30	47	45
E5-03	PM Motor Rated Current (FLA)	A	32.5	38.2	51.8	66.6	74.7
E5-05	PM Motor Resistance (ohms/ phase)	Ω	0.276	0.217	0.165	0.107	0.087
E5-06	PM d-axis Inductance (mH/ phase)	mH	7.95	6.80	5.15	3.62	3.59
E5-07	PM q-axis Inductance (mH/ phase)	mH	11.94	10.22	8.00	5.63	5.55
E5-09	PM Back-EMF Vpeak (mV/(rad/s))	-	513.7	522.3	520.8	490.2	552.0
L2-05	Undervoltage Detection Lvl (Uv1)	V	380	380	380	380	380
L8-02	Overheat Alarm Level	°C	110	120	115	105	110
L8-06	Input Phase Loss Detection Level	%	26	18	17	21	20
L8-09	Output Ground Fault Detection	-	1	1	1	1	1
L8-38	Carrier Frequency Reduction	-	3	3	3	3	3
L8-39	Reduced Carrier Frequency	kHz	2.0	2.0	2.0	2.0	2.0
n5-02	Motor Inertia Acceleration Ramp	s	0.317	0.355	0.323	0.32	0.387

*1 Parameters in parentheses are for motor 2.

No. *1	Name	Unit	Default					
-	Drive Model	-	4140	4188	4225	4270	4325	4380
o2-04	Drive Model (KVA) Selection	Hex.	A4	A5	A6	A7	A8	A9
E2-11 (E4-11)	Motor Rated Power	kW	55	75	90	110	132	160
C5-17	Motor Inertia	kgm²	0.49	0.90	1.10	1.90	2.10	3.30
C6-03	Carrier Frequency	kHz	5.0	5.0	5.0	5.0	5.0	5.0
E2-01 (E4-01)	Motor Rated Current (FLA)	A	95	130	156	190	223	270
E2-02 (E4-02)	Motor Rated Slip	Hz	1.46	1.39	1.4	1.4	1.38	1.35
E2-03 (E4-03)	Motor No-Load Current	A	24	36	40	49	58	70
E2-05 (E4-05)	Motor Line-to-Line Resistance	Ω	0.088	0.092	0.056	0.046	0.035	0.029
E2-06 (E4-06)	Motor Leakage Inductance	%	20	20	20	20	20	20
E2-10	Motor Iron Loss	W	1260	1600	1760	2150	2350	2850
E2-11	Motor Rated Power	kW	55	75	90	110	132	160
E5-02	PM Motor Rated Power	kW	55	75	90	110	132	160
E5-03	PM Motor Rated Current (FLA)	A	90.8	130.0	130.0	130.0	130.0	130.0
E5-05	PM Motor Resistance (ohms/ phase)	Ω	0.064	0.022	0.022	0.022	0.022	0.022

No. *1	Name	Unit	Default					
-	Drive Model	-	4140	4188	4225	4270	4325	4380
o2-04	Drive Model (KVA) Selection	Hex.	A4	A5	A6	A7	A8	A9
E2-11 (E4-11)	Motor Rated Power	kW	55	75	90	110	132	160
E5-06	PM d-axis Inductance (mH/phase)	mH	2.87	1.80	1.80	1.80	1.80	1.80
E5-07	PM q-axis Inductance (mH/phase)	mH	4.44	2.80	2.80	2.80	2.80	2.80
E5-09	PM Back-EMF Vpeak (mV/(rad/s))	-	554.4	1280.0	1280.0	1280.0	1280.0	1280.0
L2-05	Undervoltage Detection Lvl (Uv1)	V	380	380	380	380	380	380
L8-02	Overheat Alarm Level	°C	100	110	105	110	100	95
L8-06	Input Phase Loss Detection Level	%	20	29	26	25	25	25
L8-09	Output Ground Fault Detection	-	1	1	1	1	1	1
L8-38	Carrier Frequency Reduction	-	3	3	3	3	3	3
L8-39	Reduced Carrier Frequency	kHz	2.0	2.0	2.0	2.0	2.0	2.0
n5-02	Motor Inertia Acceleration Ramp	s	0.317	0.533	0.592	0.646	0.673	0.777

*1 Parameters in parentheses are for motor 2.

11.20 Defaults and Setting Ranges Changed by o1-03 [Speed Display Unit Selection]

Table 11.4 shows parameters, default settings, and setting ranges that change according to *o1-03*.

Table 11.4 Defaults and Setting Ranges Changed by o1-03

No.	Name	o1-03 [Speed Display Unit Selection]							
		0 [0.01 Hz]	1 [0.01% (100% = E1-04)]	2 [Revolutions Per Minute (RPM)]	3 [User Units (o1-10 & o1-11)]	4 [Elevator Unit1 - m/s, s, s]	5 [Elevator Unit2 - m/(s, s^2, s^3)]	6 [Elevator Unit3-ft/(min, s^2,s^3)]	Default
C1-01	Acceleration Ramp 1	0.00 - 600.00 s *1					0.00 - *2 m/s²	0.00 - *2 ft/s²	1.50 s
C1-02	Deceleration Ramp 1								
C1-03	Acceleration Ramp 2								
C1-04	Deceleration Ramp 2								
C1-05	Acceleration Ramp 3								
C1-06	Deceleration Ramp 3								
C1-07	Acceleration Ramp 4								
C1-08	Deceleration Ramp 4								
C1-09	Emergency Stop Ramp								
C1-15	Inspection Deceleration Ramp								0.00 s
C2-01	Jerk @ Start of Accel	0.00 - 10.00 s					0.00 - *2 m/s³	0.00 - *2 ft/s³	0.50 s
C2-02	Jerk @ End of Accel								
C2-03	Jerk @ Start of Decel								
C2-04	Jerk @ End of Decel								
C2-05	Jerk below Leveling Speed								

No.	Name	o1-03 [Speed Display Unit Selection]							
		0 [0.01 Hz]	1 [0.01% (100% = E1-04)]	2 [Revolutions Per Minute (RPM)]	3 [User Units (o1-10 & o1-11)]	4 [Elevator Unit1 - m/s, s, s]	5 [Elevator Unit2 - m/(s, s^2, s^3)]	6 [Elevator Unit3-ft/(min, s^2,s^3)]	Default
d1-01	Reference 1	0.00 - E1-04 Hz	0.00 - 100.00%	0.00 - *3 r/min	User defined	0.00 - *2 m/s		0.00 - *2 ft/min	0.00%
d1-02	Reference 2								
d1-03	Reference 3								
d1-04	Reference 4								
d1-05	Reference 5								
d1-06	Reference 6								
d1-07	Reference 7								
d1-08	Reference 8								
d1-19	Nominal Speed								
d1-20	Intermediate Speed 1								100.00%
d1-21	Intermediate Speed 2								0.00%
d1-22	Intermediate Speed 3								
d1-23	Releveling Speed								
d1-24	Inspection Operation Speed								50.00%
d1-25	Rescue Operation Speed								10.00%
d1-26	Leveling Speed								8.00%

*1 The setting range changes when *C1-10 [Accel/Decel Ramp Setting Units]* changes. When *C1-10 = 1 [0.1 s (0.0 to 6000.0 s)]*, the setting range is 0.0 - 6000.0 s.

*2 The drive automatically calculates the maximum value from the values set in *o1-20 [Sheave Diameter]*, *o1-21 [Roping Ratio]*, *o1-22 [Mechanical Gear Ratio]*, and *E2-xx [Motor Parameters]*/*E5-xx [PM Motor Settings]*.

*3 The drive automatically calculates the maximum value from the values set in *E2-xx*/*E5-xx*.

12

Parameter Details

12.1 Section Safety 516
12.2 A: Initialization Parameters 517
12.3 b: Application 523
12.4 C: Tuning 534
12.5 d: References 550
12.6 E: Motor Parameters 556
12.7 F: Options 567
12.8 H: Terminal Functions 589
12.9 L: Protection Functions 632
12.10 n: Special Adjustment 654
12.11 o: Keypad-Related Settings 663
12.12 S: Elevator Parameters 685
12.13 T: Auto-Tuning 711

12.1 Section Safety

⚠DANGER

Do not ignore the safety messages in this manual.

If you ignore the safety messages in this manual, it will cause serious injury or death. The manufacturer is not responsible for injuries or damage to equipment.

12.2 A: Initialization Parameters

A parameters [Initialization Parameters] set the operating environment and operating conditions for the drive.

◆ A1: Initialization

A1 parameters set the operating environment and operating conditions for the drive. For example, these parameters set the keypad language, the control method, and the parameter access level for the drive.

■ A1-00: Language Selection

No. (Hex.)	Name	Description	Default (Range)
A1-00 (0100) RUN	Language Selection	V/f OLV CLV CLV/PM Sets the language for the LCD keypad.	7 (0 - 12)

Note:
- This parameter is only available when you use an LCD keypad or a Bluetooth LCD Keypad.
- When you use *A1-03 [Initialize Parameters]* to initialize the drive, the drive will not reset this parameter.

0 : English
1 : Japanese
2 : German
3 : French
4 : Italian
5 : Spanish
6 : Portuguese
7 : Chinese
8 : Czech
9 : Russian
10 : Turkish
11 : Polish
12 : Greek

■ A1-01: Access Level Selection

No. (Hex.)	Name	Description	Default (Range)
A1-01 (0101) RUN	Access Level Selection	V/f OLV CLV CLV/PM Sets user access to parameters. The access level controls which parameters the keypad will display, and which parameters the user can set.	2 (0 - 3)

0 : Operation Only
Access to *A1-00, A1-01, A1-04 [Password]*, and the *U Monitors*.

1 : User Parameters
Access to *A1-00, A1-01, A1-04*, and *A2-01 to A2-32 [User Parameters 1 to 32]*.

2 : Advanced Level
Access to all parameters, but not Expert Mode parameters.

3 : Expert Level
Access to all parameters including Expert Mode parameters.

Table 12.1 shows which keypad screens are available for each *A1-01* setting.

Table 12.1 Access Level and Available Keypad Screens

Mode	Keypad Screen	A1-01 Settings			
		0	1	2	3
Drive Mode	Monitors	Yes	Yes	Yes	Yes
Programming Mode	Parameters	Yes	Yes	Yes	Yes
	User Custom Parameters	No	Yes	Yes	Yes
	Parameter Backup/Restore	No	No	Yes	Yes
	Modified Parameters/Fault Log	No	No	Yes	Yes
	Auto-Tuning	No	No	Yes	Yes
	Initial Setup Screen	No	No	Yes	Yes
	Diagnostic Tools	No	No	Yes	Yes

Note:
- When you use *A1-04* and *A1-05 [Password Setting]* to set a password, you cannot change the values set in *A1-01 to A1-03* or *A2-01 to A2-32*.
- When you use MEMOBUS/Modbus communications, you must send the Enter command from the controller to the drive and complete the serial communication write process before you can use the keypad to change parameter settings.

■ A1-02: Control Method Selection

No. (Hex.)	Name	Description	Default (Range)
A1-02 (0102)	Control Method Selection	V/f OLV CLV CLV/PM Sets the control method for the drive application and the motor.	0 (0, 2, 3, 7)

Note:
When you change the control methods, the parameter values specified by *A1-02* are changed to their default values.

0 : V/f Control

Use this control method in these applications and conditions:

- For general variable-speed control applications in which a high level of responsiveness or high-precision speed control is not necessary.
- Applications in which more than one motor are connected to one drive
- When there is not sufficient data to set the motor parameters
- When it is not possible to do Auto-Tuning. The speed control range is 1:40.

2 : Open Loop Vector

Use this control method for general variable-speed control applications in which high-precision speed control is necessary. In this control method, a feedback signal from the motor is not necessary to have high torque response and high torque when you operate the drive at low speeds. The speed control range is 1:200.

3 : Closed Loop Vector

Use this control method for general variable-speed control applications in which these qualities are necessary:

- A high level of responsiveness
- High-precision speed control up to zero speed
- High-precision torque control. A speed feedback signal from the motor is necessary for this control method. The speed control range is 1:1500.

7 : PM Closed Loop Vector

The drive controls a PM motor in this control method. Use this control method for constant torque applications in which high-precision control with a PM motor is necessary. Also use this control method for general variable-speed control applications in which high torque response and high-precision torque control are necessary. A speed feedback signal from the motor is necessary for this control method. The speed control range is 1:1500.

■ A1-03: Initialize Parameters

No. (Hex.)	Name	Description	Default (Range)
A1-03 (0103)	Initialize Parameters	V/f OLV CLV CLV/PM Sets parameters to default values.	0 (0 - 2220)

Note:
- After you initialize the drive, the drive automatically sets *A1-03 = 0*.
- User Parameters can save the parameter values for your application and use these values as default values for drive initialization.
- To use the 2 motor switchover function, first turn OFF the terminal to which *H1-xx = 16 [MFDI Function Selection = Motor 2 Selection]* is set, then change the *A1-03* setting. An incorrect procedure will trigger *oPE08 [Parameter Selection Error]*.

0 : No Initialization

1110 : User Initialization

Sets parameters to the values set by the user as user settings. Set *o2-03 = 1 [User Parameter Default Value = Set defaults]* to save the user settings.

You can save the parameter settings that were adjusted for the test run as user-set default values to the drive. When you save the user settings and then change the parameter settings further, set *A1-03 = 1110* to reset to the saved parameter settings.

Follow this procedure to save User Parameter setting values, and to do a User Initialization.

1. Set parameters correctly for the application.
2. Set *o2-03 = 1 [User Parameter Default Value = Set defaults]*.
   This saves parameter settings for a User Initialization.
   The drive will then automatically set *o2-03 = 0*.
3. Set *A1-03 = 1110* to reset to the saved parameter settings.
   When you initialize the drive, the drive sets the parameter values to the User Parameter setting values.

2220 : 2-Wire Initialization

Resets all parameters to default settings with MFDI terminal S1 configured as Up Command and S2 configured as Down Command.

The drive will not initialize the parameters in Table 12.2 when *A1-03 = 2220*.

Table 12.2 Parameters that are not Initialized Using a 2-Wire Sequence

No.	Name
A1-00	Language Selection
A1-02	Control Method Selection
A1-12	Bluetooth ID
E1-03	V/f Pattern Selection
E5-02	PM Motor Rated Power
E5-03	PM Motor Rated Current (FLA)
E5-04	PM Motor Pole Count
E5-05	PM Motor Resistance (ohms/phase)
E5-06	PM d-axis Inductance (mH/phase)
E5-07	PM q-axis Inductance (mH/phase)
E5-09	PM Back-EMF Vpeak (mV/(rad/s))
E5-11	Encoder Z-Pulse Offset
E5-24	PM Back-EMF L-L Vrms (mV/rpm)
F6-08	Comm Parameter Reset @Initialize
F6-xx	Communication Option Parameters Set *F6-08 = 1 [Comm Parameter Reset @Initialize = Reset Back to Factory Default]* to initialize communication option parameters.
L8-35	Installation Method Selection
o2-04	Drive Model (KVA) Selection

Note:
- The drive does not initialize *A1-02* when *A1-03 = 2220*.
- When *A1-03 = 2220*, the drive automatically sets *A1-05 [Password Setting] = 0000*. Make sure that you set the password again for applications where a password is necessary.

■ A1-04: Password

No. (Hex.)	Name	Description	Default (Range)
A1-04 (0104)	Password	V/f OLV CLV CLV/PM Entry point for the password set in *A1-05 [Password Setting]*. You can view the settings of parameters that are locked without entering the password. Enter the correct password in this parameter to change parameter settings.	0000 (0000 - 9999)

If the password entered in *A1-04* does not agree with the password setting in *A1-05*, you cannot change these parameters:

- *A1-01 [Access Level Selection]*
- *A1-02 [Control Method Selection]*
- *A1-03 [Initialize Parameters]*
- *A2-01 to A2-32 [User Parameter 1 to 32]*

To lock parameter settings after you make changes without changing the password, enter an incorrect password in *A1-04* and push ENTER.

■ A1-05: Password Setting

No. (Hex.)	Name	Description	Default (Range)
A1-05 (0105)	Password Setting	V/f OLV CLV CLV/PM Set the password to lock parameters and prevent changes to parameter settings. Enter the correct password in *A1-04 [Password]* to unlock parameters and accept changes.	0000 (0000 - 9999)

This parameter locks these parameters:

- *A1-01 [Access Level Selection]*
- *A1-02 [Control Method Selection]*
- *A1-03 [Initialize Parameters]*
- *A2-01 to A2-32 [User Parameter 1 to 32]*

Note:

- Usually, the keypad will not show *A1-05*. To show and set *A1-05*, show *A1-04 [Password]* and then push STOP and DOWN on the keypad at the same time.
- After you set *A1-05*, the keypad will not show it again until you enter the correct password in *A1-04*. Make sure that you remember the *A1-05* setting value. If you do not know the *A1-05* setting value, contact Yaskawa or your nearest sales representative.
- When *A1-03 = 2220 [2-Wire Initialization]*, the drive is initialized to *A1-05 = 0000*. Make sure that you set the password again when a password is necessary for the application.
- Change the setting value in *A1-05* to change the password. The new setting value becomes the new password.
- When you use the password to unlock and change a parameter, enter a value other than the password in *A1-04* to lock the parameter again with the same password.
- If *A1-04* ≠ *A1-05*, MEMOBUS Communication cannot read or write *A1-05*.

Enter the Password to Unlock Parameters

Use this procedure to unlock parameter settings.

Set the password in *A1-05 [Password Setting]*, and show the Parameters Screen on the keypad.

This procedure verifies the password, and makes sure that the parameter settings are unlocked.

1. Push UP or DOWN to select “A: Initialization Parameters”, then push ENTER.
2. Push UP or DOWN to select *[A1-04]*, then push ENTER.
   You can now change parameter settings.
3. Push RIGHT or LEFT to move the digit and enter the password.
4. Push ENTER to confirm the password.
   The drive unlocks the parameters and automatically shows the Parameters Screen.
5. Push UP or DOWN to show *[A1-02]*, then push ENTER.
   The keypad shows the setting value for *[A1-02]*.
6. Push UP or DOWN to make sure that you can change the setting value.

Push F1 (Back) until the keypad shows the Parameters Screen.

■ A1-11: Firmware Update Lock

No. (Hex.)	Name	Description	Default (Range)
A1-11 (111D) Expert	Firmware Update Lock	V/f OLV CLV CLV/PM Protects the drive firmware. When you enable the protection, you cannot update the drive firmware.	0 (0, 1)

0 : Disabled

Lock is disabled.

1 : Enabled

Lock is enabled.

■ A1-12: Bluetooth ID

No. (Hex.)	Name	Description	Default (Range)
A1-12 (1564)	Bluetooth ID	V/f OLV CLV CLV/PM Sets the password necessary to use Bluetooth to control the drive with a smartphone or tablet.	1915 (0000 - 9999)

◆ A2: User Parameters

You can register frequently used parameters and recently changed parameters here to access them quickly. You can show the registered parameters in [User Custom Parameters] in the main menu.

■ A2-01 to A2-32: User Parameters 1 to 32

No. (Hex.)	Name	Description	Default (Range)
A2-01 to A2-32 (0106 - 0125)	User Parameters 1 to 32	V/f OLV CLV CLV/PM You can select a maximum of 32 parameters for the drive and set them to parameters *A2-01 to A2-32*. The [User Parameters] section of the keypad main menu shows the set parameters. You can immediately access these set parameters.	Determined by A1-02

Note:

You must set *A1-01 = 1 [Access Level Selection = User Parameters]* to access parameters *A2-01 to A2-32*.

The drive saves these parameters to *A2-01 to A2-32*.

- The drive saves a maximum of 32 parameters.

  Note:

  Set *A1-01 = 2 [Advanced Level]* or *A1-01 = 3 [Expert Level]* to save the necessary parameters.

- The drive automatically saves changed parameters to *A2-17 to A2-32*.

  Note:

  Set *A2-33 = 1 [User Parameter Auto Selection = Enabled: Auto Save Recent Parms]*.

When *A1-02 [Control Method Selection]* changes, the default settings for *A2-01 to A2-32* will also change. Refer to Table 12.3 for the default settings for each control method.

Table 12.3 Default Setting of User Parameters

User Parameter No.	Default			
	A1-02 = 0 [V/f]	A1-02 = 2 [OLV]	A1-02 = 3 [CLV]	A1-02 = 7 [CLV/PM]
A2-01	A1-00	A1-00	A1-00	A1-00
A2-02	A1-02	A1-02	A1-02	A1-02
A2-03	C1-01	C1-01	C1-01	C1-01
A2-04	C1-02	C1-02	C1-02	C1-02
A2-05	C2-01	C2-01	C2-01	C2-01
A2-06	C2-02	C2-02	C2-02	C2-02
A2-07	C2-03	C2-03	C2-03	C2-03
A2-08	C2-04	C2-04	C2-04	C2-04
A2-09	C2-05	C2-05	C2-05	C2-05

User Parameter No.	Default			
	A1-02 = 0 [V/f]	A1-02 = 2 [OLV]	A1-02 = 3 [CLV]	A1-02 = 7 [CLV/PM]
A2-10	C6-03	C6-03	C5-01	C5-01
A2-11	d1-18	d1-18	C5-02	C5-02
A2-12	d1-24	d1-24	C6-03	C5-03
A2-13	d1-25	d1-25	d1-18	C5-04
A2-14	d1-26	d1-26	d1-24	C5-07
A2-15	d1-28	d1-28	d1-25	C5-19
A2-16	d1-29	d1-29	d1-26	C5-20
A2-17	E2-01	E2-01	d1-28	C6-03
A2-18	E2-03	E2-03	d1-29	d1-18
A2-19	S1-02	S1-02	F1-01	d1-24
A2-20	S1-03	S1-03	F1-05	d1-25
A2-21	S1-04	S1-04	S1-04	d1-26
A2-22	S1-06	S1-06	S1-06	d1-28
A2-23	S1-07	S1-07	S1-07	d1-29
A2-24	-	-	S3-02	F1-05
A2-25	-	-	S3-39	H3-03
A2-26	-	-	-	H3-04
A2-27	-	-	-	H3-11
A2-28	-	-	-	H3-12
A2-29	-	-	-	S1-04
A2-30	-	-	-	S1-05
A2-31	-	-	-	S3-02
A2-32	-	-	-	S3-39

■ A2-33: User Parameter Auto Selection

No. (Hex.)	Name	Description	Default (Range)
A2-33 (0126)	User Parameter Auto Selection	V/f OLV CLV CLV/PM Sets the automatic save feature for changes to parameters *A2-17 to A2-32 [User Parameters 17 to 32]*.	0 (0, 1)

0 : Disabled: Manual Entry Required

Set User Parameters manually.

1 : Enabled: Auto Save Recent Parms

The drive automatically registers changed parameter *A2-17 to A2-32*. The drive automatically saves the most recently changed parameter to *A2-17*, and saves a maximum of 16 parameters. After the drive registers 16 parameters, when you save a new parameter, the drive will remove a parameter from the User Parameter list to make space for the new parameter. The drive removes parameters with First In, First Out.

You can show the registered parameters in [User Custom Parameters] in the main menu.

Note:

In General-Purpose Setup Mode, the drive saves parameters starting with *A2-27* because the drive saves parameters *A2-26* and lower by default.

12.3 b: Application

b parameters set these functions:

- Speed reference source and Up/Down command source
- Stopping method settings
- Magnetic Flux Compensation
- Timer Function
- Dwell function
- Droop control
- Energy Saving Control

◆ b1: Operation Mode Selection

b1 parameters set the operation mode for the drive.

■ b1-01: Speed Reference Selection 1

No. (Hex.)	Name	Description	Default (Range)
b1-01 (0180)	Speed Reference Selection 1	V/f OLV CLV CLV/PM Sets the input method for the speed reference.	0 (0 - 3)

⚠ WARNING Sudden Movement Hazard

Always turn OFF the Up/Down command before you change *b1-01 [Speed Reference Selection 1]*, *d1-18 [Speed Reference Selection Mode]*, or *H1-xx [MFDI Function Selection]*. If the Up/Down command is ON when you change these parameter settings, the motor can unexpectedly start to run and cause serious injury or death.

Note:

- Push LO/RE on the keypad to set the input mode to LOCAL and enter the speed reference from the keypad.
- When the drive receives a Up/Down command when the speed reference is 0 Hz or less than the *E1-09 [Minimum Output Frequency]* value, RUN on the keypad will flash. Examine the setting for the speed reference input and enter a value more than or equal to *E1-09*.

0 : Keypad

You can use these methods to enter the speed reference:

- To use the setting of *d1-18 [Speed Reference Selection Mode]* and MFDIs to switch between the speed references set to *d1-xx [Speed Reference]* parameters
  Refer to *Speed Selection Using Digital Inputs (b1-01 = 0) on page 170* and *d1: Speed Reference on page 550* for more information.
- To use the keypad to directly enter the speed reference

1 : Analog Input

You can use MFAI terminals A1, A2, and A3 to input an analog speed reference with a voltage or current input signal. To use this setting, set *H3-02, H3-06, or H3-10 [Terminal A1, A2, A3 Function Selection = Speed Reference]*.

When *b1-01 = 1*, the drive automatically sets *d1-18 = 0 [Multi-speed Mode1 (d1-01 to 08)]* to use multi-step speed references set in *d1-01 to d1-08 [Reference 1 to 8]*.

When *d1-18 = 0*, the drive uses speed references from MFAI terminals as the first speed.

Refer to *d1: Speed Reference on page 550* for more information.

- Voltage Input
  Refer to Table 12.4 to use a voltage signal input to one of the MFAI terminals.

Table 12.4 Speed Reference Voltage Input

Terminal	Terminal Signal Level	Parameter Settings				Note
		Signal Level Selection	Function Selection	Gain	Bias	
A1	0 - 10 V	H3-01 = 0	H3-02 = 0 [Speed Reference]	H3-03	H3-04	-
	-10 - +10 V	H3-01 = 1				
A2	0 - 10 V	H3-09 = 0	H3-10 = 0 [Speed Reference]	H3-11	H3-12	Set DIP switch S1 to "V" for voltage input.
	-10 - +10 V	H3-09 = 1				
A3	0 - 10 V	H3-05 = 0	H3-06 = 0 [Speed Reference]	H3-07	H3-08	Set DIP switch S4 to "AI" for analog input.
	-10 - +10 V	H3-05 = 1				

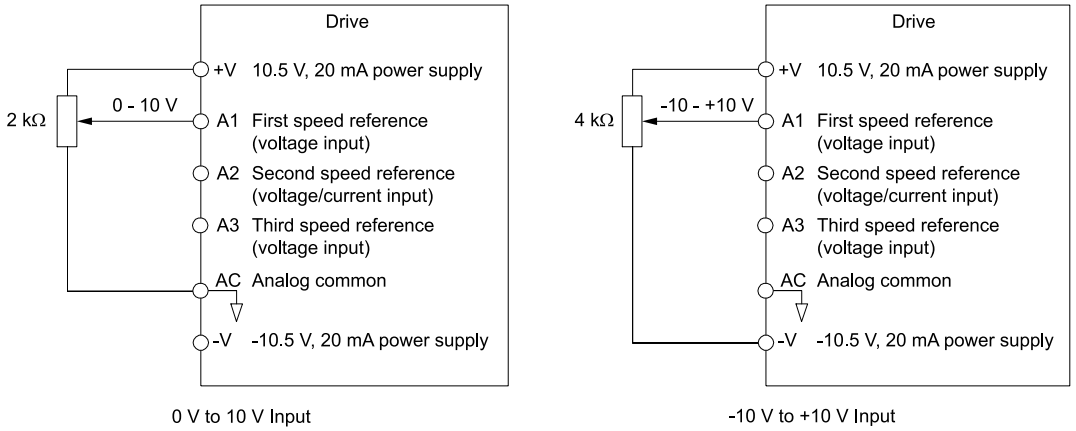

Figure 12.1 Example of Setting the Speed Reference with a Voltage Signal to Terminal A1

Note:
You can also use this diagram to wire terminals A2 and A3.

- Current Input
  Refer to Table 12.5 to use a current signal input to one of the MFAI terminals.

Table 12.5 Speed Reference Current Input

Terminal	Signal Level	Parameter Settings				Note
		Signal Level Selection	Function Selection	Gain	Bias	
A2	4 - 20 mA	H3-09 = 2	H3-10 = 0 [Speed Reference]	H3-11	H3-12	Set DIP switch S1 to "I" for current input.
	0 - 20 mA	H3-09 = 3				

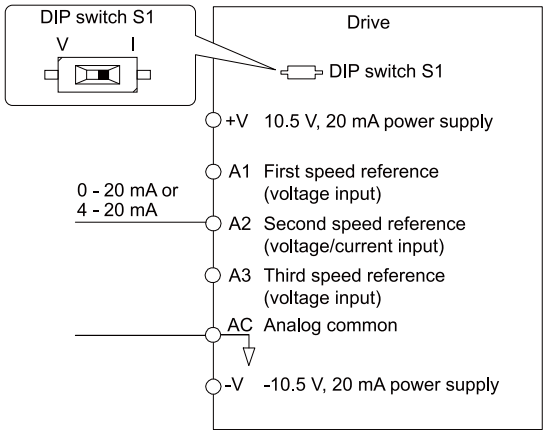

Figure 12.2 Example of Setting the Speed Reference with a Current Signal to Terminal A2

Note:
You can also use this diagram to wire terminals A1 and A3.

Changing between Master and Auxiliary Speed References

Use the multi-step speed reference function to change the speed reference input between terminals A1, A2, and A3.

2 : Memobus/Modbus Communications

You can use MEMOBUS/Modbus communications to enter the speed reference. To use this setting, set *d1-18 = 0*.

Refer to *d1: Speed Reference on page 550* for more information.

3 : Option PCB

You can use a communications option card or input option card connected to the drive to enter the Up/Down command. To use this setting, set *d1-18 = 0*.

Refer to *d1: Speed Reference on page 550* for more information. Refer to the instruction manual included with the option card to install and set the option card.

Note:

If *b1-01 = 3*, but you did not connect a communications option card, *oPE05 [Run Cmd/Freq Ref Source Sel Err]* will flash on the keypad.

■ b1-02: Up/Down Command Selection 1

No. (Hex.)	Name	Description	Default (Range)
b1-02 (0181)	Up/Down Command Selection 1	V/f OLV CLV CLV/PM Sets the input method for the Up/Down command.	1 (0 - 3)

0 : Keypad

The drive uses the keypad to enter the Up/Down command.

Note:

LO/RE on the keypad will illuminate when the keypad is the Up/Down command source.

1 : Digital Input

The drive uses the control circuit terminals to enter the Up/Down command. Select the input method for the Up/Down command with an *H1-xx* parameter. Set *H1-xx = 40 or 41 [Up Command or Down Command]*.

- 2-wire Sequence 1
  This sequence has two input types: Up/Stop and Down/Stop. Set *A1-03 = 2220 [Initialize Parameters = 2-Wire Initialization]* to initialize the drive and set terminals S1 and S2 for a 2-wire sequence.

2 : Memobus/Modbus Communications

The drive uses MEMOBUS/Modbus communications to enter the Up/Down command.

3 : Option PCB

The drive uses a communications or input option connected to the drive to enter the Up/Down command.

Refer to the instruction manual included with the option card to install and set the option card.

■ b1-03: Stopping Method Selection

No. (Hex.)	Name	Description	Default (Range)
b1-03 (0182)	Stopping Method Selection	V/f OLV CLV CLV/PM Sets the method to stop the motor after you remove an Up/Down command or enter a Stop command.	0 (0, 1, 4)

Note:

When *A1-02 = 0, 2 [Control Method Selection = V/f, OLV]*, the setting range is 0, 1.

Select the applicable stopping method for the application from these three options:

0 : Ramp to Stop

When you enter the Stop command or turn OFF the Up/Down command, the drive ramps the motor to stop.

The drive ramps the motor to stop as specified by the deceleration ramp. The default setting for the deceleration ramp is *C1-02 [Deceleration Ramp 1]*. The actual deceleration ramp changes as the load conditions change (for example, mechanical loss and inertia).

If the output speed is less than or equal to the value set in *S1-01 [Zero Speed Level at Stop]* during deceleration, the drive will do DC Injection Braking or Position Lock as specified by the control method.

- **Ramp to Stop with V/f and OLV Control Methods**
  Parameter *S1-01* sets the speed to start DC Injection Braking at stop. If the output speed is less than or equal to the value set in *S1-01* during deceleration, then the drive will do DC Injection Braking for the time set in *S1-05 [DC Inj/Pos Lock Time at Stop]*.

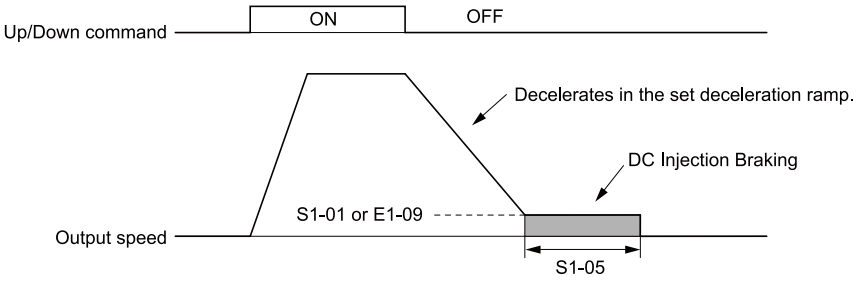

Figure 12.3 Ramp to Stop with V/f and OLV Control Methods

Note:
When *S1-01 ≤ E1-09 [Minimum Output Frequency]*, the drive will start DC Injection Braking from the frequency set in *E1-09*.

- **Ramp to Stop in CLV and CLV/PM Control Methods**
  Parameter *S1-01* sets the speed to start Position Lock at stop. When the output speed is less than or equal to the value set in *S1-01* during deceleration, the drive will do Position Lock for the time set in *S1-05*.

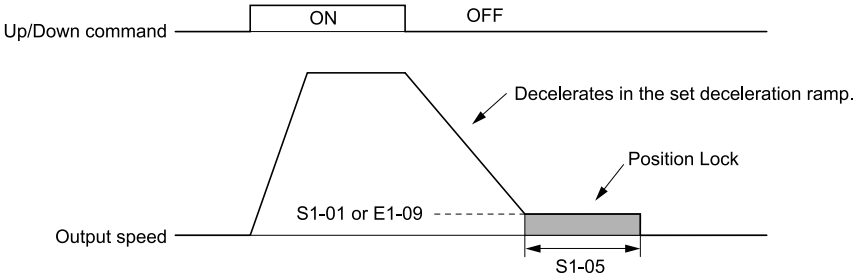

Figure 12.4 Ramp to Stop in CLV and CLV/PM Control Methods

Note:
When *S1-01 ≤ E1-09*, the drive will start Position Lock from the frequency set in *E1-09*.

1 : Coast to Stop

When you enter the Stop command or turn OFF the Up/Down command, the drive turns OFF the output and coasts the motor to stop.

Load conditions will have an effect on the deceleration rate as the motor coasts to stop (for example, mechanical loss and inertia).

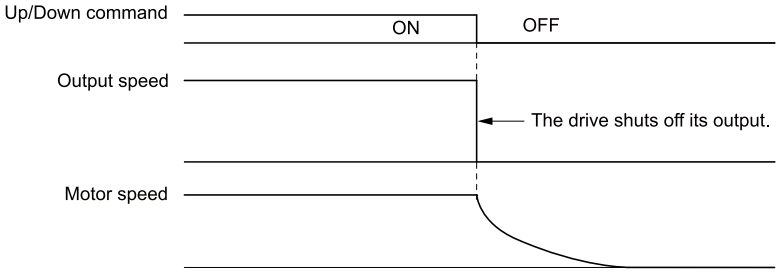

Figure 12.5 Coast to Stop

Note:
Do not enter the Up/Down command until the motor comes to a complete stop. Use DC Injection to restart the motor before it stops.

4 : Elevator Emergency Stop

When you enter the Stop command or turn OFF the Up/Down command, the drive uses different stopping methods for different conditions of *U1-05 [Speed Feedback]* and *S1-26 [Emergency Stop Start Level]*:

- When *U1-05 ≥ S1-26*, the drive coasts to stop.
- When *U1-05 < S1-26*, the drive ramps to stop.

Refer to *Elevator Emergency Stop on page 173* for more information about this function.

■ b1-06: Digital Input Reading

No. (Hex.)	Name	Description	Default (Range)
b1-06 (0185) Expert	Digital Input Reading	V/f OLV CLV CLV/PM Sets the number of times that the drive reads the sequence input command to prevent malfunction because of electrical interference.	1 (0, 1)

0 : Single Scan

The drive reads the terminal status one time. The drive immediately reads all changes to the terminal status.

This setting lets the drive quickly respond to changes in the sequence, but noise can cause malfunction.

1 : Double Scan

The drive reads all changes to the terminal status two times to make sure that the reading is the same.

The drive responds slower than when it reads the sequence one time, but this setting prevents malfunction because of electrical interference.

■ b1-08: Up/Down Select in PRG Mode

No. (Hex.)	Name	Description	Default (Range)
b1-08 (0187) Expert	Up/Down Select in PRG Mode	V/f OLV CLV CLV/PM Sets the conditions for the drive to accept an Up/Down command entered from an external source when you use the keypad to set parameters.	0 0 (0 - 2)

As a safety precaution, when the drive is in Programming Mode, it will not respond to an Up/Down command.

This parameter helps prevent accidents that can occur if the motor starts to rotate because the drive received an Up/Down command from an external source while you are programming the drive. You can also set the drive to not show the Programming Mode when an Up/Down command is active.

Note:

Refer to this table for Drive Mode and Programming Mode functions.

Mode	Menu Screen	Function
Programming Mode	User Custom Parameters	Shows the User Parameters.
	Parameters	Changes parameter settings.
	Modified Parameters/Fault Log	Shows modified parameters and fault history.
Drive Mode	Monitors	Sets monitor items to display.
Programming Mode	Auto-Tuning	Auto-Tunes the drive.
	Diagnostic Tools	• Sets data logs and backlight. • Does the Rotation Direction Trouble Shoot.
	Parameter Backup/Restore	Saves parameters to the keypad as backup.
	Initial Setup	• Changes initial settings. • Uses the Setup Wizard to set basic parameters.

0 : Disregard RUN while Programming

The drive does not accept the Up/Down command when setting the parameters in Programming Mode.

1 : Accept RUN while Programming

The drive accepts an Up/Down command entered from an external source when setting the parameters in Programming Mode.

2 : Allow Programming Only at Stop

The drive does not allow the user to enter the Programming Mode while the drive is operating. The keypad does not display the Programming Mode while the drive is operating.

■ b1-14: Phase Order Selection

No. (Hex.)	Name	Description	Default (Range)
b1-14 (01C3)	Phase Order Selection	V/f OLV CLV CLV/PM Sets the phase order for output terminals U/T1, V/T2, and W/T3. This parameter can align the Up command from the drive and the up direction of the motor without changing wiring.	0 (0, 1)

Note:

If you cannot set the motor rotation direction correctly, use Rotation Direction Trouble Shoot Function to solve the problem. Refer to *Rotation Direction Trouble Shoot Function on page 167* for more information about the function.

0 : Standard

1 : Switch Phase Order

■ b1-35: Digital Input Deadband Time

No. (Hex.)	Name	Description	Default (Range)
b1-35 (1117) Expert	Digital Input Deadband Time	V/f OLV CLV CLV/PM Sets the deadband time for MFDIs.	0.0 ms (0.0 - 100.0 ms)

When the ON/OFF time for MFDIs is longer than the time set in *b1-35*, the drive activates the MFDI. Set this parameter to prevent malfunctions caused by relay chattering for applications in which relays send input to MFDI terminals.

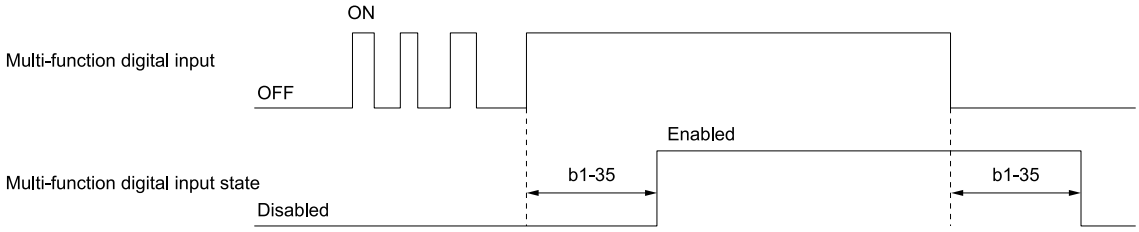

◆ b2: Magnetic Flux Compensation

b2 parameter sets the Magnetic Flux Compensation function.

■ b2-08: Magnetic Flux Compensation Value

No. (Hex.)	Name	Description	Default (Range)
b2-08 (0190) Expert	Magnetic Flux Compensation Value	V/f OLV CLV CLV/PM Sets how much current the drive injects when DC Injection Braking at Start starts (Initial Excitation) as a percentage of *E2-03 [Motor No-Load Current]*.	0% (0 - 1000%)

This parameter is effective when you start a high-capacity motor (a motor with a large secondary circuit time constant). This function can quickly increase motor flux to make high starting torque (a process called initial excitation).

The current level for DC Injection Braking at start changes linearly from the setting of *b2-08* to the setting of *S1-04 [DC Inj/Pos LockTime at Start]* as shown in Figure 12.6.

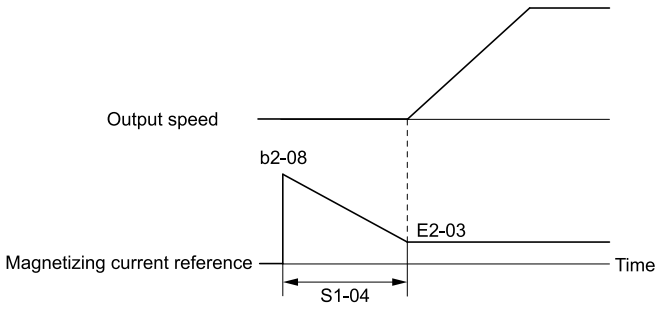

Figure 12.6 DC Current Level during DC Injection Braking at Start

Note:
- If *b2-08 < 100%*, flux will develop very slowly.
- When *b2-08 = 0%*, the DC current level will be the DC Injection current set in *S1-02 [DC Injection Current at Start]* and *S1-03 [DC Injection Current at Stop]*.
- If you set *b2-08* too high, DC Injection Braking at start can cause an audible noise. Adjust *b2-08* to decrease the volume to the permitted level.

◆ b4: Timer Function

The drive uses timers to delay activating and deactivating MFDO terminals.

Timers prevent sensors and switches from making chattering noise.

To enable this function, set *H1-xx = 18 [MFDI Function Selection = Timer Function]*, and set *H2-01 to H2-05 = 12 [MFDO Function Selection = Timer Output]*.

■ Timer Function Operation

Timers that Set a Delay for Timer Inputs and Timer Outputs

Triggers timer output if the timer input is active for longer than the time set in *b4-01 [Timer Function ON-Delay Time]*. Triggers timer output late for the time set in *b4-02 [Timer Function OFF-Delay Time]*. Figure 12.7 shows an example of how the timer function works.

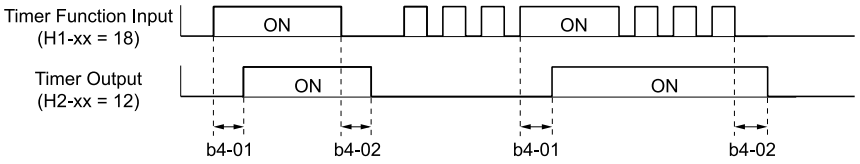

Figure 12.7 Example of Timer Function Operation

■ b4-01: Timer Function ON-Delay Time

No. (Hex.)	Name	Description	Default (Range)
b4-01 (01A3) Expert	Timer Function ON-Delay Time	V/f OLV CLV CLV/PM Sets the ON-delay time for the timer input.	0.0 s (0.0 - 3000.0 s)

■ b4-02: Timer Function OFF-Delay Time

No. (Hex.)	Name	Description	Default (Range)
b4-02 (01A4) Expert	Timer Function OFF-Delay Time	V/f OLV CLV CLV/PM Sets the OFF-delay time for the timer input.	0.0 s (0.0 - 3000.0 s)

◆ b6: Dwell Function

The Dwell function momentarily keeps the output speed at start and stop.

This prevents motor speed loss when you start and stop heavy loads. The Dwell function is also enabled when backlash on the machine side causes sudden movement at the start of acceleration and deceleration.

At the start of acceleration, the drive uses the output speed and acceleration time set for the Dwell function to automatically operate at low speed to decrease the effects of backlash. Then, the drive can accelerate again. The Dwell function operates the same for deceleration.

For conveyor applications, the Dwell function also lets the drive interlock the output speed and a delay time for the holding brake on the load side.

The Dwell function momentarily stops during acceleration to prevent a PM motor from stepping out. Figure 12.8 shows how the Dwell function works.

Note:

When you use the Dwell function at stop, set *b1-03 = 0 [Stopping Method Selection = Ramp to Stop]*.

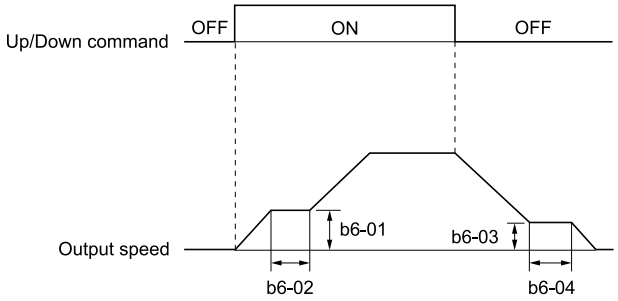

Figure 12.8 Time Chart for the Dwell Function at Start/Stop

■ b6-01: Dwell Speed Reference at Start

No. (Hex.)	Name	Description	Default (Range)
b6-01 (01B6) Expert	Dwell Speed Reference at Start	V/f OLV CLV CLV/PM Sets the output speed that the drive will momentarily hold when the motor starts.	0.0% (0.0 - 100.0%)

When the drive accelerates to the output speed set in *b6-01*, it keeps that speed for the time set in *b6-02 [Dwell Time at Start]*, and starts to accelerate again.

■ b6-02: Dwell Time at Start

No. (Hex.)	Name	Description	Default (Range)
b6-02 (01B7) Expert	Dwell Time at Start	V/f OLV CLV CLV/PM Sets the length of time that the drive will hold the output speed when the motor starts.	0.0 s (0.0 - 10.0 s)

■ b6-03: Dwell Speed Reference at Stop

No. (Hex.)	Name	Description	Default (Range)
b6-03 (01B8) Expert	Dwell Speed Reference at Stop	V/f OLV CLV CLV/PM Sets the output speed that the drive will momentarily hold when ramping to stop the motor.	0.0% (0.0 - 100.0%)

When the drive decelerates to the output speed set in *b6-03*, it keeps that speed for the time set in *b6-04 [Dwell Time at Stop]* and starts to decelerate again.

■ b6-04: Dwell Time at Stop

No. (Hex.)	Name	Description	Default (Range)
b6-04 (01B9) Expert	Dwell Time at Stop	V/f OLV CLV CLV/PM Sets the length of time for the drive to hold the output speed when ramping to stop the motor.	0.0 s (0.0 - 10.0 s)

◆ b7: Droop Control

Droop control automatically balances the load level between two motors that operate the same load.

Droop control decreases motor speed as the load changes. You must enable the Droop control function for each motor it is operating.

To decrease motor speed, the Droop control function decreases the speed reference when an increase in the load increases the torque reference. To increase motor speed, the Droop control function increases the speed reference when a decrease in the load decreases the torque reference. The Droop control function adjusts motor speed as the torque reference changes to balance the load between the motors.

Note:

When you use Droop control, set *n5-01 = 0 [Feed Forward Control Selection = Disabled]*.

■ b7-01: Droop Control Gain

No. (Hex.)	Name	Description	Default (Range)
b7-01 (01CA) RUN Expert	Droop Control Gain	V/f OLV CLV CLV/PM Sets the amount of deceleration when the torque reference is at 100% as a percentage of *E1-04 [Maximum Output Frequency]*.	0.0% (0.0 - 100.0%)

To disable Droop control, set this parameter to 0.0%.

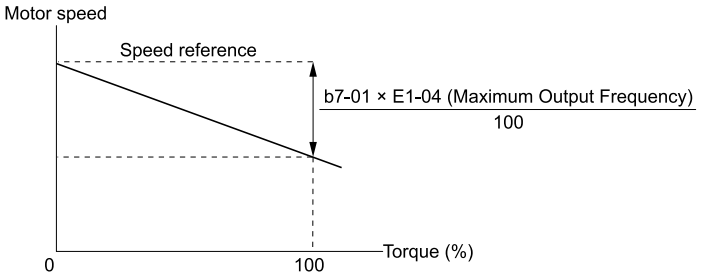

Figure 12.9 Droop Control Gain

■ b7-02: Droop Control Delay Time

No. (Hex.)	Name	Description	Default (Range)
b7-02 (01CB) RUN Expert	Droop Control Delay Time	V/f OLV CLV CLV/PM Sets the responsiveness of Droop control. Decrease this setting when drive response is slow. Increase this setting when hunting or oscillation occur.	0.05 s (0.03 - 2.00 s)

◆ b8: Energy Saving

Energy-saving control operates the motor at its most efficient level to improve overall system operating efficiency.

Set *b8-01 [Energy Saving Control Selection]*, *b8-16 [PM E-Save Coefficient Ki]*, and *b8-17 [PM E-Save Coefficient Kt]* when you use a PM motor.

Note:
- Energy-saving control is available only when *A1-02 = 7 [Control Method Selection = CLV/PM]* and *A1-01 = 3 [Access Level Selection = Expert Level]*.
- Energy-saving control maximizes operation based on precise motor data set to the drive. Always do Auto-Tuning and enter the correct information about the motor before you use Energy-saving control.

■ Standby Mode

The Standby Mode helps to decrease the power consumption of drive in standby condition (no operation longer than *b8-51 [Standby Mode Wait Time]*).

Standby Mode waits for the drive to stop, uses the relay output of an MFDO terminal to shut off the input side electromagnetic contactor (MC), then shuts off the main circuit power supply. This can limit the standby power consumption only to the drive control power supply including the option.

When you use this function, connect an electromagnetic contactor to the drive input side, and connect the MFDO terminal set for *H2-xx = 65 or 165 [Standby Output or !Standby Output]*. When the MFDO terminal activates, the electromagnetic contactor must be OFF.

Connect an external 24 V power supply directly to terminals PS-AC for the control power supply of the drive. When you use Standby Mode, make sure that you lock the mechanical brake on the motor shaft.

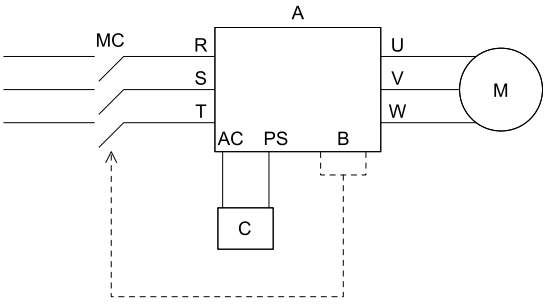

A - Drive
B - MFDO terminal
C - External 24 V power supply

Figure 12.10 Necessary Configuration for Direct Connection

- When you enter the Up and Down commands from MFDIs or when you use MFDIs to return the operation from the Standby Mode, use another 24 V power supply isolated from the 24 V power supply connected to between the terminals PS-AC.

- When you use the same 24 V power supply for $24V_1$ and $24V_2$, use a semiconductor switch (photocoupler) for inputs to terminals S1 to S10 to decrease the effect of electrical noise.

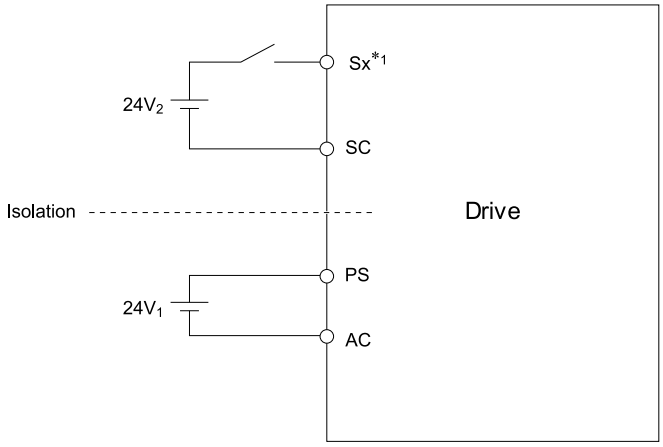

Figure 12.11 Circuit Configuration Example for Direct Connection

*1 The terminal Sx is one of the MFDI terminals S1 to S10.

Note:
- If the drive frequently moves between Standby Mode and Normal Mode, it can cause early wear on the electromagnetic contactor in the main circuit. The design life of the electromagnetic contactor in the drive main circuit is approximately 10 years when you turn it ON and OFF 48 times a day.
- If you frequently open and close the electromagnetic contactor, it will decrease the service life of the drive.

The drive does these operations in Standby Mode:

- To open or close the MFDO terminals set for *H2-xx = 65 or 165*
- To turn OFF the LCD backlight
- To turn OFF all LEDs of the LED Status Ring
- To stop the cooling fans

Conditions to Transit to Standby Mode

When one of these conditions is true, the drive enters Standby Mode, and the MFDO terminal set for *H2-xx ≠ 65 or 165 [Standby Output or !Standby Output]* activates:

- There is an MFDO terminal set for *H2-xx = 65 or 165*, and the MFDI terminal set for *H1-xx = BB or 1BB [Standby or !Standby]* activates
- There is an MFDO terminal set for *H2-xx = 65 or 165*, and the drive receives the external baseblock signal for longer than *b8-51 [Standby Mode Wait Time]* (including the time after the drive is energized to before the operation starts)

Conditions to Recover from Standby Mode

When one of these conditions is true, the drive recovers from Standby Mode, and the MFDO terminal set for *H2-xx = 65 or 165* deactivates to turn ON the electromagnetic contactor for the main circuit power supply:

- An external baseblock is canceled
- The MFDI terminal set for *H1-xx = BB or 1BB* deactivates
- The MFDI terminal set for *H1-xx = 40 or 41 [Up Command or Down Command]* activates
- The MFDI terminal set for *H1-xx = BC or 1BC [Wake Up or !Wake Up]* activates
- The drive receives the Up/Down command from the keypad, MEMOBUS/Modbus communications, or communication option

After the drive receives the request to recover to Normal Mode, it takes 3 s maximum to be ready for operation.

When the drive has already received the Up/Down command at the time that the ON signal of the electromagnetic contactor is input, it operates in the requested operation mode at the same time that the ON signal of the electromagnetic contactor is input.

■ b8-01: Energy Saving Control Selection

No. (Hex.)	Name	Description	Default (Range)
b8-01 (01CC) Expert	Energy Saving Control Selection	V/f OLV CLV CLV/PM Sets the Energy-saving control function.	0 (0, 1)

0 : Disabled
1 : Enabled

■ b8-16: PM E-Save Coefficient Ki

No. (Hex.)	Name	Description	Default (Range)
b8-16 (01F8) Expert	PM E-Save Coefficient Ki	V/f OLV CLV CLV/PM Sets torque linearity. This parameter uses the Ki value from the motor nameplate. Usually it is not necessary to change this setting.	0.10 (0.00 - 2.00)

■ b8-17: PM E-Save Coefficient Kt

No. (Hex.)	Name	Description	Default (Range)
b8-17 (01F9) Expert	PM E-Save Coefficient Kt	V/f OLV CLV CLV/PM Sets torque linearity. This parameter uses the Kt value from the motor nameplate. Usually it is not necessary to change this setting.	1.00 (0.00 - 2.00)

■ b8-51: Standby Mode Wait Time

No. (Hex.)	Name	Description	Default (Range)
b8-51 (0B01) Expert	Standby Mode Wait Time	V/f OLV CLV CLV/PM Sets the delay time before turning off the electromagnetic contactor after the drive stops.	290 s (10 - 6000 s)

Note:
- If the drive frequently moves between Standby Mode and Normal Mode, it can cause early wear on the electromagnetic contactor in the main circuit. The design life of the electromagnetic contactor in the drive main circuit is approximately 10 years when you turn it ON and OFF 48 times a day.
- If you open and close the electromagnetic contactor too much, it will decrease the service life of the drive.

Refer to*Standby Mode on page 531* for more information about Standby Mode.

12.4 C: Tuning

C parameters adjust drive operation, including:

- Acceleration Ramp
- Deceleration Ramp
- Slip Compensation
- Torque Compensation
- Carrier Frequency

◆ C1: Accel & Decel Ramp

You can set four different acceleration and deceleration ramp pairs in the drive. When you activate and deactivate *H1-xx = 7, 16, 1A [MFDI Function Selection = Accel/Decel Ramp Selection 1, Motor 2 Selection, Accel/Decel Ramp Selection 2]*, you can switch acceleration and deceleration ramp during run.

Acceleration ramp parameters always set the ramp to accelerate from 0 Hz to *E1-04 [Maximum Output Frequency]*. Deceleration ramp parameters always set the ramp to decelerate from *E1-04* to 0 Hz.

C1-01 [Acceleration Ramp 1] and *C1-02 [Deceleration Ramp 1]* are the default active accel/decel settings.

Parameter	Range
C1-01 [Acceleration Ramp 1]	0.00 to 600.00 s
C1-02 [Deceleration Ramp 1]	
C1-03 [Acceleration Ramp 2]	
C1-04 [Deceleration Ramp 2]	
C1-05 [Acceleration Ramp 3]	
C1-06 [Deceleration Ramp 3]	
C1-07 [Acceleration Ramp 4]	
C1-08 [Deceleration Ramp 4]	

Note:
- When *C1-10 = 1 [Accel/Decel Ramp Setting Units = 0.1 s (0.0 to 6000.0 s)]*, the setting range for acceleration and deceleration ramps is *0.0 s to 6000.0 s*.
- Parameter *o1-03 [Speed Display Unit Selection]* sets the units for *C1-01* to *C1-08*.

■ Use MFDIs to Switch Acceleration Ramps

Table 12.6 shows the different acceleration and deceleration ramps.

Table 12.6 Accel/Decel Ramps and Active Parameters

H1-xx = 7 [Accel/Decel Ramp Selection 1]	H1-xx = 1A [Accel/Decel Ramp Selection 2]	Active Parameter	
		Acceleration Ramp	Deceleration Ramp
OFF	OFF	C1-01 [Acceleration Ramp 1]	C1-02 [Deceleration Ramp 1]
ON	OFF	C1-03 [Acceleration Ramp 2]	C1-04 [Deceleration Ramp 2]
OFF	ON	C1-05 [Acceleration Ramp 3]	C1-06 [Deceleration Ramp 3]
ON	ON	C1-07 [Acceleration Ramp 4]	C1-08 [Deceleration Ramp 4]

Figure 12.12 shows an operation example to change acceleration and deceleration ramps. It is necessary to set *b1-03 = 0 [Stopping Method Selection = Ramp to Stop]* for this example.

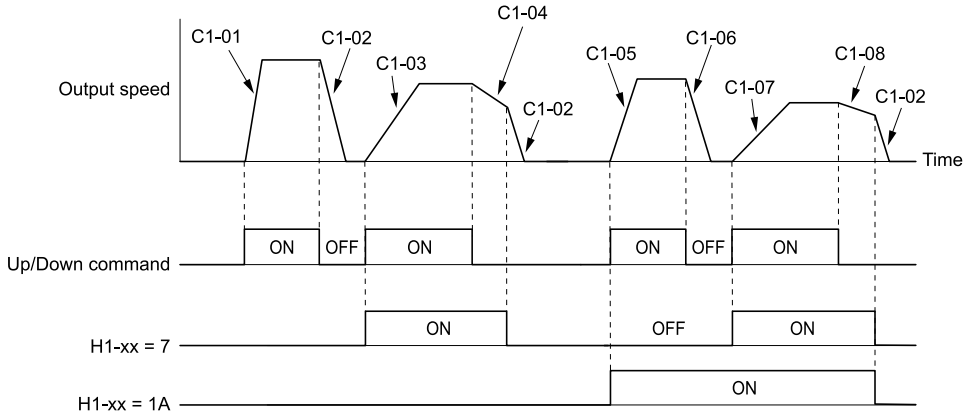

Figure 12.12 Timing Diagram of Acceleration and Deceleration Ramps

■ Use Motor Selection to Switch Acceleration and Deceleration Ramps

When you set *H1-xx = 16 [MFDI Function Selection = Motor 2 Selection]*, you can activate and deactivate the input terminal to switch between motor 1 and motor 2.

Note:

You cannot use the Motor 2 Selection function with PM motors.

Table 12.7 shows the possible acceleration and deceleration ramp combinations when you use the Motor 2 Selection function.

Table 12.7 Motor Selection and Acceleration and Deceleration Ramps

H1-xx = 7 [Accel/Decel Ramp Selection 1]	H1-xx = 16 [Motor 2 Selection]			
	Motor 2 Selection: OFF		Motor 2 Selection: ON	
	Acceleration Ramp	Deceleration Ramp	Acceleration Ramp	Deceleration Ramp
OFF	C1-01	C1-02	C1-05	C1-06
ON	C1-03	C1-04	C1-07	C1-08

■ Use Output Speed Level to Switch Acceleration and Deceleration Ramps

The drive can use output speed to automatically switch between different acceleration and deceleration ramps. When the output speed = *C1-11 [Accel/Decel Ramp Switchover Spd]*, the drive automatically switches the acceleration and deceleration ramps. Set *C1-11 = 0.0%* to disable this function.

Note:

- Acceleration and deceleration ramps set to MFDIs are more important than the automatic switch using the speed level set in *C1-11*. For example, if you set the switchover speed to *C1-11*, the drive will not automatically switch acceleration and deceleration ramp when the MFDI terminal set for *Accel/Decel Ramp Selection 1 [H1-xx = 7]* is activated.
- If *Motor 2 Selection [H1-xx = 16]* is activated, the drive will set the acceleration/deceleration ramp to *C1-05* and *C1-06* for motor 2 when the output speed is more than the speed level set in *C1-11*.
- The acceleration rate switch is disabled when *S3-21 [Dwell 2 End Speed] ≠ 0.00%*.

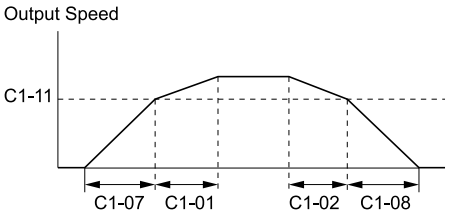

When the output speed ≥ C1-11, drive uses Accel/Decel Ramp 1 (C1-01, C1-02)
When the output speed < C1-11, drive uses Accel/Decel Ramp 4 (C1-07, C1-08)

Figure 12.13 Acceleration/Deceleration Ramps Switching Speed

■ C1-01: Acceleration Ramp 1

No. (Hex.)	Name	Description	Default (Range)
C1-01 (0200) RUN	Acceleration Ramp 1	V/f OLV CLV CLV/PM Sets the ramp to accelerate from zero to maximum output speed.	1.50 s (0.00 - 600.00 s)

Note:
- When *C1-10 = 1 [Accel/Decel Ramp Setting Units = 0.1 s (0.0 to 6000.0 s)]*, the setting range is 0.0 s to 6000.0 s.
- Parameter *o1-03 [Speed Display Unit Selection]* sets the units for this parameter.

■ C1-02: Deceleration Ramp 1

No. (Hex.)	Name	Description	Default (Range)
C1-02 (0201) RUN	Deceleration Ramp 1	V/f OLV CLV CLV/PM Sets the ramp to decelerate from maximum output speed to zero.	1.50 s (0.00 - 600.00 s)

Note:
- When *C1-10 = 1 [Accel/Decel Ramp Setting Units = 0.1 s (0.0 to 6000.0 s)]*, the setting range is 0.0 s to 6000.0 s.
- Parameter *o1-03 [Speed Display Unit Selection]* sets the units for this parameter.

■ C1-03: Acceleration Ramp 2

No. (Hex.)	Name	Description	Default (Range)
C1-03 (0202) RUN Expert	Acceleration Ramp 2	V/f OLV CLV CLV/PM Sets the ramp to accelerate from zero to maximum output speed.	1.50 s (0.00 - 600.00 s)

Note:
- When *C1-10 = 1 [Accel/Decel Ramp Setting Units = 0.1 s (0.0 to 6000.0 s)]*, the setting range is 0.0 s to 6000.0 s.
- Parameter *o1-03 [Speed Display Unit Selection]* sets the units for this parameter.

■ C1-04: Deceleration Ramp 2

No. (Hex.)	Name	Description	Default (Range)
C1-04 (0203) RUN Expert	Deceleration Ramp 2	V/f OLV CLV CLV/PM Sets the ramp to decelerate from maximum output speed to zero.	1.50 s (0.00 - 600.00 s)

Note:
- When *C1-10 = 1 [Accel/Decel Ramp Setting Units = 0.1 s (0.0 to 6000.0 s)]*, the setting range is 0.0 s to 6000.0 s.
- Parameter *o1-03 [Speed Display Unit Selection]* sets the units for this parameter.

■ C1-05: Acceleration Ramp 3

No. (Hex.)	Name	Description	Default (Range)
C1-05 (0204) RUN Expert	Acceleration Ramp 3	V/f OLV CLV CLV/PM Sets the ramp to accelerate from zero to maximum output speed.	1.50 s (0.00 - 600.00 s)

Note:
- When *C1-10 = 1 [Accel/Decel Ramp Setting Units = 0.1 s (0.0 to 6000.0 s)]*, the setting range is 0.0 s to 6000.0 s.
- Parameter *o1-03 [Speed Display Unit Selection]* sets the units for this parameter.

■ C1-06: Deceleration Ramp 3

No. (Hex.)	Name	Description	Default (Range)
C1-06 (0205) RUN Expert	Deceleration Ramp 3	V/f OLV CLV CLV/PM Sets the ramp to decelerate from maximum output speed to zero.	1.50 s (0.00 - 600.00 s)

Note:
- When *C1-10 = 1 [Accel/Decel Ramp Setting Units = 0.1 s (0.0 to 6000.0 s)]*, the setting range is 0.0 s to 6000.0 s.
- Parameter *o1-03 [Speed Display Unit Selection]* sets the units for this parameter.

■ C1-07: Acceleration Ramp 4

No. (Hex.)	Name	Description	Default (Range)
C1-07 (0206) RUN Expert	Acceleration Ramp 4	V/f OLV CLV CLV/PM Sets the ramp to accelerate from zero to maximum output speed.	1.50 s (0.00 - 600.00 s)

Note:
- When *C1-10 = 1 [Accel/Decel Ramp Setting Units = 0.1 s (0.0 to 6000.0 s)]*, the setting range is 0.0 s to 6000.0 s.
- Parameter *o1-03 [Speed Display Unit Selection]* sets the units for this parameter.

■ C1-08: Deceleration Ramp 4

No. (Hex.)	Name	Description	Default (Range)
C1-08 (0207) RUN Expert	Deceleration Ramp 4	V/f OLV CLV CLV/PM Sets the ramp to decelerate from maximum output speed to zero.	1.50 s (0.00 - 600.00 s)

Note:
- When *C1-10 = 1 [Accel/Decel Ramp Setting Units = 0.1 s (0.0 to 6000.0 s)]*, the setting range is 0.0 s to 6000.0 s.
- Parameter *o1-03 [Speed Display Unit Selection]* sets the units for this parameter.

■ C1-09: Emergency Stop Ramp

No. (Hex.)	Name	Description	Default (Range)
C1-09 (0208) Expert	Emergency Stop Ramp	V/f OLV CLV CLV/PM Sets the ramp that the drive will decelerate to zero for an Emergency Stop.	1.50 s (0.00 - 600.00 s)

⚠ WARNING Sudden Movement Hazard

Correctly set an Emergency Stop ramp to *C1-09 [Emergency Stop Ramp]* to make sure that the motor stops quickly and safely when you use the Emergency Stop function.
Rapid deceleration can trigger an overvoltage fault. If the drive detects an overvoltage fault, the drive output shuts off and the motor coasts. This uncontrolled motor state can cause serious injury or death.

Note:
- When *C1-10 = 1 [Accel/Decel Ramp Setting Units = 0.1 s (0.0 to 6000.0 s)]*, the setting range is 0.0 s to 6000.0 s.
- Parameter *o1-03 [Speed Display Unit Selection]* sets the units for this parameter.

These conditions trigger the Emergency Stop function:

- The drive receives an Emergency Stop command from an MFDI terminal.
- The drive detects a fault for which you set the stopping method as Emergency Stop.

Set *H1-xx = 15, 17 [MFDI Function Selection = Emergency Stop (N.O.), Emergency Stop (N.C.)]*.

When the drive receives the Emergency Stop command, the motor ramps to stop in the deceleration ramp set in *C1-09*. After the drive receives the Emergency Stop command, you cannot start drive operation again until deceleration is complete. You must wait until deceleration is complete before you can restart the drive after you initiate an Emergency Stop operation.

Note:

If you decelerate the drive too quickly, the drive will detect an *ov [Overvoltage]* fault, shut off the output, and the motor will coast to stop. To prevent motor coasting and stop the motor quickly and safely, make sure to set an Emergency Stop Ramp in *C1-09*.

■ C1-10: Accel/Decel Ramp Setting Units

No. (Hex.)	Name	Description	Default (Range)
C1-10 (0209) Expert	Accel/Decel Ramp Setting Units	V/f OLV CLV CLV/PM Sets the setting units for *C1-01 to C1-08 [Accel/Decel Ramps 1 to 4]*, *C1-09 [Emergency Stop Ramp]*, and *C1-15 [Inspection Deceleration Ramp]*.	0 (0, 1)

0 : 0.01 s (0.00 to 600.00 s)

Sets acceleration and deceleration ramps in 0.01 s units. The setting range for *C1-01 to C1-09* is 0.00 s to 600.00 s. The setting range for *C1-15* is 0.00 s to 2.00 s.

If one of *C1-01 to C1-09* is set to 1000.0 s or longer, you cannot set *C1-10 = 0*.

When one of those parameters is set to a value between 600.1 s and 1000.0 s, you can set *C1-10 = 0*, but the ramp will change to 600.00 s.

1 : 0.1 s (0.0 to 6000.0 s)

Sets acceleration and deceleration ramps in 0.1 s units. The setting range for *C1-01 to C1-09* is 0.0 s to 6000.0 s. The setting range for *C1-15* is 0.0 s to 20.0 s.

■ C1-11: Accel/Decel Ramp Switchover Spd

No. (Hex.)	Name	Description	Default (Range)
C1-11 (020A) Expert	Accel/Decel Ramp Switchover Spd	V/f OLV CLV CLV/PM Sets the speed at which the drive will automatically change acceleration and deceleration ramps.	0.0% (0.0 - 100.0%)

When the output speed is at the *C1-11* value, the drive automatically switches the acceleration and deceleration ramps. Set this parameter to *0.0* to disable this function.

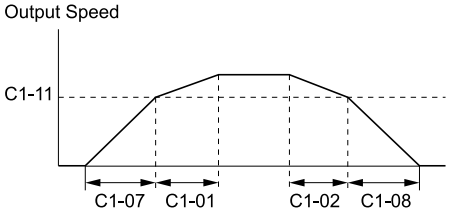

When the output speed ≥ C1-11, drive uses Accel/Decel Ramp 1 (C1-01, C1-02)
When the output speed < C1-11, drive uses Accel/Decel Ramp 4 (C1-07, C1-08)

Figure 12.14 Accel/Decel Ramp Switchover Spd

Table 12.8 lists the possible combinations of acceleration and deceleration ramp switchover speeds and the acceleration ramps for the Motor 2 Selection function.

Table 12.8 Motor and Acceleration and Deceleration Ramp Combination

C1-11	Motor 1		Motor 2	
	Acceleration Ramp	Deceleration Ramp	Acceleration Ramp	Deceleration Ramp
Less than the setting value	C1-07 [Acceleration Ramp 4]	C1-08 [Deceleration Ramp 4]	C1-07 [Acceleration Ramp 4]	C1-08 [Deceleration Ramp 4]
Equal to or more than the setting value	C1-01 [Acceleration Ramp 1]	C1-02 [Deceleration Ramp 1]	C1-05 [Acceleration Ramp 3]	C1-06 [Deceleration Ramp 3]

■ C1-12: Motor 2 Acceleration Ramp

No. (Hex.)	Name	Description	Default (Range)
C1-12 (0246) Expert	Motor 2 Acceleration Ramp	V/f OLV CLV CLV/PM Sets the ramp to accelerate from 0 to maximum speed when you use an MFDI terminal set for *H1-xx = 16 [MFDI Function Selection = Motor 2 Selection]* to select motor 2.	1.00 s (0.00 - 600.00 s)

Note:

If you do not set any MFDI terminals to *H1-xx = 16 or 116*, the keypad will not show this parameter.

■ C1-13: Motor 2 Deceleration Ramp

No. (Hex.)	Name	Description	Default (Range)
C1-13 (0247) Expert	Motor 2 Deceleration Ramp	V/f OLV CLV CLV/PM Sets the ramp to decelerate from maximum speed to 0 when you use an MFDI terminal set for *H1-xx = 16 [MFDI Function Selection = Motor 2 Selection]* to select motor 2.	1.00 s (0.00 - 600.00 s)

Note:

If you do not set any MFDI terminals to *H1-xx = 16 or 116*, the keypad will not show this parameter.

■ C1-15: Inspection Deceleration Ramp

No. (Hex.)	Name	Description	Default (Range)
C1-15 (0260)	Inspection Deceleration Ramp	V/f OLV CLV CLV/PM Sets the deceleration ramp during Inspection Operation.	0.00 s (0.00 - 2.00 s)

Note:

Parameter *o1-03 [Speed Display Unit Selection]* sets the units for this parameter. Refer to *Keypad Display Unit Selection on page 134* for more information about the display unit.

Refer to *Inspection Operation on page 174* for information about Inspection Operation.

◆ C2: Jerk Characteristics

C2 parameters set the jerk characteristics that set the transition between acceleration/deceleration rates. Adjust them to smooth out jerks or shocks that occur when you change the speed.

Figure 12.15 shows how the drive applies the jerk:

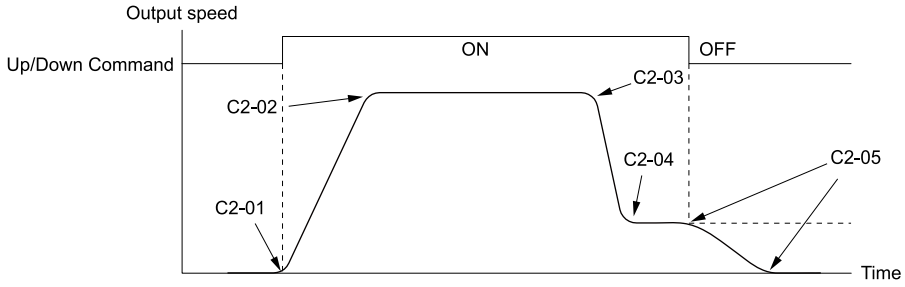

Figure 12.15 Jerk Settings

Note:

When *o1-03 = 0 to 4 [Speed Display Unit Selection = 0.01 Hz to Elevator Unit1 - m/s, s, s]*, the keypad shows the jerk settings in seconds. Use these formula to calculate the actual acceleration/deceleration ramp including jerk characteristics:

$$\text{Actual acceleration ramp} = \text{Acceleration ramp setting} + \frac{\text{C2-01} + \text{C2-02}}{2}$$

$$\text{Actual deceleration ramp} = \text{Deceleration ramp setting} + \frac{\text{C2-03} + \text{C2-04}}{2}$$

■ C2-01: Jerk @ Start of Accel

No. (Hex.)	Name	Description	Default (Range)
C2-01 (020B)	Jerk @ Start of Accel	V/f OLV CLV CLV/PM Sets the jerk at the start of acceleration.	0.50 s (0.00 - 10.00 s)

Note:

Parameter *o1-03 [Speed Display Unit Selection]* sets the units for this parameter. Refer to *Keypad Display Unit Selection on page 134* and *Defaults and Setting Ranges Changed by o1-03 [Speed Display Unit Selection] on page 513* for more information about the display unit.

■ C2-02: Jerk @ End of Accel

No. (Hex.)	Name	Description	Default (Range)
C2-02 (020C)	Jerk @ End of Accel	V/f OLV CLV CLV/PM Sets the jerk at the completion of acceleration.	0.50 s (0.00 - 10.00 s)

Note:

Parameter *o1-03 [Speed Display Unit Selection]* sets the units for this parameter. Refer to *Keypad Display Unit Selection on page 134* and *Defaults and Setting Ranges Changed by o1-03 [Speed Display Unit Selection] on page 513* for more information about the display unit.

■ C2-03: Jerk @ Start of Decel

No. (Hex.)	Name	Description	Default (Range)
C2-03 (020D)	Jerk @ Start of Decel	V/f OLV CLV CLV/PM Sets the jerk at the start of deceleration.	0.50 s (0.00 - 10.00 s)

Note:

Parameter *o1-03 [Speed Display Unit Selection]* sets the units for this parameter. Refer to *Keypad Display Unit Selection on page 134* and *Defaults and Setting Ranges Changed by o1-03 [Speed Display Unit Selection] on page 513* for more information about the display unit.

■ C2-04: Jerk @ End of Decel

No. (Hex.)	Name	Description	Default (Range)
C2-04 (020E)	Jerk @ End of Decel	V/f OLV CLV CLV/PM Sets the jerk at the completion of deceleration.	0.50 s (0.00 - 10.00 s)

Note:

Parameter *o1-03 [Speed Display Unit Selection]* sets the units for this parameter. Refer to *Keypad Display Unit Selection on page 134* and *Defaults and Setting Ranges Changed by o1-03 [Speed Display Unit Selection] on page 513* for more information about the display unit.

■ C2-05: Jerk below Leveling Speed

No. (Hex.)	Name	Description	Default (Range)
C2-05 (025F)	Jerk below Leveling Speed	V/f OLV CLV CLV/PM Sets the jerk when the speed reference is lower than the leveling speed setting.	0.50 s (0.00 - 10.00 s)

Note:

Parameter *o1-03 [Speed Display Unit Selection]* sets the units for this parameter. Refer to *Keypad Display Unit Selection on page 134* and *Defaults and Setting Ranges Changed by o1-03 [Speed Display Unit Selection] on page 513* for more information about the display unit.

◆ C3: Slip Compensation

The Slip Compensation function improves the speed accuracy of an induction motor. As loads on induction motors increase, motor slip increases and motor speed decreases. The drive adjusts the output speed in alignment with the motor load, compensates the slip, and makes the motor speed equal to the speed reference.

■ C3-01: Slip Compensation Gain

No. (Hex.)	Name	Description	Default (Range)
C3-01 (020F) RUN	Slip Compensation Gain	V/f OLV CLV CLV/PM Sets the gain for the slip compensation function. Usually it is not necessary to change this setting.	1.0 (0.0 - 2.5)

Note:

Correctly set these parameters before you change the slip compensation gain:

- *E2-01 [Motor Rated Current (FLA)]*
- *E2-02 [Motor Rated Slip]*
- *E2-03 [Motor No-Load Current]*

Adjust this parameter as follows if necessary:

- If the motor speed is slower than the speed reference, increase *C3-01* in 0.1-unit increments.
- If the motor speed is faster than the speed reference, decrease *C3-01* in 0.1-unit increments.

■ C3-02: Slip Compensation Delay Time

No. (Hex.)	Name	Description	Default (Range)
C3-02 (0210) RUN	Slip Compensation Delay Time	V/f OLV CLV CLV/PM Sets the slip compensation delay time when speed is unstable or when the slip compensation response is too slow. Usually it is not necessary to change this setting.	2000 ms (0 - 10000 ms)

Use these settings to adjust this parameter as necessary:

- When the speed is not stable, increase the setting.
- When the slip compensation response is too slow, decrease the setting.

■ C3-03: Slip Compensation Limit

No. (Hex.)	Name	Description	Default (Range)
C3-03 (0211) Expert	Slip Compensation Limit	V/f OLV CLV CLV/PM Sets the upper limit for the slip compensation function as a percentage of the motor rated slip.	200% (0 - 250%)

If you increase the value of *C3-01 [Slip Compensation Gain]* and the motor speed is slow, use this parameter. The drive uses this parameter when the slip is at the upper limit of slip compensation. Make sure that you measure the motor speed when you increase this parameter value. Set this parameter to make the speed reference and the slip compensation limit less than the permitted range of the machine.

The slip compensation limit is constant in the constant torque range (speed reference ≤ *E1-06 [Base Frequency]*). In the constant output range where the speed reference > *E1-06*, the slip compensation limit increases with the *C3-03* value and the output speed as shown in Figure 12.16.

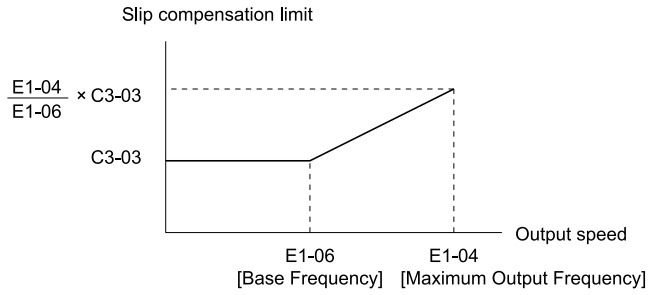

Figure 12.16 Slip Compensation Limit

■ C3-04: Slip Compensation at Regen

No. (Hex.)	Name	Description	Default (Range)
C3-04 (0212) Expert	Slip Compensation at Regen	V/f OLV CLV CLV/PM Sets the slip compensation function during regeneration.	0 (0 - 2)

If you apply a regenerative load when the slip compensation function during regeneration is active, the quantity of regeneration can increase immediately. In this condition, it is necessary to use a dynamic braking option (braking resistor or braking resistor unit).

0 : Disabled

The drive will not do Slip compensation during regeneration.

The load and operation status (regenerative operation) can cause the motor speed to be higher or lower than the frequency reference.

1 : Enabled Above 6Hz

Slip compensation function is enabled during regeneration. Slip compensation is disabled at output frequencies of 6 Hz or less.

2 : Enabled Above Defined Range

The drive uses *E2-02 [Motor Rated Slip]* to automatically calculate the frequency range where it will disable slip compensation function during regenerative operation.

Slip compensation is enabled at frequencies as low as 2 Hz.

■ C3-05: Output Voltage Limit Selection

No. (Hex.)	Name	Description	Default (Range)
C3-05 (0213) Expert	Output Voltage Limit Selection	V/f OLV CLV CLV/PM Sets the automatic reduction of motor magnetic flux when the output voltage is saturated.	1 (0, 1)

The drive will decrease flux and increase current to compensate torque when voltage is saturated. Make sure that the drive has enough output current capacity before you enable this parameter. When this parameter = *1 [Enabled]*, the output current will increase by 10% at a maximum (at rated load) before it is enabled.

Enable this parameter to increase speed precision when you move heavy loads at high speeds in these conditions:

- Power supply voltage is low
- Motor rated voltage is high

Do not enable this parameter in these conditions:

- Operating a motor in the middle speed range or low speed range
- Power supply voltage is a minimum of 10% more than the motor rated voltage

When you enable this parameter, if the power supply voltage is much less than the motor rated voltage, torque control will not be accurate.

0 : Disabled

1 : Enabled

◆ C4: Torque Compensation

Torque compensation is a function that increases voltage to increase output torque as compensation for insufficient torque production at start-up or low-speed operation.

Voltage drops due to motor winding resistance cause torque generating voltage to decrease, which causes insufficient torque. If the main circuit cable connecting the drive and motor is long, this can also cause insufficient torque due to voltage drops.

Note:

Set the motor parameters and V/f pattern correctly before you set *C4 parameters*.

■ C4-01: Torque Compensation Gain

No. (Hex.)	Name	Description	Default (Range)
C4-01 (0215) RUN	Torque Compensation Gain	V/f OLV CLV CLV/PM Sets the gain for the torque compensation function. Use this parameter value for motor 1 when operating multiple motors.	1.00 (0.00 - 2.50)

When *A1-02 = 0 [V/f Control]*, adjust the setting in these conditions:

Status	Adjustment
Torque is not sufficient during low-speed operation of 10 Hz or less.	Increase the setting in 0.05-unit increments.
There is vibration or hunting in the motor when operating the drive with a light load.	Decrease the setting in 0.05-unit decrements.
The cable between the drive and motor is too long.	Increase the setting in 0.05-unit increments.

Note:

- Adjust *C4-01* to make sure that the output current is not more than the continuous rated output current during low-speed operation.
- When *A1-02 = 2 [Open Loop Vector]*, usually it is not necessary to change this setting. If you change this parameter in that control method, it can decrease the torque precision.

■ C4-02: Torque Compensation Delay Time

No. (Hex.)	Name	Description	Default (Range)
C4-02 (0216) RUN Expert	Torque Compensation Delay Time	V/f OLV CLV CLV/PM Sets the torque compensation delay time. Usually it is not necessary to change this setting.	Determined by A1-02 (0 - 60000 ms)

Set this parameter in these conditions:

- If there is vibration in the motor, increase the setting.
- If the motor speed or motor torque response is too slow, decrease the setting.

■ C4-03: Torque Compensation @ Up Start

No. (Hex.)	Name	Description	Default (Range)
C4-03 (0217) Expert	Torque Compensation @ Up Start	V/f OLV CLV CLV/PM Sets the amount of torque reference for Up start as a percentage of the motor rated torque.	0.0% (0.0 - 200.0%)

The drive uses the time constant set in *C4-05 [Torque Compensation Time]* to do the torque compensation function.

This is available only when you use the Up command to start the motor. Set this parameter to 0.0 to disable this function.

■ C4-04: Torque Compensation @ Down Start

No. (Hex.)	Name	Description	Default (Range)
C4-04 (0218) Expert	Torque Compensation @ Down Start	V/f OLV CLV CLV/PM Sets the amount of torque reference for Down start as a percentage of the motor rated torque.	0.0% (-200.0 - 0.0%)

The drive uses the time constant set in *C4-05 [Torque Compensation Time]* to do the torque compensation function.

This is available only when you start the motor with the Down command. Set this parameter to 0.0 to disable this function.

■ C4-05: Torque Compensation Time

No. (Hex.)	Name	Description	Default (Range)
C4-05 (0219) Expert	Torque Compensation Time	V/f OLV CLV CLV/PM Sets the starting torque constant to use with *C4-03 [Torque Compensation @ Up Start] and C4-04 [Torque Compensation @ Down Start]*.	10 ms (0 - 200 ms)

◆ C5: Auto Speed Regulator (ASR)

The ASR adjusts the torque reference to decrease the difference between speed reference and motor speed when *A1-02 = 3 or 7 [Control Method Selection = CLV or CLV/PM]*.

Figure 12.17 is speed control block diagram.

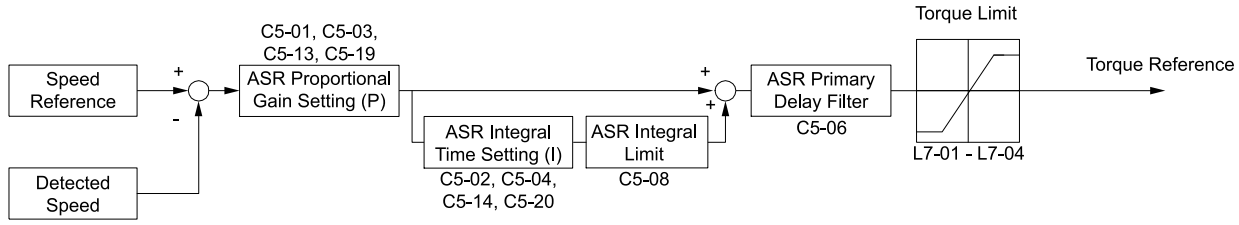

Figure 12.17 Speed Control Block Diagram

■ Before You Adjust ASR Parameters

- Do Auto-Tuning and set up all motor data correctly before you adjust the ASR parameters.
- Always make adjustments with the load connected to the motor.
- Use analog output signals to monitor *U1-16 [SFS Output Speed]* and *U1-05 [Speed Feedback]* when you adjust the ASR.

The drive provides three different gain and integral time settings for the speed loop. They are automatically switched over if the switching speed in *C5-07 [ASR Gain Switchover Speed]* is set larger than 0.0% (default: 0.0% for CLV, 2.0% for CLV/PM). If no switching speed is defined (*C5-07 = 0*) the drive will use one set of speed loop parameters only (*C5-01* and *C5-02*).

However, to get adequate performance in all sections of a trip, for most installations it will be necessary to use two or all three sets of speed loop settings.

Additional speed loop settings are provided for Position Lock. You can use them to prevent rollback especially in gearless applications.

■ ASR Adjustment Procedure

Do this procedure to adjust ASR parameters:

1. Examine *C5-07 [ASR Gain Switchover Speed]* and set a speed loop setting switching point.
   - When *A1-02 = 7 [Control Method Selection = CLV/PM]*, the drive is preset to 2.0%.
   - When *A1-02 = 3 [CLV]*, set *C5-07* between 8.0% to 10.0%.
2. Start a trip and check for any problems like rollback, vibration, overshoot, etc.
3. Adjust *C5-19 [ASR P Gain during Position Lock]* and *C5-20 [ASR I Time during Position Lock]* to solve rollback problems During Position Lock immediately before the motor starts to accelerate.
   If the motor rolls back immediately after the brake releases, increase *C5-19*, and decrease *C5-20*. Set them in the opposite way if vibration occurs.

   Note:
   If you cannot eliminate rollback by adjusting *C5-19* and *C5-20*, refer to *S3-02 [Position Lock Gain 2 at Start]*.
4. Adjust *C5-03 [ASR Proportional Gain 2]* and *C5-04 [ASR Integral Time 2]* to improve the performance at start after Position Lock finishes.
   If the speed response is slow, increase *C5-03*, and decrease *C5-04*. Set them in the opposite way if vibration occurs.
5. Adjust *C5-01 [ASR Proportional Gain 1]* and *C5-02 [ASR Integral Time 1]* to solve problems that occur at speeds higher than *C5-07*.
   If there is overshoot when reaching the top speed, increase *C5-01*, and decrease *C5-02*. Set them in the opposite way if vibration occurs.
6. Adjust *C5-13 [ASR Proportional Gain 3]* and *C5-14 [ASR Integral Time 3]* to improve the stopping behavior.
   If the landing accuracy is poor, increase *C5-13*, and decrease *C5-14*. Set them in the opposite way if vibration occurs.

   Note:
   - If you cannot resolve problems by setting *C5-13* and *C5-14*, refer to *S3-03 [Position Lock Gain at Stop]*.
   - When you use an analog input to set the speed reference, *C5-13* and *C5-14* settings will not be effective.
7. Repeat steps 2 to 6 until you get the desired riding comfort. Also refer to *Improve Ride Comfort on page 206*.

■ Speed Waveform Monitoring Method

To make small adjustments of ASR parameters, monitor the speed waveforms when you make the adjustments. Table 12.9 shows example settings of parameters to monitor speed waveforms.

Table 12.9 Example Settings of MFAO Terminals to Monitor Speed Waveforms

No.	Name	Setting Value	Description
H4-01	Terminal FM Analog Output Select	116	Lets you use terminal FM to monitor *U1-16 [SFS Output Speed]*.
H4-02	Terminal FM Analog Output Gain	100.0%	
H4-03	Terminal FM Analog Output Bias	0.0%	
H4-04	Terminal AM Analog Output Select	105	Lets you use terminal AM to monitor *U1-05 [Speed Feedback]*.
H4-05	Terminal AM Analog Output Gain	50.0%	
H4-06	Terminal AM Analog Output Bias	0.0%	
H4-07	Terminal FM Signal Level Select	1	Lets you monitor in a -10 V to +10 V range.
H4-08	Terminal AM Signal Level Select	1	

These settings cause this MFAO configuration. The MFAO common is terminal AC:

- Terminal FM: Outputs the output speed after SFS in a -10 V to +10 V (-100% to +100%) range.
- Terminal AM: Outputs the motor speed in a -10 V to +10 V (-200% to +200%) range.

Yaskawa recommends that you monitor the output speed after SFS and the motor speed for delays in response and differences in reference values.

■ Adjust ASR Parameters

Use Table 12.10 to adjust ASR. The table lists parameters for motor 1. You can make the same changes to motor 2 parameters when you run a second motor.

Note:
When adjusting the proportional gain and integral time, adjust the proportional gain first.

Table 12.10 ASR Response and Possible Solutions

Problem		Possible Solutions
Speed response is slow.	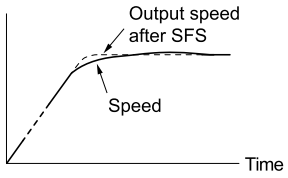	• Increase *C5-01/C5-03/C5-13 [ASR Proportional Gain]*. • Decrease *C5-02/C5-04/C5-14 [ASR Integral Time]*.
Overshoot or undershoot occurs at the end of acceleration or deceleration.	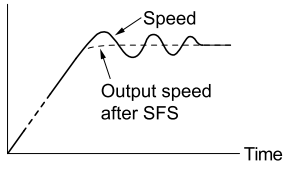	• Decrease *C5-01/C5-03/C5-13*. • Increase *C5-02/C5-04/C5-14*.
Vibration and oscillation occur at constant speed.	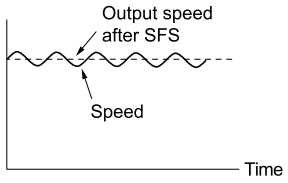	• Decrease *C5-01/C5-03/C5-13*. • Increase *C5-02/C5-04/C5-14*. • Increase *C5-06 [ASR Delay Time]*.
Oscillation at low speed and response is too slow at high speed. Oscillation at high speed and response is too slow at low speed.	-	When *A1-02 = 3 and 7 [Control Method Selection = CLV and CLV/PM]*, use *C5-01 to C5-04* to set the best ASR settings for high and low speed. Use *C5-07 [ASR Gain Switchover Speed]* to switch the ASR proportional gain and ASR integral time as specified by the output speed.

■ C5-01: ASR Proportional Gain 1

No. (Hex.)	Name	Description	Default (Range)
C5-01 (021B) RUN	ASR Proportional Gain 1	V/f OLV CLV CLV/PM Sets the gain to adjust ASR response at high speed.	Determined by A1-02 (0.00 - 300.00)

A higher gain provides a higher speed response. Usually, the gain increases with larger loads. Too much gain will cause vibration.

Note:
The drive usually sets Motor 1 ASR with *C5-01* and *C5-02 [ASR Integral Time 1]*. You can also use *C5-01* and *C5-02* as alternatives to *C5-03 [ASR Proportional Gain 2]* and *C5-04 [ASR Integral Time 2]*, respectively, when the speed is less than or equal to the speed set in *C5-07 [ASR Gain Switchover Speed]*.

■ C5-02: ASR Integral Time 1

No. (Hex.)	Name	Description	Default (Range)
C5-02 (021C) RUN	ASR Integral Time 1	V/f OLV CLV CLV/PM Sets the ASR integral time at high speed.	Determined by A1-02 (0.000 - 60.000 s)

When you increase the integral time, the responsiveness will decrease. An integral time that is too short can cause oscillation.

■ C5-03: ASR Proportional Gain 2

No. (Hex.)	Name	Description	Default (Range)
C5-03 (021D) RUN	ASR Proportional Gain 2	V/f OLV CLV CLV/PM Sets the gain to adjust ASR response at low speed.	Determined by A1-02 (0.00 - 300.00)

A higher gain provides a higher speed response. Usually, the gain increases with larger loads. Too much gain will cause vibration.

■ C5-04: ASR Integral Time 2

No. (Hex.)	Name	Description	Default (Range)
C5-04 (021E) RUN	ASR Integral Time 2	V/f OLV CLV CLV/PM Sets the ASR integral time at low speed.	Determined by A1-02 (0.000 - 60.000 s)

When you increase the integral time, the responsiveness will decrease. An integral time that is too short can cause oscillation.

■ C5-06: ASR Delay Time

No. (Hex.)	Name	Description	Default (Range)
C5-06 (0220)	ASR Delay Time	V/f OLV CLV CLV/PM Sets the filter time constant of the torque reference output from the speed loop. Usually it is not necessary to change this setting.	0.004 s (0.000 - 0.500 s)

If you have a load with low rigidity or if oscillation is a problem, decrease *C5-01* in 2-unit decrements or decrease *C5-06* in 0.001-unit decrements.

■ C5-07: ASR Gain Switchover Speed

No. (Hex.)	Name	Description	Default (Range)
C5-07 (0221)	ASR Gain Switchover Speed	V/f OLV CLV CLV/PM Sets the speed at which the drive will switch among these parameters: *C5-01 [ASR Proportional Gain 1]*, *C5-03 [ASR Proportional Gain 2]*, and *C5-13 [ASR Proportional Gain 3]* *C5-02 [ASR Integral Time 1]*, *C5-04 [ASR Integral Time 2]*, and *C5-14 [ASR Integral Time 3]*	Determined by A1-02 (0.0 - 100.0%)

Switching the proportional gain and integral time in the low or high speed range can help operation become stable. When *C5-07 > 0.0%*, the speed loop settings automatically change with the output speed as shown in Figure 12.18 and Figure 12.19.

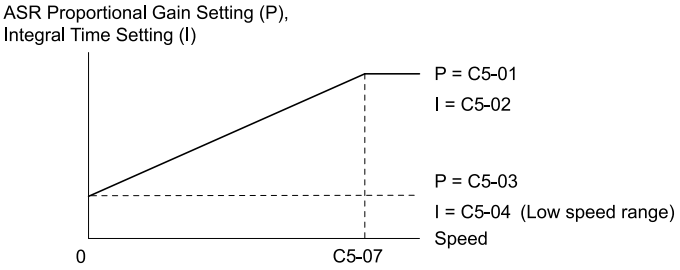

Figure 12.18 Low-speed/High-speed Gain Settings during Acceleration

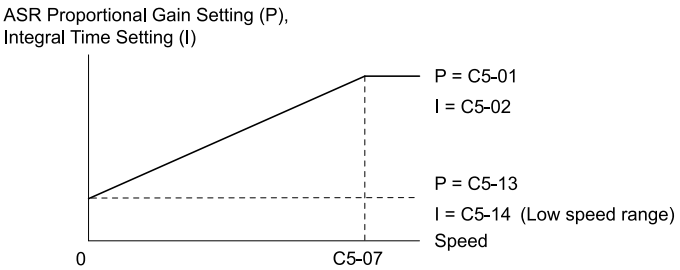

Figure 12.19 Low-speed/High-speed Gain Settings during Deceleration When Leveling Speed is Selected

■ C5-08: ASR Integral Limit

No. (Hex.)	Name	Description	Default (Range)
C5-08 (0222) Expert	ASR Integral Limit	V/f OLV CLV CLV/PM Sets the upper limit of the ASR integral amount as a percentage of the rated load.	400% (0 - 400%)

■ C5-13: ASR Proportional Gain 3

No. (Hex.)	Name	Description	Default (Range)
C5-13 (0272) RUN	ASR Proportional Gain 3	V/f OLV CLV CLV/PM Sets the gain to adjust ASR response at leveling speed. The setting is active for deceleration only.	Determined by A1-02 (0.00 - 300.00)

■ C5-14: ASR Integral Time 3

No. (Hex.)	Name	Description	Default (Range)
C5-14 (0273) RUN	ASR Integral Time 3	V/f OLV CLV CLV/PM Sets the ASR integral time at leveling speed. The setting is active for deceleration only.	Determined by A1-02 (0.000 - 10.000 s)

■ C5-16: ASR Filter Time during Pos. Lock

No. (Hex.)	Name	Description	Default (Range)
C5-16 (0271) Expert	ASR Filter Time during Pos. Lock	V/f OLV CLV CLV/PM Sets the filter time constant of the torque reference output from the speed loop during Position Lock. Usually it is not necessary to change this setting.	0.000 s (0.000 - 0.500 s)

If vibration is a problem, gradually increase this parameter in 0.01-unit increments.

■ C5-17: Motor Inertia

No. (Hex.)	Name	Description	Default (Range)
C5-17 (0276) Expert	Motor Inertia	V/f OLV CLV CLV/PM Sets the motor inertia.	Determined by A1-02 and o2-04 (0.0001 - 6.0000 kgm^2)

Note:

The display units for the default setting and setting range are different for different models:

- 0.0001 kgm^2 units (setting range: 0.0001 kgm^2 to 6.0000 kgm^2): 2022, 4012
- 0.001 kgm^2 units (setting range: 0.001 kgm^2 to 60.000 kgm^2): 2031 to 2225, 4019 to 4114
- 0.01 kgm^2 units (setting range: 0.01 kgm^2 to 600.00 kgm^2): 2269 to 2519, 4140 to 4380

■ C5-18: Load Inertia Ratio

No. (Hex.)	Name	Description	Default (Range)
C5-18 (0277) Expert	Load Inertia Ratio	V/f OLV CLV CLV/PM Sets the load inertia ratio for the motor inertia.	1.0 (0.0 - 6000.0)

■ C5-19: ASR P Gain during Position Lock

No. (Hex.)	Name	Description	Default (Range)
C5-19 (0274) RUN	ASR P Gain during Position Lock	V/f OLV CLV CLV/PM Sets the Speed Control Loop Proportional gain used during Position Lock.	Determined by A1-02 (0.00 - 300.00)

- If the motor rolls back immediately after the brake releases, increase this parameter, and decrease *C5-20 [ASR I Time during Position Lock]*.
- If vibrations occur, decrease this parameter, and increase *C5-20*.

■ C5-20: ASR I Time during Position Lock

No. (Hex.)	Name	Description	Default (Range)
C5-20 (0275) RUN	ASR I Time during Position Lock	V/f OLV CLV CLV/PM Sets the Speed Control Loop Integral time used during Position Lock.	0.100 s (0.000 - 10.000 s)

- If the motor rolls back immediately after the brake releases, increase *C5-19 [ASR P Gain during Position Lock]*, and decrease this parameter.
- If vibrations occur, decrease *C5-19*, and increase this parameter.

■ C5-29: Speed Control Response

No. (Hex.)	Name	Description	Default (Range)
C5-29 (0B18) Expert	Speed Control Response	V/f OLV CLV CLV/PM Sets the level of speed control responsiveness. Usually it is not necessary to change this setting.	1 (0, 1)

If a high level of speed control responsiveness is necessary, set *C5-29 = 1*, then adjust the speed control (ASR) parameter.

0 : Standard

1 : High Performance 1

■ C5-50: Notch Filter Frequency

No. (Hex.)	Name	Description	Default (Range)
C5-50 (0B14) Expert	Notch Filter Frequency	V/f OLV CLV CLV/PM Sets the machine resonance frequency.	0 Hz (0, 20 - 1000 Hz)

Machine resonance can cause high-frequency noise and vibration during operation. A notch filter can help prevent the noise and vibration. Notch filters set the resonant frequency of the machine to remove specific vibrational frequency components caused by machine resonance.

Note:
- Correctly set the value for the notch filter frequency. If the frequency value is too low for the speed loop response frequency, the speed control function will not function correctly. Set the frequency to be a minimum of 4 times the speed loop response frequency.
- Set *C5-50 = 0 [0 Hz]* to disable the notch filter.

■ C5-51: Notch Filter Bandwidth

No. (Hex.)	Name	Description	Default (Range)
C5-51 (0B15) Expert	Notch Filter Bandwidth	V/f OLV CLV CLV/PM Sets the notch width of the notch filter.	1.0 (0.5 - 5.0)

Note:

Set *C5-50 = 0 [Notch Filter Frequency = 0 Hz]* to disable the notch filter.

◆ C6: Carrier Frequency

C6 parameters set the carrier frequencies.

■ C6-03: Carrier Frequency

No. (Hex.)	Name	Description	Default (Range)
C6-03 (0225)	Carrier Frequency	V/f OLV CLV CLV/PM Sets the carrier frequency.	Determined by o2-04 (1.0 - 15.0 kHz)

Note:

When the drive does the learning operation at low speed, set the carrier frequency to ~2 kHz to prevent *oL2 [Drive Overload]* detection.

■ C6-06: PWM Modulation Method

No. (Hex.)	Name	Description	Default (Range)
C6-06 (0228) Expert	PWM Modulation Method	V/f OLV CLV CLV/PM Sets PWM modulation method.	0 (0, 2)

0 : 2/3 Phase Auto-Modulation

2 : 3-Phase Modulation

Note:

Setting 2 decreases the continuous rated output current of the drive. Contact Yaskawa or your nearest sales representative for more information.

■ C6-07: 2/3 Phase Switchover Level

No. (Hex.)	Name	Description	Default (Range)
C6-07 (0229) Expert	2/3 Phase Switchover Level	V/f OLV CLV CLV/PM Sets the carrier frequency to 2/3 of the set carrier level.	1.5 (0.5 - 3.0)

The switching level is a point where output voltage < on delay time / carrier period × 200 V × 1.5 × *C6-07*.

When *C6-07 = 0*, the modulation method of PWM at low speed is 3-phase modulation.

■ C6-09: Carrier Freq at Rotational Tune

No. (Hex.)	Name	Description	Default (Range)
C6-09 (022B) Expert	Carrier Freq at Rotational Tune	V/f OLV CLV CLV/PM Sets the Auto-Tuning carrier frequency. Usually it is not necessary to change this setting.	0 (0, 1)

If you set *C6-09 = 0* for a high-frequency or low-impedance motor, it can cause *oC [Overcurrent]*. To prevent *oC*, set the carrier frequency to a high value and set *C6-09 = 1* before you do Auto-Tuning.

0 : 5 kHz

Note:

When *A1-02 = 7 [Control Method Selection = CLV/PM]*, the carrier frequency is 2 kHz.

1 : Use C6-03

■ C6-21: Carrier Frequency @ Inspection

No. (Hex.)	Name	Description	Default (Range)
C6-21 (0245) Expert	Carrier Frequency @ Inspection	V/f OLV CLV CLV/PM Sets the carrier frequency during Inspection Operation.	1 (0, 1)

0 : Use the value set to C6-03

1 : 2 kHz

■ C6-23: Carrier Frequency @ Pole Search

No. (Hex.)	Name	Description	Default (Range)
C6-23 (025E) Expert	Carrier Frequency @ Pole Search	V/f OLV CLV CLV/PM Sets the carrier frequency when the drive estimates the initial polarity.	0 (0, 1)

Note:

When *C6-23 = 1*, the drive automatically changes the default setting for *n8-84 [Polarity Detection Current]* to 120%.

0 : 2 kHz

1 : Use the value set to C6-03

■ C6-34: Carrier Freq Reduce Start Level

No. (Hex.)	Name	Description	Default (Range)
C6-34 (116E) Expert	Carrier Freq Reduce Start Level	V/f OLV CLV CLV/PM Sets the integrated value of drive overload at which the drive starts to decrease the carrier frequency to the value set in *L8-39 [Reduced Carrier Frequency]*.	80% (5 - 90%)

12.5 d: References

d parameters [References] set the speed reference input method and dead band range. They also set field forcing functions.

⚠ WARNING Sudden Movement Hazard
Use fast stop circuits to safely and quickly stop the drive. After you wire the fast stop circuits, you must check their operation. Test the operation of the fast stop function before you use the drive.
If you do not test the fast stop circuit before you operate the drive, it can cause serious injury or death.

⚠ WARNING Crush Hazard
To use an elevator safely, you must install the external safety circuitry mentioned in this manual. If you do not use external safety circuitry, the drive can drop the load and cause death or serious injury.

◆ d1: Speed Reference

d1 parameters set the speed references. Switch the MFDI terminals to create a multi-step speed sequence using the various references set to the d1 parameters.

■ d1-01: Reference 1

No. (Hex.)	Name	Description	Default (Range)
d1-01 (0280) RUN	Reference 1	V/f OLV CLV CLV/PM Sets the speed reference in the units from *o1-03 [Speed Display Unit Selection]*.	0.00% (0.00 - 100.00%)

Note:
- To set *d1-01* to Multi-Step Speed 1, set *b1-01 = 0 [Speed Reference Selection 1 = Keypad]*.
- Parameter *o1-03 [Speed Display Unit Selection]* sets the units for this parameter. Refer to *Keypad Display Unit Selection on page 134* and *Defaults and Setting Ranges Changed by o1-03 [Speed Display Unit Selection] on page 513* for more information about the display unit.

■ d1-02: Reference 2

No. (Hex.)	Name	Description	Default (Range)
d1-02 (0281) RUN	Reference 2	V/f OLV CLV CLV/PM Sets the speed reference in the units from *o1-03 [Speed Display Unit Selection]*.	0.00% (0.00 - 100.00%)

Note:
- To set *d1-02* to Multi-Step Speed 2, set *H3-02, H3-06, and H3-10 ≠ 2 [MFAI Function Selection ≠ Auxiliary Speed Reference 1]*.
- Parameter *o1-03 [Speed Display Unit Selection]* sets the units for this parameter. Refer to *Keypad Display Unit Selection on page 134* and *Defaults and Setting Ranges Changed by o1-03 [Speed Display Unit Selection] on page 513* for more information about the display unit.

■ d1-03: Reference 3

No. (Hex.)	Name	Description	Default (Range)
d1-03 (0282) RUN	Reference 3	V/f OLV CLV CLV/PM Sets the speed reference in the units from *o1-03 [Speed Display Unit Selection]*.	0.00% (0.00 - 100.00%)

Note:
- To set *d1-03* to Multi-Step Speed 3, set *H3-02, H3-06, and H3-10 ≠ 3 [MFAI Function Selection ≠ Auxiliary Speed Reference 2]*.
- Parameter *o1-03 [Speed Display Unit Selection]* sets the units for this parameter. Refer to *Keypad Display Unit Selection on page 134* and *Defaults and Setting Ranges Changed by o1-03 [Speed Display Unit Selection] on page 513* for more information about the display unit.

■ d1-04: Reference 4

No. (Hex.)	Name	Description	Default (Range)
d1-04 (0283) RUN	Reference 4	V/f OLV CLV CLV/PM Sets the speed reference in the units from *o1-03 [Speed Display Unit Selection]*.	0.00% (0.00 - 100.00%)

Note:
- This parameter sets the speed reference of Multi-Step Speed 4.
- Parameter *o1-03 [Speed Display Unit Selection]* sets the units for this parameter. Refer to *Keypad Display Unit Selection on page 134* and *Defaults and Setting Ranges Changed by o1-03 [Speed Display Unit Selection] on page 513* for more information about the display unit.

■ d1-05: Reference 5

No. (Hex.)	Name	Description	Default (Range)
d1-05 (0284) RUN	Reference 5	V/f OLV CLV CLV/PM Sets the speed reference in the units from *o1-03 [Speed Display Unit Selection]*.	0.00% (0.00 - 100.00%)

Note:
- This parameter sets the speed reference of Multi-Step Speed 5.
- Parameter *o1-03 [Speed Display Unit Selection]* sets the units for this parameter. Refer to *Keypad Display Unit Selection on page 134* and *Defaults and Setting Ranges Changed by o1-03 [Speed Display Unit Selection] on page 513* for more information about the display unit.

■ d1-06: Reference 6

No. (Hex.)	Name	Description	Default (Range)
d1-06 (0285) RUN	Reference 6	V/f OLV CLV CLV/PM Sets the speed reference in the units from *o1-03 [Speed Display Unit Selection]*.	0.00% (0.00 - 100.00%)

Note:
- This parameter sets the speed reference of Multi-Step Speed 6.
- Parameter *o1-03 [Speed Display Unit Selection]* sets the units for this parameter. Refer to *Keypad Display Unit Selection on page 134* and *Defaults and Setting Ranges Changed by o1-03 [Speed Display Unit Selection] on page 513* for more information about the display unit.

■ d1-07: Reference 7

No. (Hex.)	Name	Description	Default (Range)
d1-07 (0286) RUN	Reference 7	V/f OLV CLV CLV/PM Sets the speed reference in the units from *o1-03 [Speed Display Unit Selection]*.	0.00% (0.00 - 100.00%)

Note:
- This parameter sets the speed reference of Multi-Step Speed 7.
- Parameter *o1-03 [Speed Display Unit Selection]* sets the units for this parameter. Refer to *Keypad Display Unit Selection on page 134* and *Defaults and Setting Ranges Changed by o1-03 [Speed Display Unit Selection] on page 513* for more information about the display unit.

■ d1-08: Reference 8

No. (Hex.)	Name	Description	Default (Range)
d1-08 (0287) RUN	Reference 8	V/f OLV CLV CLV/PM Sets the speed reference in the units from *o1-03 [Speed Display Unit Selection]*.	0.00% (0.00 - 100.00%)

Note:
- This parameter sets the speed reference of Multi-Step Speed 8.
- Parameter *o1-03 [Speed Display Unit Selection]* sets the units for this parameter. Refer to *Keypad Display Unit Selection on page 134* and *Defaults and Setting Ranges Changed by o1-03 [Speed Display Unit Selection] on page 513* for more information about the display unit.

■ d1-18: Speed Reference Selection Mode

No. (Hex.)	Name	Description	Default (Range)
d1-18 (02C0)	Speed Reference Selection Mode	V/f OLV CLV CLV/PM Sets the mode of speed reference selection by digital inputs.	0 (0 - 4)

⚠ WARNING Sudden Movement Hazard

Always turn OFF the Up/Down command before you change *b1-01 [Speed Reference Selection 1]*, *d1-18 [Speed Reference Selection Mode]*, or *H1-xx [MFDI Function Selection]*. If the Up/Down command is ON when you change these parameter settings, the motor can unexpectedly start to run and cause serious injury or death.

0 : Multi-speed Mode1 (d1-01 to 08)

You can use *d1-01 [Reference 1]* to *d1-08 [Reference 8]* to program up to eight separate preset speed references to the drive. You can use binary coded digital inputs to select them.

When you use this setting, the keypad does not show *d1-19* to *d1-23*.

1 : High speed has priority

You can use *d1-19 [Nominal Speed]*, *d1-20 [Intermediate Speed 1]* to *d1-23 [Intermediate Speed 3]*, and *d1-26 [Releveling Speed]* to program six different speeds to the drive. You can use dedicated digital inputs to select them.

Each of the speed references set in *d1-19* to *d1-23* takes priority over the speed reference set in *d1-26 [Leveling Speed]*.

2 : Leveling speed has priority

You can use *d1-19* to *d1-23*, and *d1-26* to program six different speeds to the drive. You can use dedicated digital inputs to select them.

The leveling speed reference set in *d1-26*, however, takes priority over all other speed references when enabled from one of the MFDI terminals set for *H1-xx = 53 [MFDI Function Selection = Leveling Speed]*.

When you use this setting, the keypad does not show *d1-01* to *d1-08*.

3 : Multi-speed Mode2 (d1-02 to 08)

You can use *d1-02* to *d1-08* to program seven separate preset speed references to the drive. You can use binary coded digital inputs to select them.

When you use this setting, the keypad does not show *d1-19* to *d1-23*.

4 : Smart Replacement

This function allows for easy replacement with Yaskawa drive. Contact Yaskawa or your nearest sales representative for more information.

When you use this setting, the drive automatically sets *H1-xx = 53* and *H1-xx = BA [Landing Zone]* to MFDI terminals S6 and S7 while it sets *H2-xx = 74 [MFDO Function Selection = Slow Down]* to the MFDO terminal M3-M4.

Refer to *Multi-Speed Inputs 1, 2 (d1-18 = 0 or 3) on page 170* and *Separate Speed Inputs (d1-18 = 1 or 2) on page 171* for more information about this function.

■ d1-19: Nominal Speed

No. (Hex.)	Name	Description	Default (Range)
d1-19 (02C1) RUN	Nominal Speed	V/f OLV CLV CLV/PM Sets the nominal speed reference when an MFDI terminal set for *H1-xx = 50 [MFDI Function Selection = Nominal Speed]* is active.	100.00% (0.00 - 100.00%)

Note:

Parameter *o1-03 [Speed Display Unit Selection]* sets the units for this parameter. Refer to *Keypad Display Unit Selection on page 134* and *Defaults and Setting Ranges Changed by o1-03 [Speed Display Unit Selection] on page 513* for more information about the display unit.

■ d1-20: Intermediate Speed 1

No. (Hex.)	Name	Description	Default (Range)
d1-20 (02C2) RUN	Intermediate Speed 1	V/f OLV CLV CLV/PM Sets the intermediate speed reference when an MFDI terminal set for *H1-xx = 51 [MFDI Function Selection = Intermediate Speed]* is active.	0.00% (0.00 - 100.00%)

Note:

Parameter *o1-03 [Speed Display Unit Selection]* sets the units for this parameter. Refer to *Keypad Display Unit Selection on page 134* and *Defaults and Setting Ranges Changed by o1-03 [Speed Display Unit Selection] on page 513* for more information about the display unit.

■ d1-21: Intermediate Speed 2

No. (Hex.)	Name	Description	Default (Range)
d1-21 (02C3) RUN	Intermediate Speed 2	V/f OLV CLV CLV/PM Sets the intermediate speed reference when MFDI terminals set for *H1-xx = 50, 51, and 52 [MFDI Function Selection = Nominal Speed, Intermediate Speed, and Releveling Speed]* are active.	0.00% (0.00 - 100.00%)

Note:

Parameter *o1-03 [Speed Display Unit Selection]* sets the units for this parameter. Refer to *Keypad Display Unit Selection on page 134* and *Defaults and Setting Ranges Changed by o1-03 [Speed Display Unit Selection] on page 513* for more information about the display unit.

■ d1-22: Intermediate Speed 3

No. (Hex.)	Name	Description	Default (Range)
d1-22 (02C4) RUN	Intermediate Speed 3	V/f OLV CLV CLV/PM Sets the intermediate speed reference when MFDI terminals set for *H1-xx = 51 and 52 [MFDI Function Selection = Intermediate Speed and Releveling Speed]* are active.	0.00% (0.00 - 100.00%)

Note:

Parameter *o1-03 [Speed Display Unit Selection]* sets the units for this parameter. Refer to *Keypad Display Unit Selection on page 134* and *Defaults and Setting Ranges Changed by o1-03 [Speed Display Unit Selection] on page 513* for more information about the display unit.

■ d1-23: Releveling Speed

No. (Hex.)	Name	Description	Default (Range)
d1-23 (02C5) RUN	Releveling Speed	V/f OLV CLV CLV/PM Sets the releveling speed reference when an MFDI terminal set for *H1-xx = 52 [MFDI Function Selection = Releveling Speed]* is active.	0.00% (0.00 - 100.00%)

Note:

Parameter *o1-03 [Speed Display Unit Selection]* sets the units for this parameter. Refer to *Keypad Display Unit Selection on page 134* and *Defaults and Setting Ranges Changed by o1-03 [Speed Display Unit Selection] on page 513* for more information about the display unit.

■ d1-24: Inspection Operation Speed

No. (Hex.)	Name	Description	Default (Range)
d1-24 (02C6) RUN	Inspection Operation Speed	V/f OLV CLV CLV/PM Sets the inspection operation speed when an MFDI terminal set for *H1-xx = 54 [MFDI Function Selection = Inspection Operation]* is active.	50.00% (0.00 - 100.00%)

Note:

Parameter *o1-03 [Speed Display Unit Selection]* sets the units for this parameter. Refer to *Keypad Display Unit Selection on page 134* and *Defaults and Setting Ranges Changed by o1-03 [Speed Display Unit Selection] on page 513* for more information about the display unit.

Refer to *Inspection Operation on page 174* for more information.

■ d1-25: Rescue Operation Speed

No. (Hex.)	Name	Description	Default (Range)
d1-25 (02C7) RUN	Rescue Operation Speed	V/f OLV CLV CLV/PM Sets the speed reference when an MFDI terminal set for *H1-xx = 55 [MFDI Function Selection = Rescue Operation]* is active.	10.00% (0.00 - 100.00%)

Note:

Parameter *o1-03 [Speed Display Unit Selection]* sets the units for this parameter. Refer to *Keypad Display Unit Selection on page 134* and *Defaults and Setting Ranges Changed by o1-03 [Speed Display Unit Selection] on page 513* for more information about the display unit.

Refer to *Rescue Operation on page 183* for more information.

■ d1-26: Leveling Speed

No. (Hex.)	Name	Description	Default (Range)
d1-26 (02C8) RUN	Leveling Speed	V/f OLV CLV CLV/PM Sets the speed reference when an MFDI terminal set for *H1-xx = 53 [MFDI Function Selection = Leveling Speed]* is active.	8.00% (0.00 - 100.00%)

Note:

Parameter *o1-03 [Speed Display Unit Selection]* sets the units for this parameter. Refer to *Keypad Display Unit Selection on page 134* and *Defaults and Setting Ranges Changed by o1-03 [Speed Display Unit Selection] on page 513* for more information about the display unit.

■ d1-27: Motor 2 Speed Reference

No. (Hex.)	Name	Description	Default (Range)
d1-27 (02C9) Expert	Motor 2 Speed Reference	V/f OLV CLV CLV/PM Sets the speed reference when you use an MFDI terminal set for *H1-xx = 16 [MFDI Function Selection = Motor 2 Selection]* to select motor 2.	0.00 Hz (0.00 - 200.00 Hz)

Note:

- The drive will control motor 1 when you set this parameter to *0.00 Hz*.
- When you use motor 2, also set acceleration/deceleration ramps in *C1-12 [Motor 2 Acceleration Ramp]* and *C1-13 [Motor 2 Deceleration Ramp]*.
- When you select motor 2, the keypad will show these monitor values in Hz:
  - *U1-01 [Speed Reference]*
  - *U1-02 [Output Speed]*
  - *U1-05 [Speed Feedback]*
  - *U1-16 [SFS Output Speed]*
  - *U4-19 [Modbus Spd Ref (dec)]*
  - *U4-20 [Option Spd Ref(dec)]*

Motor Switch Selection

When you input the signal set for *H1-xx = 16 [MFDI Function Selection = Motor 2 Selection]*, the drive can operate motor 2 in V/f Control. When *A1-02 = 2, 3, 7 [Control Method Selection = OLV, CLV, CLV/PM]*, the drive cannot operate motor 2.

You can also use *d1-27 [Motor 2 Speed Reference]* to operate motor 1 in V/f Control. Table 12.11 shows the relationship between *d1-27 [Motor 2 Speed Reference]* and motor switch.

Table 12.11 Switching Motor Control Function by Setting d1-27

Item	d1-27 Setting	
	0.00 Hz	Other than 0.00 Hz
Motor control	Controls motor 1 in V/f control *1	Controls motor 2 in V/f control
Speed reference	Speed reference set for motor 1	d1-27
Acceleration/deceleration ramps	C1-01 to C1-08	C1-12, C1-13
Jerk characteristics	C2-01 to C2-05	N/A
Contactor/Brake sequence	Enabled	Disabled
Applications	Hoist applications	Other than hoist applications

*1 Set the same values to the *E3 and E4 parameters* that are set for the *E1 and E2 parameters*.

Note:

These parameters are displayed only when *H1-xx = 16, 116*:

- *C1-12 [Motor 2 Acceleration Ramp]*
- *C1-13 [Motor 2 Deceleration Ramp]*
- *d1-27 [Motor 2 Speed Reference]*
- *E3 [V/f Pattern for Motor 2]*
- *E4 [Motor 2 Parameters]*

■ d1-28: Leveling Speed Detection Level

No. (Hex.)	Name	Description	Default (Range)
d1-28 (02CA)	Leveling Speed Detection Level	V/f OLV CLV CLV/PM Sets the speed reference level at which the drive detects leveling speed when *d1-18 = 0 or 3 [Speed Reference Selection Mode = Multi-speed Mode1 (d1-01 to 08) or Multi-speed Mode2 (d1-02 to 08)]*. If the selected speed reference is lower than this parameter, the drive uses the leveling speed as the speed reference.	0.00% (0.00 - 100.00%)

Note:

If you set a value larger than *d1-29 [Inspection Speed Detection Level]*, the drive detects *oPE03 [Multi-Function Input Setting Err]*.

■ d1-29: Inspection Speed Detection Level

No. (Hex.)	Name	Description	Default (Range)
d1-29 (02CB)	Inspection Speed Detection Level	V/f OLV CLV CLV/PM Sets the speed reference level at which the drive detects inspection speed when *d1-18 = 0 or 3 [Speed Reference Selection Mode = Multi-speed Mode1 (d1-01 to 08) or Multi-speed Mode2 (d1-02 to 08)]*. If the selected speed reference is between *d1-28 [Leveling Speed Detection Level]* and this parameter, the drive uses the inspection speed as the speed reference, and activates the inspection operation sequence.	0.00% (0.00 - 100.00%)

◆ d6: Field Forcing

d6 parameters set the Field Forcing function.

The Field Forcing function adjusts the delaying influence of the motor time constant when the drive changes the excitation current reference and increases motor responsiveness. This function uses a high motor excitation current reference for drive start-up only to help develop actual motor excitation current. Enable the Field Forcing function to increase motor responsiveness.

Note:

You cannot use Field Forcing during DC Injection Braking.

■ d6-03: Field Forcing Selection

No. (Hex.)	Name	Description	Default (Range)
d6-03 (02A2) Expert	Field Forcing Selection	V/f OLV CLV CLV/PM Sets the field forcing function.	0 (0, 1)

0 : Disabled

1 : Enabled

■ d6-06: Field Forcing Limit

No. (Hex.)	Name	Description	Default (Range)
d6-06 (02A5) Expert	Field Forcing Limit	V/f OLV CLV CLV/PM Sets the limit value for field forcing to increase the motor excitation current reference as a percentage of *E2-03 [Motor No-Load Current]*. Usually it is not necessary to change this setting.	400% (100 - 400%)

Note:

You cannot use Field Forcing during DC Injection Braking.

12.6 E: Motor Parameters

E parameters cover drive input voltage, V/f pattern, and motor parameters.

◆ E1: V/f Pattern for Motor 1

E1 parameters set the drive input voltage and motor V/f characteristics. To switch drive operation from one motor to another motor, set the V/f characteristics for motor 1.

■ V/f Pattern Settings

The drive uses a V/f pattern to adjust the output voltage relative to the frequency reference.

Use *E1-04 [Maximum Output Frequency]* to *E1-10 [Minimum Output Voltage]* to manually set the V/f pattern.

Note:

When you manually set V/f patterns, note these items:

- To set linear V/f characteristics at frequencies lower than *E1-06 [Base Frequency]*, set *E1-07 = E1-09 [Mid Point A Frequency = Minimum Output Frequency]*. In this application, the drive ignores *E1-08 [Mid Point A Voltage]*.
- Set the five frequencies as specified by these rules:
  E1-09 ≤ E1-07 < E1-06 ≤ E1-11 ≤ E1-04 [Minimum Output Frequency ≤ Mid Point A Frequency < Base Frequency ≤ Mid Point B Frequency ≤ Maximum Output Frequency]
  Incorrect settings will cause an *oPE10 [V/f Data Setting Error]*.
- Setting *E1-11 = 0 [Mid Point B Frequency = 0 Hz]* disables *E1-12 [Mid Point B Voltage]*. Ensure that the four frequencies are set according to the following rules;
  E1-09 ≤ E1-07 < E1-06 ≤ E1-04
- When you use *A1-03 [Initialize Parameters]* to initialize the drive, it will not reset *E1-03*.

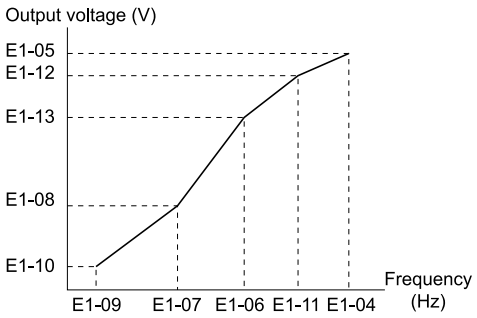

Figure 12.20 V/f Pattern

■ E1-01: Input AC Supply Voltage

No. (Hex.)	Name	Description	Default (Range)
E1-01 (0300)	Input AC Supply Voltage	V/f OLV CLV CLV/PM Sets the drive input voltage.	200 V Class: 200 V 400 V Class: 400 V (200 V Class: 155 - 255 V, 400 V Class: 310 - 510 V)

NOTICE **Damage to Equipment**

Set *E1-01 [Input AC Supply Voltage]* to align with the drive input voltage (not motor voltage). If this parameter is incorrect, the protective functions of the drive will not operate correctly and it can cause damage to the drive.

Values Related to the Drive Input Voltage

The value set in *E1-01* is the base value that the drive uses for the motor protective functions in Table 12.12. With a 400 V class drive, the detection level changes for some motor protective functions.

Table 12.12 Values Related to the Drive Input Voltage

Voltage	E1-01 Setting	Approximate Values		
		ov Detection Level	BTR Operation Level (rr Detection Level) *1	L2-05 [Undervoltage Detection Lvl (Uv1)]
200 V Class	All settings	410 V	394 V	190 V
400 V Class	Setting value ≥ 400 V	820 V	788 V	380 V
	Setting value < 400 V	820 V	788 V	350 V

*1 This is the protection function enabled in drives with built-in braking transistors. These values show the level that will trigger the built-in braking transistor. Refer to "YASKAWA AC Drive Series Option Braking Unit and Braking Resistor Unit Installation Manual (TOBPC72060001)" for more information.

■ E1-03: V/f Pattern Selection

No. (Hex.)	Name	Description	Default (Range)
E1-03 (0302)	V/f Pattern Selection	V/f OLV CLV CLV/PM Sets the V/f pattern for the drive and motor. You can make a custom pattern.	F (F)

Note:
- Set the correct V/f pattern for the application and operation area. An incorrect V/f pattern can decrease motor torque and increase current from overexcitation.
- Parameter *A1-03 [Initialize Parameters]* will not reset the value of *E1-03*.

F : Custom

Set *E1-04 to E1-13 [V/f Pattern for Motor 1]* to set the values for this custom pattern.

■ E1-04: Maximum Output Frequency

No. (Hex.)	Name	Description	Default (Range)
E1-04 (0303)	Maximum Output Frequency	V/f OLV CLV CLV/PM Sets the maximum output frequency for the V/f pattern.	Determined by A1-02 (Determined by A1-02)

Note:
Parameter *o1-04 [V/f Pattern Display Unit]* sets the units for this parameter.

■ E1-05: Maximum Output Voltage

No. (Hex.)	Name	Description	Default (Range)
E1-05 (0304)	Maximum Output Voltage	V/f OLV CLV CLV/PM Sets the maximum output voltage for the V/f pattern.	190.0 V (200 V Class: 0.0 - 255.0 V, 400 V Class: 0.0 - 510.0 V)

■ E1-06: Base Frequency

No. (Hex.)	Name	Description	Default (Range)
E1-06 (0305)	Base Frequency	V/f OLV CLV CLV/PM Sets the base frequency for the V/f pattern.	Determined by A1-02 (0.0 - 200.0 Hz)

Note:
Parameter *o1-04 [V/f Pattern Display Unit]* sets the units for this parameter.

■ E1-07: Mid Point A Frequency

No. (Hex.)	Name	Description	Default (Range)
E1-07 (0306)	Mid Point A Frequency	V/f OLV CLV CLV/PM Sets a middle output frequency for the V/f pattern.	Determined by A1-02 (0.0 - 200.0 Hz)

Note:
Parameter *o1-04 [V/f Pattern Display Unit]* sets the units for this parameter.

■ E1-08: Mid Point A Voltage

No. (Hex.)	Name	Description	Default (Range)
E1-08 (0307)	Mid Point A Voltage	V/f OLV CLV CLV/PM Sets a middle output voltage for the V/f pattern.	Determined by A1-02 and o2-04 (200 V Class: 0.0 - 255.0 V, 400 V Class: 0.0 - 510.0 V)

■ E1-09: Minimum Output Frequency

No. (Hex.)	Name	Description	Default (Range)
E1-09 (0308)	Minimum Output Frequency	V/f OLV CLV CLV/PM Sets the minimum output frequency for the V/f pattern.	Determined by A1-02 (0.0 - 200.0 Hz)

Note:
Parameter *o1-04 [V/f Pattern Display Unit]* sets the units for this parameter.

■ E1-10: Minimum Output Voltage

No. (Hex.)	Name	Description	Default (Range)
E1-10 (0309)	Minimum Output Voltage	V/f OLV CLV CLV/PM Sets the minimum output voltage for the V/f pattern.	Determined by A1-02 (200 V Class: 0.0 - 255.0 V, 400 V Class: 0.0 - 510.0 V)

■ E1-11: Mid Point B Frequency

No. (Hex.)	Name	Description	Default (Range)
E1-11 (030A) Expert	Mid Point B Frequency	V/f OLV CLV CLV/PM Sets a middle output frequency for the V/f pattern.	0.0 Hz (0.0 - 200.0 Hz)

Note:
- Set this parameter to *0.0* to disable the function.
- Parameter *o1-04 [V/f Pattern Display Unit]* sets the units for this parameter.

■ E1-12: Mid Point B Voltage

No. (Hex.)	Name	Description	Default (Range)
E1-12 (030B) Expert	Mid Point B Voltage	V/f OLV CLV CLV/PM Sets a middle point voltage for the V/f pattern.	0.0 V (200 V Class: 0.0 - 255.0 V, 400 V Class: 0.0 - 510.0 V)

Note:
Set this parameter to *0.0* to disable the function.

■ E1-13: Base Voltage

No. (Hex.)	Name	Description	Default (Range)
E1-13 (030C) Expert	Base Voltage	V/f OLV CLV CLV/PM Sets the base voltage for the V/f pattern.	0.0 V (200 V Class: 0.0 - 255.0 V, 400 V Class: 0.0 - 510.0 V)

Note:
- After Auto-Tuning, the value of *E1-13 = E1-05 [Maximum Output Voltage]*.
- When *E1-13 = 0.0*, use the value of *E1-05* to control the voltage.

◆ E2: Motor Parameters

E2 parameters [Motor Parameters] set induction motor data. To switch drive operation from one motor to another motor, configure the first motor (motor 1).

If you cannot do Auto-Tuning, set the *E2 parameters* manually. Auto-Tuning automatically sets the *E2 parameters* to the optimal values.

Note:
If *A1-02 = 7 [Control Method Selection = CLV/PM]*, the keypad does not show *E2-xx*.

■ E2-01: Motor Rated Current (FLA)

No. (Hex.)	Name	Description	Default (Range)
E2-01 (030E)	Motor Rated Current (FLA)	V/f OLV CLV CLV/PM Sets the motor rated current in amps.	Determined by o2-04 (10% to 200% of the continuous rated output current)

Note:
- If *E2-01 < E2-03 [Motor No-Load Current]*, the drive will detect *oPE02 [Parameter Range Setting Error]*.
- The display units are different for different models:
  - 0.01 A: models 2022 - 2041, 4012 - 4023
  - 0.1 A: models 2059 - 2519, 4030 - 4380

The value set for *E2-01* becomes the reference value for motor protection and the torque limit. Enter the motor rated current written on the motor nameplate. Auto-Tuning the drive will automatically set *E2-01* to the value input for "Motor Rated Current".

■ E2-02: Motor Rated Slip

No. (Hex.)	Name	Description	Default (Range)
E2-02 (030F)	Motor Rated Slip	V/f OLV CLV CLV/PM Sets motor rated slip.	Determined by o2-04 (0.000 - 20.000 Hz)

This parameter value becomes the base slip compensation value. The drive automatically sets this parameter during Auto-Tuning. When you cannot do Auto-Tuning, calculate the motor rated slip with the information on the motor nameplate and this formula:

E2-02 = f - (n × p) / 120

- f: Motor rated frequency (Hz)
- n: Rated motor speed (min^{-1} (r/min))
- p: Number of motor poles

■ E2-03: Motor No-Load Current

No. (Hex.)	Name	Description	Default (Range)
E2-03 (0310)	Motor No-Load Current	V/f OLV CLV CLV/PM Sets the no-load current for the motor in amps when operating at the rated frequency and the no-load voltage.	Determined by o2-04 (0.0 - E2-01)

Note:
The display units are different for different models:
- 0.01 A: 2022 - 2041, 4012 - 4023
- 0.1 A: 2059 - 2519, 4030 - 4380

The drive automatically sets this parameter during Auto-Tuning. When you cannot do Auto-Tuning, you can also use the motor no-load current on the motor test report to enter this value manually. Get the test report from the motor manufacturer.

Note:
The default setting of the no-load current is for a 4-pole motor recommended by Yaskawa.

■ E2-04: Motor Pole Count

No. (Hex.)	Name	Description	Default (Range)
E2-04 (0311)	Motor Pole Count	V/f OLV CLV CLV/PM Sets the number of motor poles.	4 (2 - 120)

Note:
- When *A1-02 = 0, 3 [Control Method Selection = V/f, CLV]*, the maximum value is 120.
- When *A1-02 = 2 [OLV]*, the maximum value is 48.

Auto-Tuning automatically sets this parameter to the value of [Number of Motor Poles].

■ E2-05: Motor Line-to-Line Resistance

No. (Hex.)	Name	Description	Default (Range)
E2-05 (0312)	Motor Line-to-Line Resistance	V/f OLV CLV CLV/PM Sets the line-to-line resistance for the motor stator windings.	Determined by o2-04 (0.000 - 65.000 Ω)

Note:
This value is the motor line-to-line resistance. Do not set this parameter with the resistance per phase.

Auto-Tuning automatically sets this parameter. If you cannot do Auto-Tuning, use the test report from the motor manufacturer to configure the settings. Use one of these formulas to calculate the motor line-to-line resistance:

- E-type insulation: [the resistance value (Ω) shown on the test report at 75 °C] × 0.822
- B-type insulation: [the resistance value (Ω) shown on the test report at 75 °C] × 0.822
- F-type insulation: [the resistance value (Ω) shown on the test report at 115 °C] × 0.728

■ E2-06: Motor Leakage Inductance

No. (Hex.)	Name	Description	Default (Range)
E2-06 (0313)	Motor Leakage Inductance	V/f OLV CLV CLV/PM Sets the voltage drop from motor leakage inductance when the motor is operating at the rated frequency and rated current. This value is a percentage of Motor Rated Voltage.	Determined by o2-04 (0.0 - 60.0%)

The drive automatically sets this parameter during Auto-Tuning.

Note:
The motor nameplate does not usually show the quantity of voltage drop. If you do not know the value of the motor leakage inductance, contact the motor manufacturer to receive a copy of the motor test report.

■ E2-07: Motor Saturation Coefficient 1

No. (Hex.)	Name	Description	Default (Range)
E2-07 (0314)	Motor Saturation Coefficient 1	V/f OLV CLV CLV/PM Sets the motor iron-core saturation coefficient at 50% of the magnetic flux.	0.50 (0.00 - 0.50)

Rotational Auto-Tuning automatically sets this parameter. The drive uses this coefficient when it operates the motor in the constant output range.

■ E2-08: Motor Saturation Coefficient 2

No. (Hex.)	Name	Description	Default (Range)
E2-08 (0315)	Motor Saturation Coefficient 2	V/f OLV CLV CLV/PM Sets the motor iron-core saturation coefficient at 75% of the magnetic flux.	0.75 (E2-07 - 0.75)

Rotational Auto-Tuning automatically sets this parameter. The drive uses this coefficient when it operates the motor in the constant output range.

■ E2-09: Motor Mechanical Loss

No. (Hex.)	Name	Description	Default (Range)
E2-09 (0316) Expert	Motor Mechanical Loss	V/f OLV CLV CLV/PM Sets the mechanical loss of the motor. This parameter is set as a percentage of *E2-11 [Motor Rated Power]*. Usually it is not necessary to change this setting.	0.0% (0.0 - 10.0%)

Adjust this parameter if there is a large quantity of torque loss from motor bearing friction. The drive adds the configured mechanical loss to the torque reference value as a torque compensation value:

■ E2-10: Motor Iron Loss

No. (Hex.)	Name	Description	Default (Range)
E2-10 (0317)	Motor Iron Loss	V/f OLV CLV CLV/PM Sets the motor iron loss.	Determined by o2-04 (0 - 65535 W)

■ E2-11: Motor Rated Power

No. (Hex.)	Name	Description	Default (Range)
E2-11 (0318)	Motor Rated Power	V/f OLV CLV CLV/PM Sets the motor rated output in the units from *o1-58 [Motor Power Unit Selection]*.	Determined by o2-04 (0.00 - 650.00 kW)

The drive automatically sets this parameter to the value input for "Motor Rated Power" during Auto-Tuning.

◆ E3: V/f Pattern for Motor 2

E3 parameters [V/f Pattern for Motor 2] set the control mode and V/f pattern used for motor 2.

Use *E3-04 [Motor 2 Maximum Output Frequency]* to *E3-10 [Motor 2 Minimum Output Voltage]* to manually set the V/f pattern.

Note:

- *E3-xx* and *E4-xx* are available when *H1-xx = 16 [MFDI Function Selection = Motor 2 Selection]*.
- If *A1-02 = 7 [Control Method Selection = CLV/PM]*, the keypad does not show *E3-xx*.

■ Notes on Manually Setting V/f Patterns

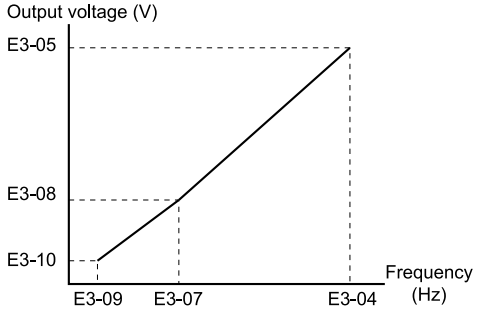

Figure 12.21 Motor 2 V/f Pattern Diagram

- To configure a linear V/f pattern at frequencies lower than *E3-06 [Motor 2 Base Frequency]*, set *E3-07 = E3-09 [Motor 2 Mid Point A Frequency = Motor 2 Minimum Output Frequency]*. In this application, the drive ignores *E1-08 [Mid Point A Voltage]*.
- Set the four frequencies as specified by these rules:
  E3-09 ≤ E3-07 < E3-06 ≤ E3-04 [Motor 2 Minimum Output Frequency ≤ Motor 2 Mid Point A Frequency < Motor 2 Base Frequency ≤ Motor 2 Maximum Output Frequency]
  Incorrect settings will trigger an *oPE10 [V/f Data Setting Error]*.
- When you use *A1-03 [Initialize Parameters]* to initialize the drive, the drive will reset the manually set values for *E3-04 to E3-10* to default values.

■ E3-04: Motor 2 Maximum Output Frequency

No. (Hex.)	Name	Description	Default (Range)
E3-04 (031A) Expert	Motor 2 Maximum Output Frequency	V/f OLV CLV CLV/PM Set the maximum output frequency for the motor 2 V/f pattern.	50.0 Hz (10.0 - 200.0 Hz)

Note:

Parameter *o1-04 [V/f Pattern Display Unit]* sets the units for this parameter.

■ E3-05: Motor 2 Maximum Output Voltage

No. (Hex.)	Name	Description	Default (Range)
E3-05 (031B) Expert	Motor 2 Maximum Output Voltage	V/f OLV CLV CLV/PM Sets the maximum output voltage for the motor 2 V/f pattern.	190.0 V (200 V Class: 0.0 - 255.0 V, 400 V Class: 0.0 - 510.0 V)

■ E3-06: Motor 2 Base Frequency

No. (Hex.)	Name	Description	Default (Range)
E3-06 (031C) Expert	Motor 2 Base Frequency	V/f OLV CLV CLV/PM Sets the base frequency for the motor 2 V/f pattern.	50.0 Hz (0.0 - E3-04)

Note:
Parameter *o1-04 [V/f Pattern Display Unit]* sets the units for this parameter.

■ E3-07: Motor 2 Mid Point A Frequency

No. (Hex.)	Name	Description	Default (Range)
E3-07 (031D) Expert	Motor 2 Mid Point A Frequency	V/f OLV CLV CLV/PM Sets a middle output frequency for the motor 2 V/f pattern.	2.5 Hz (0.0 - 200.0 Hz)

Note:
Parameter *o1-04 [V/f Pattern Display Unit]* sets the units for this parameter.

■ E3-08: Motor 2 Mid Point A Voltage

No. (Hex.)	Name	Description	Default (Range)
E3-08 (031E) Expert	Motor 2 Mid Point A Voltage	V/f OLV CLV CLV/PM Sets a middle output voltage for the motor 2 V/f pattern.	14.0 V (200 V Class: 0.0 - 255.0 V, 400 V Class: 0.0 - 510.0 V)

■ E3-09: Motor 2 Minimum Output Frequency

No. (Hex.)	Name	Description	Default (Range)
E3-09 (031F) Expert	Motor 2 Minimum Output Frequency	V/f OLV CLV CLV/PM Sets the minimum output frequency for the motor 2 V/f pattern.	1.3 Hz (0.0 - 200.0 Hz)

Note:
Parameter *o1-04 [V/f Pattern Display Unit]* sets the units for this parameter.

■ E3-10: Motor 2 Minimum Output Voltage

No. (Hex.)	Name	Description	Default (Range)
E3-10 (0320)	Motor 2 Minimum Output Voltage	V/f OLV CLV CLV/PM Sets the minimum output voltage for the motor 2 V/f pattern.	7.0 V (200 V Class: 0.0 - 255.0 V, 400 V Class: 0.0 - 510.0 V)

◆ E4: Motor 2 Parameters

E4 parameters [Motor 2 Parameters] set induction motor data. To switch drive operation from one motor to a different motor, configure motor 2.

Auto-Tuning automatically sets the *E4 parameters* to the best values for the application. If you cannot do Auto-Tuning, set the *E4 parameters* manually.

Note:
- *E3-xx* and *E4-xx* are available when *H1-xx = 16 [MFDI Function Selection = Motor 2 Selection]*.
- If *A1-02 = 7 [Control Method Selection = CLV/PM]*, the keypad does not show *E4-xx*.

■ E4-01: Motor 2 Rated Current

No. (Hex.)	Name	Description	Default (Range)
E4-01 (0321) Expert	Motor 2 Rated Current	V/f OLV CLV CLV/PM Sets the motor rated current for motor 2 in amps.	Determined by o2-04 (10% to 200% of the continuous rated output current)

Note:
- If *E4-01 ≤ E4-03 [Motor 2 Rated No-Load Current]*, the drive will detect *oPE02 [Parameter Range Setting Error]*.
- The display units are different for different models:
  - 0.01 A: 2022 - 2041, 4012 - 4023
  - 0.1 A: 2059 - 2519, 4030 - 4380

The value set for *E4-01* becomes the reference value for motor protection and the torque limit. Enter the motor rated current written on the motor nameplate. Auto-Tuning automatically sets the value of *E4-01* to the value input for [Motor Rated Current].

■ E4-02: Motor 2 Rated Slip

No. (Hex.)	Name	Description	Default (Range)
E4-02 (0322) Expert	Motor 2 Rated Slip	V/f OLV CLV CLV/PM Sets the motor rated slip for motor 2.	Determined by o2-04 (0.000 - 20.000 Hz)

The value set in *E4-02* becomes the base slip compensation value. The drive sets this parameter during Rotational Auto-Tuning and Stationary Auto-Tuning. If you cannot do Auto-Tuning, use the information written on the motor nameplate and this formula to calculate the motor rated slip:

E4-02 = f - (n × p) / 120

- f: Motor rated frequency (Hz)
- n: Rated motor speed (min^{-1} (r/min))
- p: Number of motor poles

■ E4-03: Motor 2 Rated No-Load Current

No. (Hex.)	Name	Description	Default (Range)
E4-03 (0323) Expert	Motor 2 Rated No-Load Current	V/f OLV CLV CLV/PM Sets the no-load current for motor 2 in amps when operating at the rated frequency and the no-load voltage.	Determined by o2-04 (0.0 - E4-01)

Note:

The display units are different for different models:
- 0.01 A: 2022 - 2041, 4012 - 4023
- 0.1 A: 2059 - 2519, 4030 - 4380

You can also manually enter the motor no-load current shown on the motor test report to *E4-03*. Contact the motor manufacturer for the motor test report.

Note:

The default setting of the no-load current is for a 4-pole motor recommended by Yaskawa.

■ E4-04: Motor 2 Motor Poles

No. (Hex.)	Name	Description	Default (Range)
E4-04 (0324) Expert	Motor 2 Motor Poles	V/f OLV CLV CLV/PM Sets the number of poles for motor 2.	4 (2 - 120)

Auto-Tuning automatically sets *E4-04* to the value input for [Number of Motor Poles].

■ E4-05: Motor 2 Line-to-Line Resistance

No. (Hex.)	Name	Description	Default (Range)
E4-05 (0325) Expert	Motor 2 Line-to-Line Resistance	V/f OLV CLV CLV/PM Sets the line-to-line resistance for the motor 2 stator windings.	Determined by o2-04 (0.000 - 65.000 Ω)

Note:

This value is the line-to-line resistance for motor 2. Do not set this parameter with the resistance per phase.

Auto-Tuning automatically sets this parameter. If you cannot do Auto-Tuning, use the test report from the motor manufacturer to configure the settings. Use one of these formulas to calculate the motor line-to-line resistance:

- E-type insulation: [the resistance value (Ω) shown on the test report at 75 °C] × 0.822
- B-type insulation: [the resistance value (Ω) shown on the test report at 75 °C] × 0.822
- F-type insulation: [the resistance value (Ω) shown on the test report at 115 °C] × 0.728

■ E4-06: Motor 2 Leakage Inductance

No. (Hex.)	Name	Description	Default (Range)
E4-06 (0326) Expert	Motor 2 Leakage Inductance	V/f OLV CLV CLV/PM Sets the voltage drop from motor 2 leakage inductance as a percentage of Motor Rated Voltage when motor 2 operates at the rated frequency and rated current.	Determined by o2-04 (0.0 - 60.0%)

The drive sets this parameter during Rotational Auto-Tuning and Stationary Auto-Tuning.

Note:

You cannot usually find the quantity of voltage drop on the motor nameplate. If you do not know the value of the motor 2 leakage inductance, get the test report from the motor manufacturer.

◆ E5: PM Motor Settings

E5 parameters are used to set PM motor data.

Perform Auto-Tuning for all other PM motors. If information from motor nameplates or test reports is available, the *E5 parameters* can be manually entered.

Note:

- The keypad displays *E5-xx* only when *A1-02 = 7 [Control Method Selection = CLV/PM]*.
- When you use *A1-03 [Initialize Parameters]* to initialize the drive, it will not reset *E5-xx parameters*.

■ E5-02: PM Motor Rated Power

No. (Hex.)	Name	Description	Default (Range)
E5-02 (032A)	PM Motor Rated Power	V/f OLV CLV CLV/PM Sets the PM motor rated output in the units set in *o1-58 [Motor Power Unit Selection]*.	Determined by o2-04 (0.10 - 650.00 kW)

These Auto-Tuning methods will automatically set this parameter:

- PM Motor Parameter Settings
- PM Stationary Auto-Tuning
- PM Rotational Auto-Tuning

■ E5-03: PM Motor Rated Current (FLA)

No. (Hex.)	Name	Description	Default (Range)
E5-03 (032B)	PM Motor Rated Current (FLA)	V/f OLV CLV CLV/PM Sets the PM motor rated current (FLA).	Determined by o2-04 (10% to 200% of the continuous rated output current)

Note:

The display units are different for different models:

- 0.01 A: models 2022 - 2041, 4012 - 4023
- 0.1 A: models 2059 - 2519, 4030 - 4380

The drive automatically sets *E5-03* to the value input for "PM Motor Rated Current" after you do these types of Auto-Tuning:

- PM Motor Parameter Settings
- PM Stationary Auto-Tuning
- PM Rotational Auto-Tuning

■ E5-04: PM Motor Pole Count

No. (Hex.)	Name	Description	Default (Range)
E5-04 (032C)	PM Motor Pole Count	V/f OLV CLV CLV/PM Sets the number of PM motor poles.	12 (2 - 120)

Note:
When you connect a PG-E3 option, the maximum value for this parameter is 48.

These types of Auto-Tuning will automatically set this parameter to the value of [Number of Motor Poles]:

- PM Motor Parameter Settings
- PM Stationary Auto-Tuning
- PM Rotational Auto-Tuning

■ E5-05: PM Motor Resistance (ohms/phase)

No. (Hex.)	Name	Description	Default (Range)
E5-05 (032D)	PM Motor Resistance (ohms/phase)	V/f OLV CLV **CLV/PM** Sets the resistance per phase of a PM motor. Set 50% of the line-to-line resistance.	Determined by o2-04 (0.000 - 65.000 Ω)

PM motor Auto-Tuning automatically sets this parameter to the value of [PM Motor Stator Resistance].

Note:
Do not change the setting calculated by Auto-Tuning unless it is necessary.

■ E5-06: PM d-axis Inductance (mH/phase)

No. (Hex.)	Name	Description	Default (Range)
E5-06 (032E)	PM d-axis Inductance (mH/phase)	V/f OLV CLV **CLV/PM** Sets the PM motor d-axis inductance.	Determined by o2-04 (0.00 - 600.00 mH)

PM motor Auto-Tuning automatically sets this parameter to the value of [PM Motor d-Axis Inductance].

Note:
Do not change the setting calculated by Auto-Tuning unless it is necessary.

■ E5-07: PM q-axis Inductance (mH/phase)

No. (Hex.)	Name	Description	Default (Range)
E5-07 (032F)	PM q-axis Inductance (mH/phase)	V/f OLV CLV **CLV/PM** Sets the PM motor q-axis inductance.	Determined by o2-04 (0.00 - 600.00 mH)

PM motor Auto-Tuning automatically sets this parameter to the value of [PM Motor q-Axis Inductance].

Note:
Do not change the setting calculated by Auto-Tuning unless it is necessary.

■ E5-09: PM Back-EMF Vpeak (mV/(rad/s))

No. (Hex.)	Name	Description	Default (Range)
E5-09 (0331)	PM Back-EMF Vpeak (mV/(rad/s))	V/f OLV CLV **CLV/PM** Sets the peak value of PM motor induced voltage.	Determined by o2-04 (0.0 - 6500.0 mV/(rad/s))

Set this parameter when you use an IPM motor with derated torque or an IPM motor with constant torque.
PM motor Auto-Tuning automatically sets this parameter to the value of [Back-EMF Voltage Constant (Ke)].
Set only *E5-09* or *E5-24 [PM Back-EMF L-L Vrms (mV/rpm)]* as the induced voltage constant.

Note:
When you set this parameter, also set *E5-24 = 0.0*. The drive will detect *oPE08 [Parameter Selection Error]* in these conditions:
- *E5-09 = 0.0* and *E5-24 = 0.0*
- *E5-09 ≠ 0.0* and *E5-24 ≠ 0.0*

■ E5-11: Encoder Z-Pulse Offset

No. (Hex.)	Name	Description	Default (Range)
E5-11 (0333)	Encoder Z-Pulse Offset	V/f OLV CLV **CLV/PM** Sets the encoder Z-pulse offset.	0.0° (-180.0 - +180.0°)

The drive uses the PM motor parameter settings and PM Stationary Auto-Tuning to set *E5-11* to the value input for "Encoder Z-Pulse Offset" automatically. The drive uses Encoder Tuning or the Rotational Auto-Tuning to set *E5-11*.

■ E5-24: PM Back-EMF L-L Vrms (mV/rpm)

No. (Hex.)	Name	Description	Default (Range)
E5-24 (0353)	PM Back-EMF L-L Vrms (mV/rpm)	V/f OLV CLV **CLV/PM** Sets the RMS value for PM motor line voltage.	0.0 (0.0 - 6500.0 mV/min^{-1})

Set this parameter when you use an SPM motor.

PM motor Auto-Tuning automatically sets this parameter to the value of [Back-EMF Voltage Constant (Ke)].

Set only *E5-09 [PM Back-EMF Vpeak (mV/(rad/s))]* or *E5-24* as the induced voltage constant.

Note:

When you set this parameter, also set *E5-09 = 0.0*. The drive will detect *oPE08 [Parameter Selection Error]* in these conditions:
- *E5-09 = 0.0* and *E5-24 = 0.0*
- *E5-09 ≠ 0.0* and *E5-24 ≠ 0.0*

■ E5-56: Back-EMF Setting Units Selection

No. (Hex.)	Name	Description	Default (Range)
E5-56 (1BF9)	Back-EMF Setting Units Selection	V/f OLV CLV **CLV/PM** Sets the setting units for *E5-09 [PM Back-EMF Vpeak (mV/(rad/s))]*, *E5-24 [PM Back-EMF L-L Vrms (mV/rpm)]*.	0 (0, 1)

If the drive detects *Er-18 [Back EMF Error]* when you do PM motor Auto-Tuning, set this parameter.

Note:

The lower the motor rated speed is compared to the motor rated capacity, the larger the induced voltage constant becomes. If the tuning result is more than the upper limit of the induced voltage constant, you can change this parameter to extend the upper limit of the induced voltage constant.

0 : With decimal point

E5-09 is set in units of 0.1 mV/(rad/s) and *E5-24* is set in units of 0.1 mV/min^{-1}. The upper limit of the induced voltage constant is 6500.0.

1 : No decimal point

E5-09 is set in units of 1 mV/(rad/s) and *E5-24* is set in units of 1 mV/min^{-1}. The upper limit of the induced voltage constant is extended from 6500.0 to 65000.

12.7 F: Options

F parameters set option cards, which function as interfaces for encoders, analog outputs, digital I/O, and fieldbus communication.

◆ F1: Encoder Option Setup

F1 parameters are used to set the operation of and protective function for the encoder option card. Table 12.13 lists the setting parameters available for each option card.

Refer to the instruction manual packaged with the encoder option card for more information on installing, wiring, and setting the encoder option cards.

⚠ WARNING Sudden Movement Hazard
Do test runs and examine the drive to make sure that the command references are correct. If you set the command reference incorrectly, it can cause damage to the drive or serious injury or death.

⚠ WARNING Sudden Movement Hazard
Make sure that the host controller circuitry has a correct safety design that will let you keep control of the motor if the drive loses speed feedback. If you do not have control of the motor, it can cause serious injury or death.

Table 12.13 Encoder Option Card Setting Parameters

Setting Parameter	Encoder Option Card			
	PG-B3	PG-X3	PG-F3	PG-E3
F1-01	x	x	x	x
F1-02	x	x	x	x
F1-03	x	x	x	x
F1-04	x	x	x	x
F1-05	x	x	x	x
F1-06	x	x	x	x
F1-08	x	x	x	x
F1-09	x	x	x	x
F1-10	x	x	x	x
F1-11	x	x	x	x
F1-14	x	x	x	x
F1-18	x	x	x	x
F1-19	x	x	x	x
F1-20	-	x	x	x
F1-48	-	-	x	x
F1-50	-	-	x	-
F1-51	-	-	x	x
F1-52	-	-	x	-
F1-53	-	-	x	-
F1-55	-	-	x	x
F1-56	-	-	x	x
F1-57	-	-	x	x
F1-58	-	-	x	x
F1-59	-	-	x	x
F1-60	-	-	x	x
F1-61	-	-	x	x
F1-62	-	-	x	x

Setting Parameter	Encoder Option Card			
	PG-B3	PG-X3	PG-F3	PG-E3
F1-63	-	-	x	x
F1-66 - F1-81	-	-	-	x
Number of cards that can be installed in a drive	2	2	1	1

■ F1-01: Encoder 1 Pulse Count (PPR)

No. (Hex.)	Name	Description	Default (Range)
F1-01 (0380)	Encoder 1 Pulse Count (PPR)	V/f OLV CLV CLV/PM Sets the number of output pulses for each motor revolution.	Determined by A1-02 (Determined by A1-02)

Note:

The default setting and setting range change when *A1-02 [Control Method Selection]* changes:
- When *A1-02 = 3 [CLV]*, the default setting is 1024, and the setting range is 1 ppr to 60000 ppr.
- When *A1-02 = 7 [CLV/PM]*, the default setting is 2048, and the setting range is 1 ppr to 20000 ppr.

■ F1-02: Encoder Signal Loss Detect Sel

No. (Hex.)	Name	Description	Default (Range)
F1-02 (0381) Expert	Encoder Signal Loss Detect Sel	V/f OLV CLV CLV/PM Sets the method to stop the motor or let the motor continue operating when the drive detects *PGo [Encoder (PG) Feedback Loss]*.	1 (0 - 3)

If the drive does not detect ouput pulses from the encoder for the time set in *F1-14 [Encoder Open-Circuit Detect Time]*, it will trigger *PGo*.

Note:

Motor speed and load conditions can cause *ov [Overvoltage]* and *oC [Overcurrent]* faults.

0 : Ramp to Stop

The drive ramps the motor to stop in the deceleration ramp. Fault relay output terminal MA-MC turns ON, and MB-MC turns OFF.

1 : Coast to Stop

The output turns off and the motor coasts to stop. Fault relay output terminal MA-MC turns ON, and MB-MC turns OFF.

2 : Emergency Stop (Use C1-09)

The drive stops the motor in the deceleration ramp set in *C1-09 [Emergency Stop Ramp]*. Fault relay output terminal MA-MC turns ON, and MB-MC turns OFF.

3 : Alarm Only

The keypad shows *PGo* and the drive continues operation. Only use this setting in special conditions to prevent damage to the motor and machinery. The output terminal set for *Alarm [H2-01 to H2-05 = 10]* activates.

■ F1-03: Overspeed Detection Selection

No. (Hex.)	Name	Description	Default (Range)
F1-03 (0382) Expert	Overspeed Detection Selection	V/f OLV CLV CLV/PM Sets the method to stop the motor or let the motor continue operating when the drive detects *oS [Overspeed]*.	1 (0 - 3)

When the motor speed is more than the value set in *F1-08 [Overspeed Detection Level]* for longer than the time set in *F1-09 [Overspeed Detection Delay Time]*, the drive will detect *oS*.

0 : Ramp to Stop

The drive ramps the motor to stop in the deceleration ramp. Fault relay output terminal MA-MC turns ON, and MB-MC turns OFF.

1 : Coast to Stop

The output turns off and the motor coasts to stop. Fault relay output terminal MA-MC turns ON, and MB-MC turns OFF.

2 : Emergency Stop (Use C1-09)

The drive stops the motor in the deceleration ramp set in *C1-09 [Emergency Stop Ramp]*. Fault relay output terminal MA-MC turns ON, and MB-MC turns OFF.

3 : Alarm Only

The keypad shows *oS* and the drive continues operation. Only use this setting in special conditions to prevent damage to the motor and machinery. The output terminal set for *Alarm [H2-01 to H2-05 = 10]* activates.

■ F1-04: Speed Deviation Detection Select

No. (Hex.)	Name	Description	Default (Range)
F1-04 (0383) Expert	Speed Deviation Detection Select	V/f OLV CLV CLV/PM Sets the method to stop the motor or let the motor continue operating when the drive detects *dEv [Speed Deviation]*.	Determined by A1-02 (0 - 3)

Note:

The default setting changes when *A1-02 [Control Method Selection]* changes:
- When *A1-02 = 3 [CLV]*, the default setting is 3.
- When *A1-02 = 7 [CLV/PM]*, the default setting is 1.

When the difference between the speed reference and the motor speed is more than the value set in *F1-10 [Speed Deviation Detection Level]* for longer than the time set in *F1-11 [Speed Deviation Detect DelayTime]*, the drive will detect *dEv*.

0 : Ramp to Stop

The drive ramps the motor to stop in the deceleration ramp. Fault relay output terminal MA-MC turns ON, and MB-MC turns OFF.

1 : Coast to Stop

The output turns off and the motor coasts to stop. Fault relay output terminal MA-MC turns ON, and MB-MC turns OFF.

2 : Emergency Stop (Use C1-09)

The drive stops the motor in the deceleration ramp set in *C1-09 [Emergency Stop Ramp]*. Fault relay output terminal MA-MC turns ON, and MB-MC turns OFF.

3 : Alarm Only

The keypad shows *dEv* and the drive continues operation. Only use this setting in special conditions to prevent damage to the motor and machinery. The output terminal set for *Alarm [H2-01 to H2-05 = 10]* activates.

■ F1-05: Encoder 1 Rotation Selection

No. (Hex.)	Name	Description	Default (Range)
F1-05 (0384)	Encoder 1 Rotation Selection	V/f OLV CLV CLV/PM Sets the output sequence for the A and B pulses from the encoder, assuming that the motor is operating in the up direction.	Determined by A1-02 (0, 1)

Note:

The default setting changes when *A1-02 [Control Method Selection]* changes:
- When *A1-02 = 3 [CLV]*, the default setting is 0.
- When *A1-02 = 7 [CLV/PM]*, the default setting is 1.

Refer to the option card installation manual for more information about how to set the encoder pulse output sequence and make sure that it is correct.

0 : Pulse A leads in Up Direction

1 : Pulse B leads in Up Direction

■ F1-06: Encoder 1 Pulse Monitor Scaling

No. (Hex.)	Name	Description	Default (Range)
F1-06 (0385) Expert	Encoder 1 Pulse Monitor Scaling	V/f OLV CLV CLV/PM Sets the ratio between the pulse input and the pulse output of the encoder as a 3-digit number. The first digit is the numerator and the second and third digits are the denominator.	001 (001 - 032, 102 - 132 (1 - 1/32))

When the setting value is a 3-digit value (xyz), the dividing ratio is (1 + x)/yz

For example, when *F1-06 = 032*, the dividing ratio is 1/32.

Note:
When you use a single-pulse encoder, the dividing ratio for the monitor signal is 1:1.

■ F1-08: Overspeed Detection Level

No. (Hex.)	Name	Description	Default (Range)
F1-08 (0387) Expert	Overspeed Detection Level	V/f OLV CLV CLV/PM Sets the detection level of *oS [Overspeed]* as a percentage of *E1-04 [Maximum Output Frequency]*.	115% (0 - 120%)

When the motor speed is more than the value set in *F1-08* for longer than the time set in *F1-09 [Overspeed Detection Delay Time]*, the drive will detect *oS*.

■ F1-09: Overspeed Detection Delay Time

No. (Hex.)	Name	Description	Default (Range)
F1-09 (0388) Expert	Overspeed Detection Delay Time	V/f OLV CLV CLV/PM Sets the length of time that the speed feedback must be more than the *F1-08* level to cause *oS [Overspeed]*.	0.0 s (0.0 - 2.0 s)

When the motor speed is more than the value set in *F1-08 [Overspeed Detection Level]* for longer than the time set in *F1-09*, the drive will detect *oS*.

■ F1-10: Speed Deviation Detection Level

No. (Hex.)	Name	Description	Default (Range)
F1-10 (0389) Expert	Speed Deviation Detection Level	V/f OLV CLV CLV/PM Sets the detection level of *dEv [Speed Deviation]* as a percentage of *E1-04 [Maximum Output Frequency]*.	10% (0 - 50%)

When the speed deviation between the speed reference and the actual motor speed is more than the value set in *F1-10* for longer than the time set in *F1-11 [Speed Deviation Detect DelayTime]*, the drive will detect *dEv*.

■ F1-11: Speed Deviation Detect DelayTime

No. (Hex.)	Name	Description	Default (Range)
F1-11 (038A) Expert	Speed Deviation Detect DelayTime	V/f OLV CLV CLV/PM Sets the length of time that the difference between the speed reference and speed feedback must be more than the level in *F1-10* to cause *dEv [Speed Deviation]*.	0.5 s (0.0 - 10.0 s)

When the speed deviation between the speed reference and the actual motor speed is more than the value set in *F1-10 [Speed Deviation Detection Level]* for longer than the time set in *F1-11*, the drive will detect *dEv*.

■ F1-14: Encoder Open-Circuit Detect Time

No. (Hex.)	Name	Description	Default (Range)
F1-14 (038D) Expert	Encoder Open-Circuit Detect Time	V/f OLV CLV CLV/PM Sets the length of time that the drive must not receive a pulse signal to cause *PGo [Encoder (PG) Feedback Loss]*.	2.0 s (0.0 - 10.0 s)

If the drive does not detect output pulses from the encoder for longer than the time set in *F1-14*, the drive will detect *PGo*.

Note:
Motor speed and load conditions can cause *ov [Overvoltage]* and *oC [Overcurrent]* faults.

■ F1-18: Deviation 3 Detection Selection

No. (Hex.)	Name	Description	Default (Range)
F1-18 (03AD) Expert	Deviation 3 Detection Selection	V/f OLV CLV CLV/PM Sets the number of rotations necessary to detect conditions that invert the torque reference and rate of acceleration and cause *dv3 [Inversion Detection]*.	10 (0 - 10)

When the drive detects these two conditions at the same time for the number of times set in *F1-18*, the drive will detect *dv3*.

- The torque reference and acceleration are in opposite directions. For example, torque reference is in elevator up direction and the acceleration is in a negative direction.
- The difference between the speed reference and the actual motor speed is more than 30%.

Note:
- Reference the setting value for *E5-11 [Encoder Z-Pulse Offset]* and the δθ value found on the motor nameplate. A usual cause for a *dv3* fault is an incorrect *E5-11* setting.
- Set *F1-18 = 0* to disable the function.

■ F1-19: Deviation 4 Detection Selection

No. (Hex.)	Name	Description	Default (Range)
F1-19 (03AE) Expert	Deviation 4 Detection Selection	V/f OLV CLV CLV/PM Sets the number of pulses necessary to cause *dv4 [Inversion Prevention Detection]*.	128 (0 - 5000)

The drive detects a *dv4 [Inversion Prevention Detection]* fault when the pulses in a reverse direction to the speed reference are input for longer than the time set in *F1-19*.

Note:
- Refer to the *E5-11 [Encoder Z-Pulse Offset]* value and the Δθ value shown on the motor nameplate. An incorrect *E5-11* value will often be the cause of a *dv4* fault.
- When you use the drive in an application that rotates the motor from the load side in the reverse direction of the speed reference, set *F1-19 = 0*.

■ F1-20: Encoder 1 PCB Disconnect Detect

No. (Hex.)	Name	Description	Default (Range)
F1-20 (03B4)	Encoder 1 PCB Disconnect Detect	V/f OLV CLV CLV/PM Sets the function that enables and disables detection of a disconnected encoder connection cable to cause *PGoH [Encoder (PG) Hardware Fault]*.	1 (0, 1)

0 : Disabled

1 : Enabled

■ F1-29: dEV Detection Condition Select

No. (Hex.)	Name	Description	Default (Range)
F1-29 (03BF) Expert	dEV Detection Condition Select	V/f OLV CLV CLV/PM Sets when *dEv [Speed Deviation]* detection is active.	2 (0 - 2)

0 : @ Ref=SFS=MtrSpd

The drive starts *dEV* detection after speed reference, SFS output and motor speed align.

1 : @ Ref=SFS Output

The drive starts *dEV* detection after speed reference and SFS output align.

2 : Always during Run

The drive always detects *dEv* during Run.

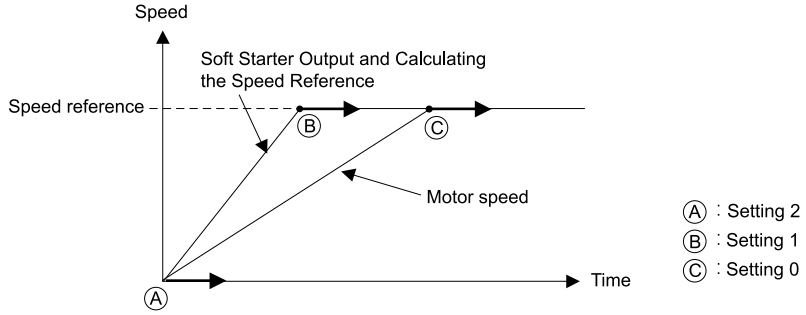

Figure 12.22 Speed Deviation Detection Conditions Flowchart

■ F1-48: Detect Speed Filter

No. (Hex.)	Name	Description	Default (Range)
F1-48 (03A6) Expert	Detect Speed Filter	V/f OLV CLV CLV/PM Sets the function to filter the absolute encoder detection speed. Usually it is not necessary to change this setting.	4 (0 - 6)

If the motor or machine vibrates during Position Lock, adjust the setting value in 1-unit increments.

Note:
This parameter is disabled when set to 0.

■ F1-50: PG-F3 Option Encoder Type

No. (Hex.)	Name	Description	Default (Range)
F1-50 (03D2)	PG-F3 Option Encoder Type	V/f OLV CLV CLV/PM Sets the type of encoder connected to the PG-F3 option.	0 (0 - 2)

0 : EnDat Sin/Cos
1 : EnDat Serial Only
2 : HIPERFACE

■ F1-51: PG-F3 PGoH Detection Level

No. (Hex.)	Name	Description	Default (Range)
F1-51 (03D3) Expert	PG-F3 PGoH Detection Level	V/f OLV CLV CLV/PM The drive will detect *PGoH [Encoder (PG) Hardware Fault]* if the value of this parameter is smaller than the value of $\sqrt{\sin^2\theta + \cos^2\theta}$.	80% (1 - 100%)

The drive will detect *PGoH* if the value of this parameter is smaller than the value of $\sqrt{\sin^2\theta + \cos^2\theta}$.

Regarding the expression $\sqrt{\sin^2\theta + \cos^2\theta}$, Sin θ is the single-track (phase B) output from the encoder and Cos θ is the single-track (phase A) output from the encoder.

Note:
This function is enabled when *F1-20 = 1 [Encoder 1 PCB Disconnect Detect = Enabled]*.

■ F1-52: Serial Encoder Comm Speed

No. (Hex.)	Name	Description	Default (Range)
F1-52 (03D4) Expert	Serial Encoder Comm Speed	V/f OLV CLV CLV/PM Sets the communication speed between the PG-F3 option and the serial encoder.	0 (0 - 2)

Note:
This function is enabled when *F1-50 = 1 or 2 [PG-F3 Option Encoder Type = EnDat Serial Only or HIPERFACE]*.

0 : 1M/9600bps
1 : 500k/19200bps
2 : 1M/38400bps

■ F1-53: Encoder EEPROM Access

No. (Hex.)	Name	Description	Default (Range)
F1-53 (02E0) Expert	Encoder EEPROM Access	V/f OLV CLV CLV/PM Sets the function to save drive parameters to and load them from the EEPROM of the encoder.	0 (0 - 3)

0 : No Action
1 : Save (Drive → Encoder)
The drive saves the parameter settings to the EEPROM of the encoder.
2 : Load (Encoder → Drive)

The drive loads the saved parameter settings from the EEPROM of the encoder.

3 : Verify

The drive examines whether the parameter settings in the drive agree with the parameters saved in the EEPROM of the encoder.

When you use this function, the drive saves parameters shown in Table 12.14 to and loads them from the EEPROM of the encoder.

When you set *F1-53 = 1, 2, or 3*, the drive will do the selected function, and it will show one of these messages on the keypad:

- [Save Completed]
- [Load Completed]
- [Verify Completed]

Note:

- You must use the keypad to set this parameter.
- When *F1-50 ≠ 1 [PG-F3 Option Encoder Type ≠ EnDat Serial Only]*, the keypad will not show this parameter.
- When you start up the elevator, set *F1-53 = 2* to load the saved drive parameters.
- Encoder EEPROM Access does not save *E5-56 [Back-EMF Setting Units Selection]*. When you load parameter settings, set *E5-56* correctly.

Table 12.14 Parameters to Save and Load

Parameter No.	Parameter Name
E1-04	Maximum Output Frequency
E1-05	Maximum Output Voltage
E1-06	Base Frequency
E5-02	PM Motor Rated Power
E5-03	PM Motor Rated Current (FLA)
E5-04	PM Motor Pole Count
E5-05	PM Motor Resistance (ohms/phase)
E5-06	PM d-axis Inductance (mH/phase)

Parameter No.	Parameter Name
E5-07	PM q-axis Inductance (mH/phase)
E5-09	PM Back-EMF Vpeak (mV/(rad/s))
E5-11	Encoder Z-Pulse Offset
E5-24	PM Back-EMF L-L Vrms (mV/rpm)
F1-01	Encoder 1 Pulse Count (PPR)
F1-05	Encoder 1 Rotation Selection
o1-04	V/f Pattern Display Unit

■ F1-55: Encoder A-Phase Offset Voltage

No. (Hex.)	Name	Description	Default (Range)
F1-55 (02E2) Expert	Encoder A-Phase Offset Voltage	V/f OLV CLV CLV/PM Sets the A-phase offset voltage.	2.500 V (1.500 - 3.500 V)

■ F1-56: Encoder A-Phase Gain

No. (Hex.)	Name	Description	Default (Range)
F1-56 (02E3) Expert	Encoder A-Phase Gain	V/f OLV CLV CLV/PM Sets the A-phase gain.	1.090 V (0.500 - 1.750 V)

■ F1-57: Encoder B-Phase Offset Voltage

No. (Hex.)	Name	Description	Default (Range)
F1-57 (02E4) Expert	Encoder B-Phase Offset Voltage	V/f OLV CLV CLV/PM Sets the B-phase offset voltage.	2.500 V (1.500 - 3.500 V)

■ F1-58: Encoder B-Phase Gain

No. (Hex.)	Name	Description	Default (Range)
F1-58 (02E5) Expert	Encoder B-Phase Gain	V/f OLV CLV CLV/PM Sets the B-phase gain.	1.090 V (0.500 - 1.750 V)

■ F1-59: Encoder C-Phase Offset Voltage

No. (Hex.)	Name	Description	Default (Range)
F1-59 (02E6) Expert	Encoder C-Phase Offset Voltage	V/f OLV CLV CLV/PM Sets the C-phase offset voltage.	2.500 V (1.500 - 3.500 V)

■ F1-60: Encoder C-Phase Gain

No. (Hex.)	Name	Description	Default (Range)
F1-60 (02E7) Expert	Encoder C-Phase Gain	V/f OLV CLV CLV/PM Sets the C-phase gain.	1.090 V (0.500 - 1.750 V)

■ F1-61: Encoder D-Phase Offset Voltage

No. (Hex.)	Name	Description	Default (Range)
F1-61 (02E8) Expert	Encoder D-Phase Offset Voltage	V/f OLV CLV CLV/PM Sets the D-phase offset voltage.	2.500 V (1.500 - 3.500 V)

■ F1-62: Encoder D-Phase Gain

No. (Hex.)	Name	Description	Default (Range)
F1-62 (02E9) Expert	Encoder D-Phase Gain	V/f OLV CLV CLV/PM Sets the D-phase gain.	1.090 V (0.500 - 1.750 V)

■ F1-63: PG-E3 R-Phase Select

No. (Hex.)	Name	Description	Default (Range)
F1-63 (02DF) Expert	PG-E3 R-Phase Select	V/f OLV CLV CLV/PM Sets the function to enable or disable the R-phase when you use a PG-E3 option card.	0 (0, 1)

0 : Disabled

The R-phase is not used. The rotor magnet position is calculated from the C-phase and D-phase signal only.

1 : Enabled

The R-phase signals are used to determine the rotor magnet position.

■ F1-66: Encoder Adjustment Value 1

No. (Hex.)	Name	Description	Default (Range)
F1-66 (0B9A) Expert	Encoder Adjustment Value 1	V/f OLV CLV CLV/PM Sets encoder offset 1 for the PG-E3 option card. When you do Auto-Tuning, the drive automatically sets this parameter.	0 (0 - FFFF)

■ F1-67: Encoder Adjustment Value 2

No. (Hex.)	Name	Description	Default (Range)
F1-67 (0B9B) Expert	Encoder Adjustment Value 2	V/f OLV CLV CLV/PM Sets encoder offset 2 for the PG-E3 option card. When you do Auto-Tuning, the drive automatically sets this parameter.	0 (0 - FFFF)

■ F1-68: Encoder Adjustment Value 3

No. (Hex.)	Name	Description	Default (Range)
F1-68 (0B9C) Expert	Encoder Adjustment Value 3	V/f OLV CLV CLV/PM Sets encoder offset 3 for the PG-E3 option card. When you do Auto-Tuning, the drive automatically sets this parameter.	0 (0 - FFFF)

■ F1-69: Encoder Adjustment Value 4

No. (Hex.)	Name	Description	Default (Range)
F1-69 (0B9D) Expert	Encoder Adjustment Value 4	V/f OLV CLV CLV/PM Sets encoder offset 4 for the PG-E3 option card. This parameter is automatically set by the execution of Auto-Tuning of PG-E3 encoder characteristics.	0 (0 - FFFF)

■ F1-70: Encoder Adjustment Value 5

No. (Hex.)	Name	Description	Default (Range)
F1-70 (0B9E) Expert	Encoder Adjustment Value 5	V/f OLV CLV CLV/PM Sets encoder offset 5 for the PG-E3 option card. When you do Auto-Tuning, the drive automatically sets this parameter.	0 (0 - FFFF)

■ F1-71: Encoder Adjustment Value 6

No. (Hex.)	Name	Description	Default (Range)
F1-71 (0B9F) Expert	Encoder Adjustment Value 6	V/f OLV CLV CLV/PM Sets encoder offset 6 for the PG-E3 option card. When you do Auto-Tuning, the drive automatically sets this parameter.	0 (0 - FFFF)

■ F1-72: Encoder Adjustment Value 7

No. (Hex.)	Name	Description	Default (Range)
F1-72 (0BA0) Expert	Encoder Adjustment Value 7	V/f OLV CLV CLV/PM Sets encoder offset 7 for the PG-E3 option card. When you do Auto-Tuning, the drive automatically sets this parameter.	0 (0 - FFFF)

■ F1-73: Encoder Adjustment Value 8

No. (Hex.)	Name	Description	Default (Range)
F1-73 (0BA1) Expert	Encoder Adjustment Value 8	V/f OLV CLV CLV/PM Sets encoder offset 8 for the PG-E3 option card. When you do Auto-Tuning, the drive automatically sets this parameter.	0 (0 - FFFF)

■ F1-74: Encoder Adjustment Value 9

No. (Hex.)	Name	Description	Default (Range)
F1-74 (0BA2) Expert	Encoder Adjustment Value 9	V/f OLV CLV CLV/PM Sets encoder offset 9 for the PG-E3 option card. When you do Auto-Tuning, the drive automatically sets this parameter.	0 (0 - FFFF)

■ F1-75: Encoder Adjustment Value 10

No. (Hex.)	Name	Description	Default (Range)
F1-75 (BA30) Expert	Encoder Adjustment Value 10	V/f OLV CLV CLV/PM Sets encoder offset 10 for the PG-E3 option card. When you do Auto-Tuning, the drive automatically sets this parameter.	0 (0 - FFFF)

■ F1-76: Encoder Adjustment Value 11

No. (Hex.)	Name	Description	Default (Range)
F1-76 (0BA4) Expert	Encoder Adjustment Value 11	V/f OLV CLV CLV/PM Sets encoder offset 11 for the PG-E3 option card. When you do Auto-Tuning, the drive automatically sets this parameter.	0 (0 - FFFF)

■ F1-77: Encoder Adjustment Value 12

No. (Hex.)	Name	Description	Default (Range)
F1-77 (0BA5) Expert	Encoder Adjustment Value 12	V/f OLV CLV CLV/PM Sets encoder offset 12 for the PG-E3 option card. When you do Auto-Tuning, the drive automatically sets this parameter.	0 (0 - FFFF)

■ F1-78: Encoder Adjustment Value 13

No. (Hex.)	Name	Description	Default (Range)
F1-78 (0BA6) Expert	Encoder Adjustment Value 13	V/f OLV CLV CLV/PM Sets encoder offset 13 for the PG-E3 option card. When you do Auto-Tuning, the drive automatically sets this parameter.	0 (0 - FFFF)

■ F1-79: Encoder Adjustment Value 14

No. (Hex.)	Name	Description	Default (Range)
F1-79 (0BA7) Expert	Encoder Adjustment Value 14	V/f OLV CLV CLV/PM Sets encoder offset 14 for the PG-E3 option card. When you do Auto-Tuning, the drive automatically sets this parameter.	0 (0 - FFFF)

■ F1-80: Encoder Adjustment Value 15

No. (Hex.)	Name	Description	Default (Range)
F1-80 (0BA8) Expert	Encoder Adjustment Value 15	V/f OLV CLV CLV/PM Sets encoder offset 15 for the PG-E3 option card. When you do Auto-Tuning, the drive automatically sets this parameter.	0 (0 - FFFF)

■ F1-81: Encoder Adjustment Value 16

No. (Hex.)	Name	Description	Default (Range)
F1-81 (0BA9) Expert	Encoder Adjustment Value 16	V/f OLV CLV CLV/PM Sets encoder offset 16 for the PG-E3 option card. When you do Auto-Tuning, the drive automatically sets this parameter.	0 (0 - FFFF)

◆ F3: Digital Input Option

F3 parameters set the type of input signal to use with digital input option card DI-A3.

Use these digital inputs to set the frequency reference when you install the DI-A3 card in a drive.

- Binary, 16-bit/BCD, 4-digit input
- Binary, 12-bit/BCD, 3-digit input
- Binary, 8-bit/BCD, 2-digit input

Set *b1-01 = 3 [Speed Reference Selection 1 = Option PCB]* to use this card as the speed reference input. The input signal is isolated input of 24 Vdc and 8 mA.

You can also use the DI-A3 option as an MFDI, if the setting of *F3-01* is correct.

⚠ WARNING Sudden Movement Hazard

Do test runs and examine the drive to make sure that the command references are correct. If you set the command reference incorrectly, it can cause damage to the drive or serious injury or death.

■ MFDI for DI-A3

Set *F3-01 = 8 [Digital Input Function Selection = Multi-Function Digital Input]* and *b1-01 ≠ 3 [Speed Reference Selection 1 ≠ Option PCB]* to use digital input option DI-A3 as an MFDI.

Use *F3-10 to F3-25 [Terminal D0 Function Selection to Terminal DF Function Selection]* to set the function for the DI-A3 terminals.

Note:
- Refer to *H1-xx* "Multi-function Digital Input Setting Values" for more information about MFDI setting values.
- You cannot set values *20 to 2F [External Fault]* for *F3-10* to *F3-25*.
- When you do not use DI-A3 as an MFDI, set *F3-10 to F3-25 = F [Not Used]*.
- The drive reads DI-A3 terminal Dx two times as specified by *b1-06 [Digital Input Reading]*.
- If you set *F3-01 = 8* when DI-A3 is the speed reference source (*b1-01 = 3 [Speed Reference Selection 1 = Option PCB]*), it will trigger *oPE05 [Run Cmd/Speed Ref Source Sel Err]*.

■ F3-01: Digital Input Function Selection

No. (Hex.)	Name	Description	Default (Range)
F3-01 (0390) Expert	Digital Input Function Selection	V/f OLV CLV CLV/PM Sets the data format of digital input signals. This parameter is enabled when *o1-03 = 0 or 1 [Speed Display Unit Selection = 0.01 Hz or 0.01% (100% = E1-04)]*.	0 (0 - 8)

Note:

When *o1-03 = 2 [Revolutions Per Minute (RPM)]* or *3 [User Units]*, the input signal type is BCD. The *o1-03* value sets the setting units.

0 : BCD, 1% units
1 : BCD, 0.1% units
2 : BCD, 0.01% units
3 : BCD, 1 Hz units
4 : BCD, 0.1 Hz units
5 : BCD, 0.01 Hz units
6 : BCD (5-digit), 0.01 Hz
7 : Binary input

The setting unit and setting range are different for different values of *F3-03 [Digital Input Data Length Select]*.

- *F3-03 = 0 [8-bit]*: 100%/255 (-255 to +255)
- *F3-03 = 1 [12-bit]*: 100%/4095 (-4095 to +4095)
- *F3-03 = 2 [16-bit]*: 100%/30000 (-33000 to +33000)

8 : Multi-Function Digital Input

The DI-A3 option is also used as a multi-function digital input terminal.

■ F3-03: Digital Input Data Length Select

No. (Hex.)	Name	Description	Default (Range)
F3-03 (03B9) Expert	Digital Input Data Length Select	V/f OLV CLV CLV/PM Sets the number of bits to set the speed reference with *DI-A3*.	2 (0 - 2)

0 : 8-bit
1 : 12-bit
2 : 16-bit

Table 12.15 DI-A3 Terminal Function Selection

Terminal Block	Terminal Name	BCD, Signed [F3-01 = 0 to 5]						BCD, Unsigned [F3-01 = 6] *1		Binary, Signed [F3-01 = 7]		
		8-bit [F3-03 = 0]		12-bit [F3-03 = 1]		16-bit [F3-03 = 2]				8-bit [F3-03 = 0]	12-bit [F3-03 = 1]	16-bit [F3-03 = 2]
TB2	D0	1 digit (0 - 9)	1	1 digit (0 - 9)	1	1 digit (0 - 9)	1	1 digit (0, 2, 4, 6, 8)	2	bit 0	bit 0	bit 0
	D1		2		2		2		4	bit 1	bit 1	bit 1
	D2		4		4		4		8	bit 2	bit 2	bit 2
	D3		8		8		8	2 digits (0 - 9)	1	bit 3	bit 3	bit 3
	D4	2 digits (0 - 15) *2	1	2 digits (0 - 9)	1	2 digits (0 - 9)	1		2	bit 4	bit 4	bit 4
	D5		2		2		2		4	bit 5	bit 5	bit 5
	D6		4		4		4		8	bit 6	bit 6	bit 6
	D7		8		8		8	3 digits (0 - 9)	1	bit 7	bit 7	bit 7
TB3	D8	-	-	3 digits (0 - 15) *2	1	3 digits (0 - 9)	-		2	-	bit 8	bit 8
	D9		-		2		-		4	-	bit 9	bit 9
	DA		-		4		-		8	-	bit 10	bit 10
	DB		-		8		-	4 digits (0 - 9)	1	-	bit 11	bit 11
	DC	-	-	-	-	4 digits (0 - 15) *2	-		2	-	-	bit 12
	DD		-		-		-		4	-	-	bit 13
	DE		-		-		-		8	-	-	bit 14
	DF		-		-		-	5 digits (0 - 3)	1	-	-	bit 15
TB1	SI	SIGN (encoded) signal 0: Up command, 1: Down command							2	SIGN (encoded) signal 0: Up command, 1: Down command		
	SE	SET (loaded) signal 1: Loads the value set for D0 to DF and SI.										
	SP	Internal power supply: 24 V ± 5%										
	SC	Input signal common										
	SN	Internal power supply common: 0 V										
	SD	Cable sheath connection terminal (ungrounded)										
	FE	Cable sheath connection terminal (grounded)										

*1 When you set *F3-03 = 2 [Digital Input Data Length Select = 16-bit]*, it enables *F3-01 = 6 [Digital Input Function Selection = BCD (5-digit), 0.01 Hz]* and the BCD can set a frequency between 0.00 Hz to 399.8 Hz. Note that terminal SI is also used as for data bits. Negative commands cannot be input as encoding information (positive/negative) cannot be added to the data.

The minimum bit value for the first BCD digit is 2. For this reason, 0.02 Hz is the smallest setting unit available for this frequency setting. If *F3-03 ≠ 2* while *F3-01 = 6* it will cause *oPE05 [Run Cmd/Speed Ref Source Sel Err]*.

*2 You can set the most significant digit to a value between 0 to 15 when you use “BCD, Signed”. You can set other digits to a value between 0 to 9.

■ F3-10: Terminal D0 Function Selection

No. (Hex.)	Name	Description	Default (Range)
F3-10 (0BE3) Expert	Terminal D0 Function Selection	V/f OLV CLV CLV/PM Sets the function for terminal D0 of the DI-A3 option when *F3-01 = 8 [Digital Input Function Selection = Multi-Function Digital Input]*.	F (1 - 1FF)

Note:

You cannot set *40 [Up Command]* and *41 [Down Command]* to this parameter.

■ F3-11: Terminal D1 Function Selection

No. (Hex.)	Name	Description	Default (Range)
F3-11 (0BE4) Expert	Terminal D1 Function Selection	V/f OLV CLV CLV/PM Sets the function for terminal D1 of the DI-A3 option when *F3-01 = 8 [Digital Input Function Selection = Multi-Function Digital Input]*.	F (1 - 1FF)

Note:
You cannot set *40 [Up Command]* and *41 [Down Command]* to this parameter.

■ F3-12: Terminal D2 Function Selection

No. (Hex.)	Name	Description	Default (Range)
F3-12 (0BE5) Expert	Terminal D2 Function Selection	V/f OLV CLV CLV/PM Sets the function for terminal D2 of the DI-A3 option when *F3-01 = 8 [Digital Input Function Selection = Multi-Function Digital Input]*.	F (1 - 1FF)

Note:
You cannot set *40 [Up Command]* and *41 [Down Command]* to this parameter.

■ F3-13: Terminal D3 Function Selection

No. (Hex.)	Name	Description	Default (Range)
F3-13 (0BE6) Expert	Terminal D3 Function Selection	V/f OLV CLV CLV/PM Sets the function for terminal D3 of the DI-A3 option when *F3-01 = 8 [Digital Input Function Selection = Multi-Function Digital Input]*.	F (1 - 1FF)

Note:
You cannot set *40 [Up Command]* and *41 [Down Command]* to this parameter.

■ F3-14: Terminal D4 Function Selection

No. (Hex.)	Name	Description	Default (Range)
F3-14 (0BE7) Expert	Terminal D4 Function Selection	V/f OLV CLV CLV/PM Sets the function for terminal D4 of the DI-A3 option when *F3-01 = 8 [Digital Input Function Selection = Multi-Function Digital Input]*.	F (1 - 1FF)

Note:
You cannot set *40 [Up Command]* and *41 [Down Command]* to this parameter.

■ F3-15: Terminal D5 Function Selection

No. (Hex.)	Name	Description	Default (Range)
F3-15 (0BE8) Expert	Terminal D5 Function Selection	V/f OLV CLV CLV/PM Sets the function for terminal D5 of the DI-A3 option when *F3-01 = 8 [Digital Input Function Selection = Multi-Function Digital Input]*.	F (1 - 1FF)

Note:
You cannot set *40 [Up Command]* and *41 [Down Command]* to this parameter.

■ F3-16: Terminal D6 Function Selection

No. (Hex.)	Name	Description	Default (Range)
F3-16 (0BE9) Expert	Terminal D6 Function Selection	V/f OLV CLV CLV/PM Sets the function for terminal D6 of the DI-A3 option when *F3-01 = 8 [Digital Input Function Selection = Multi-Function Digital Input]*.	F (1 - 1FF)

Note:
You cannot set *40 [Up Command]* and *41 [Down Command]* to this parameter.

■ F3-17: Terminal D7 Function Selection

No. (Hex.)	Name	Description	Default (Range)
F3-17 (0BEA) Expert	Terminal D7 Function Selection	V/f OLV CLV CLV/PM Sets the function for terminal D7 of the DI-A3 option when *F3-01 = 8 [Digital Input Function Selection = Multi-Function Digital Input]*.	F (1 - 1FF)

Note:
You cannot set *40 [Up Command]* and *41 [Down Command]* to this parameter.

■ F3-18: Terminal D8 Function Selection

No. (Hex.)	Name	Description	Default (Range)
F3-18 (0BEB) Expert	Terminal D8 Function Selection	V/f OLV CLV CLV/PM Sets the function for terminal D8 of the DI-A3 option when *F3-01 = 8 [Digital Input Function Selection = Multi-Function Digital Input]*.	F (1 - 1FF)

Note:
You cannot set *40 [Up Command]* and *41 [Down Command]* to this parameter.

■ F3-19: Terminal D9 Function Selection

No. (Hex.)	Name	Description	Default (Range)
F3-19 (0BEC) Expert	Terminal D9 Function Selection	V/f OLV CLV CLV/PM Sets the function for terminal D9 of the DI-A3 option when *F3-01 = 8 [Digital Input Function Selection = Multi-Function Digital Input]*.	F (1 - 1FF)

Note:
You cannot set *40 [Up Command]* and *41 [Down Command]* to this parameter.

■ F3-20: Terminal DA Function Selection

No. (Hex.)	Name	Description	Default (Range)
F3-20 (0BED) Expert	Terminal DA Function Selection	V/f OLV CLV CLV/PM Sets the function for terminal DA of the DI-A3 option when *F3-01 = 8 [Digital Input Function Selection = Multi-Function Digital Input]*.	F (1 - 1FF)

Note:
You cannot set *40 [Up Command]* and *41 [Down Command]* to this parameter.

■ F3-21: Terminal DB Function Selection

No. (Hex.)	Name	Description	Default (Range)
F3-21 (0BEE) Expert	Terminal DB Function Selection	V/f OLV CLV CLV/PM Sets the function for terminal DB of the DI-A3 option when *F3-01 = 8 [Digital Input Function Selection = Multi-Function Digital Input]*.	F (1 - 1FF)

Note:
You cannot set *40 [Up Command]* and *41 [Down Command]* to this parameter.

■ F3-22: Terminal DC Function Selection

No. (Hex.)	Name	Description	Default (Range)
F3-22 (0BEF) Expert	Terminal DC Function Selection	V/f OLV CLV CLV/PM Sets the function for terminal DC of the DI-A3 option when *F3-01 = 8 [Digital Input Function Selection = Multi-Function Digital Input]*.	F (1 - 1FF)

Note:
You cannot set *40 [Up Command]* and *41 [Down Command]* to this parameter.

■ F3-23: Terminal DD Function Selection

No. (Hex.)	Name	Description	Default (Range)
F3-23 (0BF0) Expert	Terminal DD Function Selection	V/f OLV CLV CLV/PM Sets the function for terminal DD of the DI-A3 option when *F3-01 = 8 [Digital Input Function Selection = Multi-Function Digital Input]*.	F (1 - 1FF)

Note:
You cannot set *40 [Up Command]* and *41 [Down Command]* to this parameter.

■ F3-24: Terminal DE Function Selection

No. (Hex.)	Name	Description	Default (Range)
F3-24 (0BF1) Expert	Terminal DE Function Selection	V/f OLV CLV CLV/PM Sets the function for terminal DE of the DI-A3 option when *F3-01 = 8 [Digital Input Function Selection = Multi-Function Digital Input]*.	F (1 - 1FF)

Note:

You cannot set *40 [Up Command]* and *41 [Down Command]* to this parameter.

■ F3-25: Terminal DF Function Selection

No. (Hex.)	Name	Description	Default (Range)
F3-25 (0BF2) Expert	Terminal DF Function Selection	V/f OLV CLV CLV/PM Sets the function for terminal DF of the DI-A3 option when *F3-01 = 8 [Digital Input Function Selection = Multi-Function Digital Input]*.	F (1 - 1FF)

Note:

You cannot set *40 [Up Command]* and *41 [Down Command]* to this parameter.

◆ F4: Analog Output Option

F4 parameters set drive operation when you use analog monitor option card AO-A3. The AO-A3 card has 2 output terminals (terminals V1 and V2) for signals with an Output resolution of 11 bits (1/2048) + encoding and that have an output voltage range of -10 V to +10 V. Install an AO-A3 card to output analog signals that monitor the output status of the drive (output speed and output current).

Refer to the AO-A3 card manual for more information about how to install, wire, and set the AO-A3 card.

Use the *U monitor* number to set the monitor data to be output from terminals V1 and V2 on the AO-A3 card. Enter the last three digits of *Ux-xx* as the setting value.

• Use Gain and Bias to Adjust the Output Signal Level of Terminal V1

You must stop the drive to adjust the output signal. Use this procedure to calibrate the drive:

1. View the *F4-02 [Terminal V1 Gain]* value on the keypad.
   Terminal V1 will output a voltage = 100% of the monitor set in *F4-01 [Terminal V1 Function Selection]*.
2. View the monitor connected to terminal V1 and adjust *F4-02*.
3. View the *F4-05 [Terminal V1 Bias]* value on the keypad.
   Terminal V1 will output an analog signal = 100% of the parameter set in *F4-01*.
4. View the monitor connected to terminal V1 and adjust *F4-05*.

• Use Gain and Bias to Adjust the Output Signal Level of Terminal V2

You must stop the drive to adjust the output signal. Use this procedure to calibrate the drive:

1. View the *F4-04 [Terminal V2 Gain]* value on the keypad.
   Terminal V2 will output a voltage = 100% of the monitor set in *F4-03 [Terminal V2 Function Selection]*.
2. View the monitor connected to terminal V2 and adjust *F4-04*.
3. View the *F4-06 [Terminal V2 Bias]* value on the keypad.
   The analog signal equal to 0% of the parameter being set in *F4-03* will be output from terminal V2.
4. View the monitor connected to terminal V2 and adjust *F4-06*.

■ F4-01: Terminal V1 Function Selection

No. (Hex.)	Name	Description	Default (Range)
F4-01 (0391) Expert	Terminal V1 Function Selection	V/f OLV CLV CLV/PM Sets the monitor signal output from terminal V1.	102 (000 - 999)

Set the *x-xx* part of the *Ux-xx [Monitors]* to set monitor data to output from the option card. For example, set *F4-01 = 102* to monitor *U1-02 [Output Speed]*.

Note:

- You cannot use all of the monitors in all of the control methods.
- When you use the terminal in through mode, set this parameter to *000* or *031*. You can use MEMOBUS/Modbus communications or the communication option to set the terminal V1 output level from the PLC.

■ F4-02: Terminal V1 Gain

No. (Hex.)	Name	Description	Default (Range)
F4-02 (0392) RUN Expert	Terminal V1 Gain	V/f OLV CLV CLV/PM Sets the gain of the monitor signal that is sent from terminal V1. Set the analog signal output level from terminal V1 at 10 V or 20 mA as 100% when an output for monitoring items is 100%.	100.0% (-999.9 - +999.9%)

The maximum output voltage output from terminal V1 is ±10 V. Use *F4-07 [Terminal V1 Signal Level]* to set the signal level.

Example settings:

When you use these settings, and the monitored output voltage is at 100% (continuous rated output current of the drive), the output voltage of terminal V1 is 5 V (50% of 10 V). The output current is 200% of the continuous rated output current when terminal V1 outputs a maximum voltage of 10 V.

- *F4-01 [Terminal V1 Function Selection] = 102* (*U1-02*: Output Speed)
- *F4-02 = 50.0%*
- *F4-05 [Terminal V1 Bias] = 0.0%*
- *F4-07 = 0* (0 V to 10 V)

■ F4-03: Terminal V2 Function Selection

No. (Hex.)	Name	Description	Default (Range)
F4-03 (0393) Expert	Terminal V2 Function Selection	V/f OLV CLV CLV/PM Sets the monitor signal output from terminal V2.	103 (000 - 999)

Set the *x-xx* part of the *Ux-xx [Monitors]* to set monitor data to output from the option card. For example, set *F4-03 = 103* to monitor *U1-03 [Output Current]*.

Note:
- You cannot use all of the monitors in all of the control methods.
- When you use the terminal in through mode, set this parameter to *000* or *031*. You can use this setting to adjust the terminal V2 output from PLC through MEMOBUS/Modbus communications or a communications option.

■ F4-04: Terminal V2 Gain

No. (Hex.)	Name	Description	Default (Range)
F4-04 (0394) RUN Expert	Terminal V2 Gain	V/f OLV CLV CLV/PM Sets the gain of the monitor signal that is sent from terminal V2. Set the analog signal output level from terminal V2 at 10 V or 20 mA as 100% when an output for monitoring items is 100%.	50.0% (-999.9 - +999.9%)

The maximum output voltage output from terminal V2 is ±10 V. Use *F4-08 [Terminal V2 Signal Level]* to set the signal level.

Example settings:

When you use these settings, and the monitored output voltage is at 100% (continuous rated output current of the drive), the output voltage of terminal V2 is 5 V (50% of 10 V). The output current is 200% of the continuous rated output current when terminal V2 outputs a maximum voltage of 10 V.

- *F4-03 [Terminal V2 Function Selection] = 103* (*U1-03*: Output Current)
- *F4-04 = 50.0%*
- *F4-06 [Terminal V2 Bias] = 0.0%*
- *F4-08 = 0* (0 V to 10 V)

■ F4-05: Terminal V1 Bias

No. (Hex.)	Name	Description	Default (Range)
F4-05 (0395) RUN Expert	Terminal V1 Bias	V/f OLV CLV CLV/PM Sets the bias of the monitor signal that is sent from terminal V1. When an output for monitoring items is 0%, this parameter sets the analog signal output level from terminal V1 as a percentage of 10 V or 20 mA.	0.0% (-999.9 - +999.9%)

The maximum output voltage output from terminal V1 is ±10 V. Use *F4-07 [Terminal V1 Signal Level]* to set the signal level.

■ F4-06: Terminal V2 Bias

No. (Hex.)	Name	Description	Default (Range)
F4-06 (0396) RUN Expert	Terminal V2 Bias	V/f OLV CLV CLV/PM Sets the bias of the monitor signal that is sent from terminal V2. When an output for monitoring items is 0%, this parameter sets the analog signal output level from terminal V2 as a percentage of 10 V or 20 mA.	0.0% (-999.9 - +999.9%)

The maximum output voltage output from terminal V2 is ±10 V. Use *F4-08 [Terminal V2 Signal Level]* to set the signal level.

■ F4-07: Terminal V1 Signal Level

No. (Hex.)	Name	Description	Default (Range)
F4-07 (0397) Expert	Terminal V1 Signal Level	V/f OLV CLV CLV/PM Sets the output signal level for terminal V1.	1 (0, 1)

0 : 0 to 10V
1 : -10 to 10V

■ F4-08: Terminal V2 Signal Level

No. (Hex.)	Name	Description	Default (Range)
F4-08 (0398) Expert	Terminal V2 Signal Level	V/f OLV CLV CLV/PM Sets the output signal level for terminal V2.	1 (0, 1)

0 : 0 to 10V
1 : -10 to 10V

◆ F5: Digital Output Option

F5 parameters set the output mode and function of output signals when you use digital output option card DO-A3.

When you install a DO-A3 option to the drive, you can output isolated digital signals to monitor the drive operation status.

- 6 points of photocoupler output (48 V, 50 mA or less)
- 2 points of relay contact output (250 Vac, 30 Vdc: 1 A or less)

Refer to the DO-A3 option manual for more information about how to install, wire, and set the DO-A3 option.

■ Use Parameters to Select Output Modes

Use parameter *F5-09 [DO-A3 Output Mode Selection]* to set signal output from the DO-A3 card.

Table 12.16 Details of F5-09 and the DO-A3 Terminal Output

DO-A3 Terminal Block	DO-A3 Terminal Name	F5-09 = 0 [Predefined Individual Outputs] (Default)	F5-09 = 1 [Binary Output]	F5-09 = 2 [Programmable (F5-01 to F5-08)]
TB1	M1-M2	Zero speed detection in progress	During run	Depending on the setting of F5-07 [Terminal M1-M2 Function Select]
	M3-M4	During speed agreement	Minor fault (excluding bb [Baseblock])	Depending on the setting of F5-08 [Terminal M3-M4 Function Select]
TB2	P1-PC	oC [Overcurrent], GF [Ground Fault]	Coded output **Note:** Refer to Table 12.17 for more information.	Depending on the setting of F5-01 [Terminal P1-PC Function Select]
	P2-PC	ov [Overvoltage]		Depending on the setting of F5-02 [Terminal P2-PC Function Select]
	P3-PC	oL2 [Drive Overload]		Depending on the setting of F5-03 [Terminal P3-PC Function Select]
	P4-PC	Not used		Depending on the setting of F5-04 [Terminal P4-PC Function Select]
	P5-PC	oS [Overspeed]	Zero speed detection in progress	Depending on the setting of F5-05 [Terminal P5-PC Function Select]
	P6-PC	oH, oH1 [Heatsink Overheat] or oL1 [Motor Overload]	During speed agreement	Depending on the setting of F5-06 [Terminal P6-PC Function Select]

Table 12.17 Binary Output [F5-09 = 1]

Coded Output (Binary)	Description	DO-A3 Terminal Block TB2			
		Terminal P1-PC	Terminal P2-PC	Terminal P3-PC	Terminal P4-PC
0	No fault	0	0	0	0
1	oC [Overcurrent], GF [Ground Fault]	1	0	0	0
2	ov [Overvoltage]	0	1	0	0
3	oL2 [Drive Overload]	1	1	0	0
4	oH, oH1 [Heatsink Overheat]	0	0	1	0
5	oS [Overspeed]	1	0	1	0
6	Not used	0	1	1	0
7	rr [Dynamic Braking Transistor Fault]	1	1	1	0
8	EF3 to EF10 [External Fault (Terminals S3 to S10)]	0	0	0	1
9	CPFxx, oFAxx, oFbxx, oFCxx [Drive Hardware Fault] *1	1	0	0	1
A	oL1 [Motor Overload]	0	1	0	1
B	Not used	1	1	0	1
C	Uv1 [DC Bus Undervoltage], Uv2 [Control Power Undervoltage], Uv3 [Soft Charge Answerback Fault]	0	0	1	1
D	dEv [Speed Deviation]	1	0	1	1
E	PGo [Encoder (PG) Feedback Loss]	0	1	1	1
F	Not used	1	1	1	1

*1 The “xx” characters are different for different faults.

■ Digital Output Card Selection

Refer to “H2: Multi-function Digital Output” for more information about the functions that output from the terminals when *F5-09 = 2 [DO-A3 Output Mode Selection = Programmable (F5-01 to F5-08)]*. Use *F5-01 to F5-08* to set the output items.

No.	Name	Setting Range	Default
F5-01	Terminal P1-PC Function Select	0 - 1FF	0: During Run
F5-02	Terminal P2-PC Function Select	0 - 1FF	1: Zero Speed

No.	Name	Setting Range	Default
F5-03	Terminal P3-PC Function Select	0 - 1FF	2: Speed Agree 1
F5-04	Terminal P4-PC Function Select	0 - 1FF	4: Speed Detection 1
F5-05	Terminal P5-PC Function Select	0 - 1FF	6: Drive Ready
F5-06	Terminal P6-PC Function Select	0 - 1FF	37: During Frequency Output
F5-07	Terminal M1-M2 Function Select	0 - 1FF	F: Not Used
F5-08	Terminal M3-M4 Function Select	0 - 1FF	F: Not Used

■ F5-01: Terminal P1-PC Function Select

No. (Hex.)	Name	Description	Default (Range)
F5-01 (0399) Expert	Terminal P1-PC Function Select	V/f OLV CLV CLV/PM Sets the function of terminal P1-PC on the DO-A3 option. Set *F5-09 = 2 [DO-A3 Output Mode Selection = Programmable (F5-01 to F5-08)]* to enable this function.	0 (0 - 1FF)

■ F5-02: Terminal P2-PC Function Select

No. (Hex.)	Name	Description	Default (Range)
F5-02 (039A) Expert	Terminal P2-PC Function Select	V/f OLV CLV CLV/PM Sets the function of terminal P2-PC on the DO-A3 option. Set *F5-09 = 2 [DO-A3 Output Mode Selection = Programmable (F5-01 to F5-08)]* to enable this function.	1 (0 - 1FF)

■ F5-03: Terminal P3-PC Function Select

No. (Hex.)	Name	Description	Default (Range)
F5-03 (039B) Expert	Terminal P3-PC Function Select	V/f OLV CLV CLV/PM Sets the function of terminal P3-PC on the DO-A3 option. Set *F5-09 = 2 [DO-A3 Output Mode Selection = Programmable (F5-01 to F5-08)]* to enable this function.	2 (0 - 1FF)

■ F5-04: Terminal P4-PC Function Select

No. (Hex.)	Name	Description	Default (Range)
F5-04 (039C) Expert	Terminal P4-PC Function Select	V/f OLV CLV CLV/PM Sets the function of terminal P4-PC on the DO-A3 option. Set *F5-09 = 2 [DO-A3 Output Mode Selection = Programmable (F5-01 to F5-08)]* to enable this function.	4 (0 - 1FF)

■ F5-05: Terminal P5-PC Function Select

No. (Hex.)	Name	Description	Default (Range)
F5-05 (039D) Expert	Terminal P5-PC Function Select	V/f OLV CLV CLV/PM Sets the function of terminal P5-PC on the DO-A3 option. Set *F5-09 = 2 [DO-A3 Output Mode Selection = Programmable (F5-01 to F5-08)]* to enable this function.	6 (0 - 1FF)

■ F5-06: Terminal P6-PC Function Select

No. (Hex.)	Name	Description	Default (Range)
F5-06 (039E) Expert	Terminal P6-PC Function Select	V/f OLV CLV CLV/PM Sets the function of terminal P6-PC on the DO-A3 option. Set *F5-09 = 2 [DO-A3 Output Mode Selection = Programmable (F5-01 to F5-08)]* to enable this function.	37 (0 - 1FF)

■ F5-07: Terminal M1-M2 Function Select

No. (Hex.)	Name	Description	Default (Range)
F5-07 (039F) Expert	Terminal M1-M2 Function Select	V/f OLV CLV CLV/PM Sets the function of terminal M1-M2 on the DO-A3 option. Set *F5-09 = 2 [DO-A3 Output Mode Selection = Programmable (F5-01 to F5-08)]* to enable this function.	F (0 - 1FF)

■ F5-08: Terminal M3-M4 Function Select

No. (Hex.)	Name	Description	Default (Range)
F5-08 (03A0) Expert	Terminal M3-M4 Function Select	V/f OLV CLV CLV/PM Sets the function of terminal M3-M4 on the DO-A3 option. Set *F5-09 = 2 [DO-A3 Output Mode Selection = Programmable (F5-01 to F5-08)]* to enable this function.	F (0 - 1FF)

■ F5-09: DO-A3 Output Mode Selection

No. (Hex.)	Name	Description	Default (Range)
F5-09 (03A1) Expert	DO-A3 Output Mode Selection	V/f OLV CLV CLV/PM Sets the output mode of signals from the DO-A3 option.	0 (0 - 2)

Refer to Table 12.16 for more information.

0 : Predefined Individual Outputs

1 : Binary Output

2 : Programmable (F5-01 to F5-08)

◆ F6: Communication Options

F6 parameters set the basic communication settings and method of fault detection for the communication option card. The communication option card parameters include common option card parameters and communication protocol-specific parameters.

Table 12.18 lists the parameters that need to be set for each communication option card.

Refer to the technical manual for each communication option card for more information on installing, wiring, and configuring the details needed before starting communication.

⚠ WARNING Sudden Movement Hazard

Do test runs and examine the drive to make sure that the command references are correct. If you set the command reference incorrectly, it can cause damage to the drive or serious injury or death.

Table 12.18 Correspondence Between Communication Protocol and Parameters

Parameter	CANopen SI-S3
F6-01 to F6-03	x
F6-04	-
F6-06, F6-08	x
F6-35, F6-36	x

■ F6-01: Communication Error Selection

No. (Hex.)	Name	Description	Default (Range)
F6-01 (03A2) Expert	Communication Error Selection	V/f OLV CLV CLV/PM Sets the method to stop the motor or let the motor continue operating when the drive detects *bUS [Option Communication Error]*.	1 (0 - 3)

0 : Ramp to Stop

The drive ramps the motor to stop in the deceleration ramp. Fault relay output terminal MA-MC turns ON, and MB-MC turns OFF.

1 : Coast to Stop

The output turns off and the motor coasts to stop. Fault relay output terminal MA-MC turns ON, and MB-MC turns OFF.

2 : Emergency Stop (Use C1-09)

The drive stops the motor in the deceleration ramp set in *C1-09 [Emergency Stop Ramp]*. Fault relay output terminal MA-MC turns ON, and MB-MC turns OFF.

3 : Alarm Only

The keypad shows *bUS* and the drive continues operation at the current speed reference.

Note:

Separately prepare safety protection equipment and systems, for example emergency stop switches.

The output terminal set for *Alarm [H2-01 to H2-05 = 10]* activates.

■ F6-02: Comm External Fault (EF0) Detect

No. (Hex.)	Name	Description	Default (Range)
F6-02 (03A3) Expert	Comm External Fault (EF0) Detect	V/f OLV CLV CLV/PM Sets the conditions at which *EF0 [Option Card External Fault]* is detected.	0 (0, 1)

0 : Always Detected

1 : Detected during RUN Only

■ F6-03: Comm External Fault (EF0) Select

No. (Hex.)	Name	Description	Default (Range)
F6-03 (03A4) Expert	Comm External Fault (EF0) Select	V/f OLV CLV CLV/PM Sets the method to stop the motor or let the motor continue operating when the drive detects an *EF0 [Option Card External Fault]*.	1 (0 - 3)

0 : Ramp to Stop

The drive ramps the motor to stop in the deceleration ramp. Fault relay output terminal MA-MC turns ON, and MB-MC turns OFF.

1 : Coast to Stop

The output turns off and the motor coasts to stop. Fault relay output terminal MA-MC turns ON, and MB-MC turns OFF.

2 : Emergency Stop (Use C1-09)

The drive stops the motor in the deceleration ramp set in *C1-09 [Emergency Stop Ramp]*. Fault relay output terminal MA-MC turns ON, and MB-MC turns OFF.

3 : Alarm Only

The keypad shows *EF0* and the drive continues operation.

Note:

Separately prepare safety protection equipment and systems, for example emergency stop switches.

The output terminal set for *Alarm [H2-01 to H2-05 = 10]* activates.

■ F6-04: bUS Error Detection Time

No. (Hex.)	Name	Description	Default (Range)
F6-04 (03A5) Expert	bUS Error Detection Time	V/f OLV CLV CLV/PM Sets the delay time for the drive to detect *bUS [Option Communication Error]*.	2.0 s (0.0 - 5.0 s)

Note:

When you install an option card in the drive, the parameter value changes to 0.0 s.

■ F6-06: Torque Reference/Limit by Comm

No. (Hex.)	Name	Description	Default (Range)
F6-06 (03A7) Expert	Torque Reference/Limit by Comm	V/f OLV CLV CLV/PM Sets the function that enables and disables the torque reference and torque limit received from the communication option.	0 (0, 1)

0 : Disabled

1 : Enabled

■ F6-08: Comm Parameter Reset @Initialize

No. (Hex.)	Name	Description	Default (Range)
F6-08 (036A) Expert	Comm Parameter Reset @Initialize	V/f OLV CLV CLV/PM Sets the function to initialize *F6-xx parameters* when you use *A1-03 [Initialize Parameters]* to initialize the drive.	0 (0, 1)

0 : No Reset - Parameters Retained

1 : Reset Back to Factory Default

Note:

When you use *A1-03* to initialize the drive, this setting will not change.

■ F6-15: Comm. Option Parameters Reload

No. (Hex.)	Name	Description	Default (Range)
F6-15 (0B5B)	Comm. Option Parameters Reload	V/f OLV CLV CLV/PM Sets the update method when you change *F6-xx [Communication Options]*.	0 (0 - 2)

Note:

- Set *F6-15 = 0, 1* to reload *F6-xx*.
- Set *F6-15 = 0, 1* to reset the display on the keypad to *0*.

0 : Reload at Next Power Cycle

Restart the drive to update parameters.

1 : Reload Now

The changed parameters are updated without restarting the drive.

2 : Cancel Reload Request

Cancels *CyPo [Cycle Power to Accept Changes]*.

■ F6-35: CANopen Node ID Selection

No. (Hex.)	Name	Description	Default (Range)
F6-35 (03D0) Expert	CANopen Node ID Selection	V/f OLV CLV CLV/PM Sets the node address for CANopen communication. Restart the drive after you change the parameter setting.	0 (0 - 126)

Note:

Set an address that is different than all other node addresses. Do not set this parameter to *0*.

■ F6-36: CANopen Communication Speed

No. (Hex.)	Name	Description	Default (Range)
F6-36 (03D1) Expert	CANopen Communication Speed	V/f OLV CLV CLV/PM Sets the CANopen communications speed. Restart the drive after you change this parameter setting.	6 (0 - 8)

0 : Auto-detection

The drive detects the network communication speed and automatically adjusts the communications speed.

1 : 10 kbps

2 : 20 kbps

3 : 50 kbps

4 : 125 kbps

5 : 250 kbps

6 : 500 kbps

7 : 800 kbps

8 : 1 Mbps

12.8 H: Terminal Functions

H parameters assign functions to external input and output terminals.

◆ H1: Digital Inputs

⚠ WARNING Sudden Movement Hazard

Always turn OFF the Up/Down command before you change *b1-01 [Speed Reference Selection 1]*, *d1-18 [Speed Reference Selection Mode]*, or *H1-xx [MFDI Function Selection]*.
If the Up/Down command is ON when you change these parameter settings, the motor can unexpectedly start to run and cause serious injury or death.

H1 Parameters set the MFDI terminal functions.

■ H1-01 to H1-10 Terminal S1 to S10 Function Selection

The drive has ten MFDI terminals. Refer to Table 12.19 for drive default settings and functions.

Table 12.19 MFDI Default Settings and Functions

No.	Name	Default	Function
H1-01	Terminal S1 Function Selection	40	Up Command
H1-02	Terminal S2 Function Selection	41	Down Command
H1-03	Terminal S3 Function Selection	Determined by d1-18	*1
H1-04	Terminal S4 Function Selection	Determined by d1-18	*1
H1-05	Terminal S5 Function Selection	Determined by d1-18	*1
H1-06	Terminal S6 Function Selection	Determined by d1-18	*1
H1-07	Terminal S7 Function Selection	Determined by d1-18	*1
H1-08	Terminal S8 Function Selection	F	Not Used
H1-09	Terminal S9 Function Selection	F	Not Used
H1-10	Terminal S10 Function Selection	F	Not Used

*1 The drive default functions set for terminals S3 to S7 change when the *d1-18 [Speed Reference Selection Mode]* setting changes. Refer to Table 12.20 for more information.

Table 12.20 MFDI Default Settings and Functions for Terminals S3 to S7

No.	Name	d1-18 = 0 or 3		d1-18 = 1 or 2		d1-18 = 4	
		Default	Function	Default	Function	Default	Function
H1-03	Terminal S3 Function Selection	24	External Fault (NO-Always-Coast)	50	Nominal Speed	50	Nominal Speed
H1-04	Terminal S4 Function Selection	14	Fault Reset	54	Inspection Operation	F	Not Used
H1-05	Terminal S5 Function Selection	3	Multi-Step Speed Reference 1	51	Intermediate Speed	F	Not Used
H1-06	Terminal S6 Function Selection	4	Multi-Step Speed Reference 2	53	Leveling Speed	53	Leveling Speed
H1-07	Terminal S7 Function Selection	5	Multi-Step Speed Reference 3	F	Not Used	BA	Landing Zone

Refer to Table 12.21 and use *H1-xx [MFDI Function Selection]* to set the function.

Table 12.21 MFDI Setting Values

Setting Value	Function	Ref.
3	Multi-Step Speed Reference 1	594
4	Multi-Step Speed Reference 2	594
5	Multi-Step Speed Reference 3	594
6	Jog Reference Selection	594
7	Accel/Decel Ramp Selection 1	595
8 *1	Baseblock Command (N.O.)	595

Setting Value	Function	Ref.
9 *1	Baseblock Command (N.C.)	595
F *1	Not Used	596
14	Fault Reset	596
15 *1	Emergency Stop (N.O.)	596
16	Motor 2 Selection	597
17 *1	Emergency Stop (N.C.)	597

Setting Value	Function	Ref.
18	Timer Function	598
1A	Accel/Decel Ramp Selection 2	598
20 to 2F *1	External Fault	598
30	Creep Cancel	599
40 *1	Up Command	599
41 *1	Down Command	600
4B *1	Short Circuit MCFeedback (NO)	600
4C *1	Short Circuit MCFeedback (NC)	600
50	Nominal Speed	600
51	Intermediate Speed	600
52	Releveling Speed	600
53	Leveling Speed	601
54	Inspection Operation	601
55	Rescue Operation	601
56 *1	Motor Contactor Feedback N.O.	601

Setting Value	Function	Ref.
57	High Speed Limit Up	601
58	High Speed Limit Down	601
5A *1	Motor Contactor Feedback N.C.	601
5B *1	Brake Feedback N.C.	602
5C	Stop Distance Correction	602
5D	Brake Trq Req	602
67	Communications Test Mode	602
79 *1	Brake Feedback N.O.	602
BA	Landing Zone	602
BB	Standby	603
BC	Wake Up	603
103 to 1BC	Inverse Inputs of 3 to BC Sets the function of the selected MFDI to operate inversely. To select the function for inverse input, enter two digits 03 to BC for the “xx” in "1xx".	603

*1 Inverse input is not available.

■ H1-01: Terminal S1 Function Selection

No. (Hex.)	Name	Description	Default (Range)
H1-01 (0438) Expert	Terminal S1 Function Selection	V/f OLV CLV CLV/PM Sets the function for MFDI terminal S1.	40 (F, 40)

■ H1-02: Terminal S2 Function Selection

No. (Hex.)	Name	Description	Default (Range)
H1-02 (0439) Expert	Terminal S2 Function Selection	V/f OLV CLV CLV/PM Sets the function for MFDI terminal S2.	41 (F, 41)

■ H1-03: Terminal S3 Function Selection

No. (Hex.)	Name	Description	Default (Range)
H1-03 (0400)	Terminal S3 Function Selection	V/f OLV CLV CLV/PM Sets the function for MFDI terminal S3.	Determined by d1-18 (0 - 1FF)

Note:

The drive default settings and functions set for terminal S3 change when the *d1-18 [Speed Reference Selection Mode]* setting changes:

- When *d1-18 = 0 or 3 [Multi-speed Mode1 (d1-01 to 08) or Multi-speed Mode2 (d1-02 to 08)]*, the default setting is *24 [External Fault (NO-Always-Coast)]*.
- When *d1-18 = 1, 2, or 4 [High speed has priority, Leveling speed has priority, or Smart Replacement]*, the default setting is *50 [Nominal Speed]*.

Refer to Table 12.20 for more information.

■ H1-04: Terminal S4 Function Selection

No. (Hex.)	Name	Description	Default (Range)
H1-04 (0401)	Terminal S4 Function Selection	V/f OLV CLV CLV/PM Sets the function for MFDI terminal S4.	Determined by d1-18 (0 - 1FF)

Note:

The drive default settings and functions set for terminal S4 change when the *d1-18 [Speed Reference Selection Mode]* setting changes:
- When *d1-18 = 0 or 3 [Multi-speed Mode1 (d1-01 to 08) or Multi-speed Mode2 (d1-02 to 08)]*, the default setting is *14 [Fault Reset]*.
- When *d1-18 = 1 or 2, [High speed has priority or Leveling speed has priority]*, the default setting is *54 [Inspection Operation]*.
- When *d1-18 = 4 [Smart Replacement]*, the default setting is *F [Not Used]*.

Refer to Table 12.20 for more information.

■ H1-05: Terminal S5 Function Selection

No. (Hex.)	Name	Description	Default (Range)
H1-05 (0402)	Terminal S5 Function Selection	V/f OLV CLV CLV/PM Sets the function for MFDI terminal S5.	Determined by d1-18 (0 - 1FF)

Note:

The drive default settings and functions set for terminal S5 change when the *d1-18 [Speed Reference Selection Mode]* setting changes:
- When *d1-18 = 0 or 3 [Multi-speed Mode1 (d1-01 to 08) or Multi-speed Mode2 (d1-02 to 08)]*, the default setting is *3 [Multi-Step Speed Reference 1]*.
- When *d1-18 = 1 or 2, [High speed has priority or Leveling speed has priority]*, the default setting is *51 [Intermediate Speed]*.
- When *d1-18 = 4 [Smart Replacement]*, the default setting is *F [Not Used]*.

Refer to Table 12.20 for more information.

■ H1-06: Terminal S6 Function Selection

No. (Hex.)	Name	Description	Default (Range)
H1-06 (0403)	Terminal S6 Function Selection	V/f OLV CLV CLV/PM Sets the function for MFDI terminal S6.	Determined by d1-18 (0 - 1FF)

Note:

The drive default settings and functions set for terminal S6 change when the *d1-18 [Speed Reference Selection Mode]* setting changes:
- When *d1-18 = 0 or 3 [Multi-speed Mode1 (d1-01 to 08) or Multi-speed Mode2 (d1-02 to 08)]*, the default setting is *4 [Multi-Step Speed Reference 2]*.
- When *d1-18 = 1, 2, or 4 [High speed has priority, Leveling speed has priority, or Smart Replacement]*, the default setting is *53 [Leveling Speed]*.

Refer to Table 12.20 for more information.

■ H1-07: Terminal S7 Function Selection

No. (Hex.)	Name	Description	Default (Range)
H1-07 (0404)	Terminal S7 Function Selection	V/f OLV CLV CLV/PM Sets the function for MFDI terminal S7.	Determined by d1-18 (0 - 1FF)

Note:

The drive default settings and functions set for terminal S7 change when the *d1-18 [Speed Reference Selection Mode]* setting changes:
- When *d1-18 = 0 or 3 [Multi-speed Mode1 (d1-01 to 08) or Multi-speed Mode2 (d1-02 to 08)]*, the default setting is *5 [Multi-Step Speed Reference 3]*.
- When *d1-18 = 1 or 2, [High speed has priority or Leveling speed has priority]*, the default setting is *F [Not Used]*.
- When *d1-18 = 4 [Smart Replacement]*, the default setting is *BA [Landing Zone]*.

Refer to Table 12.20 for more information.

■ H1-08: Terminal S8 Function Selection

No. (Hex.)	Name	Description	Default (Range)
H1-08 (0405)	Terminal S8 Function Selection	V/f OLV CLV CLV/PM Sets the function for MFDI terminal S8.	F (0 - 1FF)

■ H1-09: Terminal S9 Function Selection

No. (Hex.)	Name	Description	Default (Range)
H1-09 (0406)	Terminal S9 Function Selection	V/f OLV CLV CLV/PM Sets the function for MFDI terminal S9.	F (0 - 1FF)

■ H1-10: Terminal S10 Function Selection

No. (Hex.)	Name	Description	Default (Range)
H1-10 (0407)	Terminal S10 Function Selection	V/f OLV CLV CLV/PM Sets the function for MFDI terminal S10.	F (0 - 1FF)

■ H1-21: Terminal S1 Function Select 2

No. (Hex.)	Name	Description	Default (Range)
H1-21 (0B70) Expert	Terminal S1 Function Select 2	V/f OLV CLV CLV/PM Sets the second function for MFDI terminal S1.	F (0 - 1FF)

Note:

You cannot set *40 [Up Command]* and *41 [Down Command]* to this parameter.

When MFDI terminal S1 activates, it will operate the function set to *H1-01 [Terminal S1 Function Selection]* and the function set to *H1-21* at the same time.

When the setting value is *F*, the function is disabled.

■ H1-22: Terminal S2 Function Select 2

No. (Hex.)	Name	Description	Default (Range)
H1-22 (0B71) Expert	Terminal S2 Function Select 2	V/f OLV CLV CLV/PM Sets the second function for MFDI terminal S2.	F (0 - 1FF)

Note:

You cannot set *40 [Up Command]* and *41 [Down Command]* to this parameter.

When MFDI terminal S2 activates, it will operate the function set to *H1-02 [Terminal S2 Function Selection]* and the function set to *H1-22* at the same time.

When the setting value is *F*, the function is disabled.

■ H1-23: Terminal S3 Function Select 2

No. (Hex.)	Name	Description	Default (Range)
H1-23 (0B72) Expert	Terminal S3 Function Select 2	V/f OLV CLV CLV/PM Sets the second function for MFDI terminal S3.	F (0 - 1FF)

Note:

You cannot set *40 [Up Command]* and *41 [Down Command]* to this parameter.

When MFDI terminal S3 activates, it will operate the function set to *H1-03 [Terminal S3 Function Selection]* and the function set to *H1-23* at the same time.

When the setting value is *F*, the function is disabled.

■ H1-24: Terminal S4 Function Select 2

No. (Hex.)	Name	Description	Default (Range)
H1-24 (0B73) Expert	Terminal S4 Function Select 2	V/f OLV CLV CLV/PM Sets the second function for MFDI terminal S4.	F (0 - 1FF)

Note:

You cannot set *40 [Up Command]* and *41 [Down Command]* to this parameter.

When MFDI terminal S4 activates, it will operate the function set to *H1-04 [Terminal S4 Function Selection]* and the function set to *H1-24* at the same time.

When the setting value is *F*, the function is disabled.

■ H1-25: Terminal S5 Function Select 2

No. (Hex.)	Name	Description	Default (Range)
H1-25 (0B74) Expert	Terminal S5 Function Select 2	V/f OLV CLV CLV/PM Sets the second function for MFDI terminal S5.	F (0 - 1FF)

Note:

You cannot set *40 [Up Command]* and *41 [Down Command]* to this parameter.

When MFDI terminal S5 activates, it will operate the function set to *H1-05 [Terminal S5 Function Selection]* and the function set to *H1-25* at the same time.

When the setting value is *F*, the function is disabled.

■ H1-26: Terminal S6 Function Select 2

No. (Hex.)	Name	Description	Default (Range)
H1-26 (0B75) Expert	Terminal S6 Function Select 2	V/f OLV CLV CLV/PM Sets the second function for MFDI terminal S6.	F (0 - 1FF)

Note:

You cannot set *40 [Up Command]* and *41 [Down Command]* to this parameter.

When MFDI terminal S6 activates, it will operate the function set to *H1-06 [Terminal S6 Function Selection]* and the function set to *H1-26* at the same time.

When the setting value is *F*, the function is disabled.

■ H1-27: Terminal S7 Function Select 2

No. (Hex.)	Name	Description	Default (Range)
H1-27 (0B76) Expert	Terminal S7 Function Select 2	V/f OLV CLV CLV/PM Sets the second function for MFDI terminal S7.	F (0 - 1FF)

Note:

You cannot set *40 [Up Command]* and *41 [Down Command]* to this parameter.

When MFDI terminal S7 activates, it will operate the function set to *H1-07 [Terminal S7 Function Selection]* and the function set to *H1-27* at the same time.

When the setting value is *F*, the function is disabled.

■ H1-28: Terminal S8 Function Select 2

No. (Hex.)	Name	Description	Default (Range)
H1-28 (0B77) Expert	Terminal S8 Function Select 2	V/f OLV CLV CLV/PM Sets the second function for MFDI terminal S8.	F (0 - 1FF)

Note:

You cannot set *40 [Up Command]* and *41 [Down Command]* to this parameter.

When MFDI terminal S8 activates, it will operate the function set to *H1-08 [Terminal S8 Function Selection]* and the function set to *H1-28* at the same time.

When the setting value is *F*, the function is disabled.

■ H1-29: Terminal S9 Function Select 2

No. (Hex.)	Name	Description	Default (Range)
H1-29 (0B78) Expert	Terminal S9 Function Select 2	V/f OLV CLV CLV/PM Sets the second function for MFDI terminal S9.	F (0 - 1FF)

Note:
You cannot set *40 [Up Command]* and *41 [Down Command]* to this parameter.

When MFDI terminal S9 activates, it will operate the function set to *H1-09 [Terminal S9 Function Selection]* and the function set to *H1-29* at the same time.

When the setting value is *F*, the function is disabled.

■ H1-30: Terminal S10 Function Select 2

No. (Hex.)	Name	Description	Default (Range)
H1-30 (0B79) Expert	Terminal S10 Function Select 2	V/f OLV CLV CLV/PM Sets the second function for MFDI terminal S10.	F (0 - 1FF)

Note:
You cannot set *40 [Up Command]* and *41 [Down Command]* to this parameter.

When MFDI terminal S10 activates, it will operate the function set to *H1-10 [Terminal S10 Function Selection]* and the function set to *H1-30* at the same time.

When the setting value is *F*, the function is disabled.

◆ MFDI Setting Values

Select a function set with *H1-01 to H1-10*.

■ 3: Multi-Step Speed Reference 1

Setting Value	Function	Description
3	Multi-Step Speed Reference 1	V/f OLV CLV CLV/PM Uses speed references *d1-01 to d1-08* to set a multi-step speed reference.

Note:
Refer to *Speed Selection Using Digital Inputs (b1-01 = 0) on page 170* for more information.

■ 4: Multi-Step Speed Reference 2

Setting Value	Function	Description
4	Multi-Step Speed Reference 2	V/f OLV CLV CLV/PM Uses speed references *d1-01 to d1-08* to set a multi-step speed reference.

Note:
Refer to *Speed Selection Using Digital Inputs (b1-01 = 0) on page 170* for more information.

■ 5: Multi-Step Speed Reference 3

Setting Value	Function	Description
5	Multi-Step Speed Reference 3	V/f OLV CLV CLV/PM Uses speed references *d1-01 to d1-08* to set a multi-step speed reference.

Note:
Refer to *Speed Selection Using Digital Inputs (b1-01 = 0) on page 170* for more information.

■ 6: Jog Reference Selection

Setting Value	Function	Description
6	Jog Reference Selection	V/f OLV CLV CLV/PM Sets the drive to use the JOG Frequency Reference (JOG command). When *b1-01 ≠ 1 [Speed Reference Selection 1 ≠ Analog Input]* and *d1-18 = 0 or 3 [Speed Reference Selection Mode = Multi-speed Mode1 (d1-01 to 08) or Multi-speed Mode2 (d1-02 to 08)]*, the JOG Frequency Reference (JOG command) can be used.

When *b1-01 ≠ 1*, the JOG Frequency Reference (JOG command) will be activated every time an input terminal set for *H1-xx = 6* closes.

Note:
When *d1-18 = 1 or 2 [High speed has priority or Leveling speed has priority]*, the JOG Frequency Reference (JOG command) is disabled.

Table 12.22 Speed Reference Priority and Jog Frequency Reference

d1-18 Setting	Jog Frequency Reference
0	Jog Frequency Reference (JOG command) has priority over multi-speed references, and the speed set in *d1-26 [Leveling Speed]* is used for the JOG Frequency Reference (JOG command).
1	JOG Frequency Reference (JOG command) cannot be used.
2	JOG Frequency Reference (JOG command) cannot be used.
3	Jog Frequency Reference (JOG command) has priority over multi-speed references, and the speed set in *d1-26* is used for the JOG Frequency Reference (JOG command).

■ 7: Accel/Decel Ramp Selection 1

Setting Value	Function	Description
7	Accel/Decel Ramp Selection 1	V/f OLV CLV CLV/PM Sets the drive to use *Acceleration/Deceleration Ramp 1 [C1-01, C1-02]* or *Acceleration/Deceleration Ramp 2 [C1-03, C1-04]*.

Note:
Refer to *C1: Accel & Decel Ramp on page 534* for more information.

■ 8: Baseblock Command (N.O.)

Setting Value	Function	Description
8	Baseblock Command (N. O.)	V/f OLV CLV CLV/PM Sets the command that stops drive output and coasts the motor to stop when the input is ON.

⚠ WARNING Sudden Equipment Movement Hazard
When you use a Safe Disable signal or Baseblock command with the drive in a lifting application, you must close the holding brake if an input terminal triggers the Safe Disable signal or Baseblock command to stop drive output. Set the holding brake and input the Safe Disable signal or Baseblock command to isolate the drive output before you make sure that the holding brake is closed.
If you do not test the holding brake before you operate the drive, it can cause death or serious injury from a sudden coasting motor or falling or slipping of the load when you input the Safe Disable signal or Baseblock command.

⚠ WARNING Incorrect Operation
Yaskawa recommends that you use *H1-xx = 9 [Baseblock Command (N.C.)]*.
If a circuit error occurs in the MFDI, the drive cannot stop the output when the terminal set to *H1-xx = 8 [Baseblock Command (N.O.)]* turns ON.

The keypad flashes *bb [Baseblock]*.

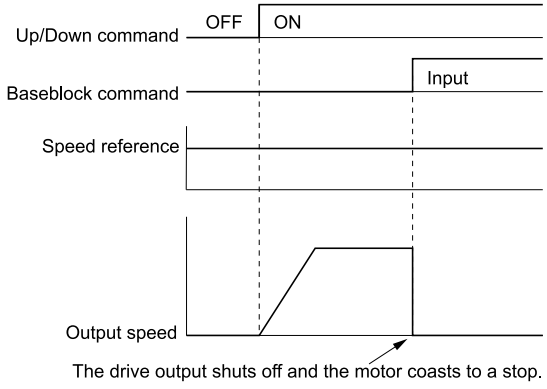

Figure 12.23 Baseblock Command Time Chart

ON : Baseblock (drive output stop)
OFF : Normal operation

■ 9: Baseblock Command (N.C.)

Setting Value	Function	Description
9	Baseblock Command (N. C.)	V/f OLV CLV CLV/PM Sets the command that stops drive output and coasts the motor to stop when the input terminal is OFF.

The keypad flashes *bb [Baseblock]*.

ON : Normal operation

OFF : Baseblock (drive output stop)

⚠ WARNING Sudden Equipment Movement Hazard

When you use a Safe Disable signal or Baseblock command with the drive in a lifting application, you must close the holding brake if an input terminal triggers the Safe Disable signal or Baseblock command to stop drive output. Set the holding brake and input the Safe Disable signal or Baseblock command to isolate the drive output before you make sure that the holding brake is closed.

If you do not test the holding brake before you operate the drive, it can cause death or serious injury from a sudden coasting motor or falling or slipping of the load when you input the Safe Disable signal or Baseblock command.

■ F: Not Used

Setting Value	Function	Description
F	Not Used	V/f OLV CLV CLV/PM Use this setting for unused terminals or to use terminals in through mode.

Through Mode uses the signal input to the terminal as a digital input for the upper sequence through a communication option or MEMOBUS/Modbus communications. This input signal does not have an effect on drive operation.

■ 14: Fault Reset

Setting Value	Function	Description
14	Fault Reset	V/f OLV CLV CLV/PM Sets the command to reset the current fault when the Up/Down command is inactive.

If the drive detects a fault, the drive will activate the fault relay output, turn off the output, and the motor will coast to stop.

If the drive detects a fault for which you can set the stopping method, apply the appropriate Stopping Method. Then push (RESET) on the keypad to turn the Up/Down command OFF, or activate the fault reset terminal to reset the fault.

Note:

The drive ignores the fault reset command when the Up/Down command is active. Remove the Up/Down command before you try to reset a fault.

■ 15: Emergency Stop (N.O.)

Setting Value	Function	Description
15	Emergency Stop (N.O.)	V/f OLV CLV CLV/PM Sets the command to ramp to stop in the deceleration ramp set in *C1-09 [Emergency Stop Ramp]* when the input terminal is ON while the drive is operating.

⚠ WARNING Incorrect Operation

Yaskawa recommends that you use *H1-xx = 17 [Emergency Stop (N.C.)]*.

If a circuit error occurs in the MFDI, the drive cannot stop the output when the terminal set to *H1-xx = 15 [Emergency Stop (N.O.)]* turns ON.

If you cancel the emergency stop input, the drive will not restart the motor until you:

- Fully stop the motor
- Cancel the Up/Down command
- Cancel the Emergency Stop command

Note:

- To use the N.C. switch to input the Emergency Stop command, set *H1-xx = 17 [Emergency Stop (N.C.)]*.
- Refer to *C1-09: Emergency Stop Ramp on page 537* for more information.
- Set *C1-09 [Emergency Stop Ramp]* to a correct deceleration ramp. If the deceleration ramp is too fast, it can cause an overvoltage fault, which will not stop the motor from coasting.

■ 16: Motor 2 Selection

Setting Value	Function	Description
16	Motor 2 Selection	V/f OLV CLV CLV/PM Sets the command for the drive to operate motor 1 or motor 2. Stop the motors before switching.

You can use an external input to switch operation between two induction motors. The drive will save the control methods, V/f patterns, and motor parameters for the two motors.

ON : Selects motor 2

OFF : Selects motor 1

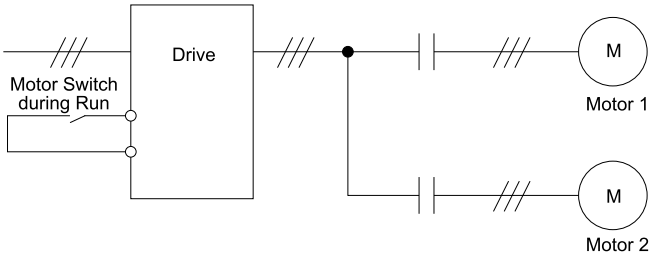

When you select motor 2, the drive will switch to motor 2 parameters.

Table 12.23 Parameters that Switch between Motor 1 and Motor 2

Parameter	Motor 2 Selection	
	OFF (Motor 1)	ON (Motor 2)
C1-xx [Accel & Decel Ramp]	C1-01 to C1-04	C1-12, C1-13
E1-xx, E3-xx [V/f Patterns] E2-xx, E4-xx [Motor Parameters]	E1-xx, E2-xx	E3-xx, E4-xx

Note:
- You can use only *A1-02 = 0 [Control Method Selection = V/f Control]* as the control method for motor 2.
- You can also use *d1-27 [Motor 2 Speed Reference]* to operate motor 1 in V/f Control. Refer to *Motor Switch Selection on page 554* for more information.
- When you use two motors, the drive applies the protective function set in *L1-01 [Motor Overload (oL1) Protection]* to motor 1 and motor 2.
- You cannot switch between motors 1 and 2 during run. If you try to switch motors when they are running, it will cause a *rUn [Motor Switch during Run]* error.
- When you switch from motor 1 to motor 2, make sure that motor 2 is operating.
- When *A1-02 = 7 [CLV/PM]*, you cannot switch between motors.

■ 17: Emergency Stop (N.C.)

Setting Value	Function	Description
17	Emergency Stop (N.C.)	V/f OLV CLV CLV/PM Sets the command to ramp to stop in the deceleration ramp set in *C1-09 [Emergency Stop Ramp]* when the input terminal is ON while the drive is operating.

If you cancel the emergency stop input, the drive will not restart the motor until you:

- Fully stop the motor
- Cancel the Up/Down command
- Cancel the Emergency Stop command

Note:
- To use the N.O. switch to input the Emergency Stop command, set H1-xx = 15 [Emergency Stop (N.O.)].
- Refer to *C1-09: Emergency Stop Ramp on page 537* for more information.
- Set *C1-09 [Emergency Stop Ramp]* to a correct deceleration ramp. If the deceleration ramp is too fast, it can cause an overvoltage fault, which will not stop the motor from coasting.

Figure 12.24 shows an example of how emergency stop operates.

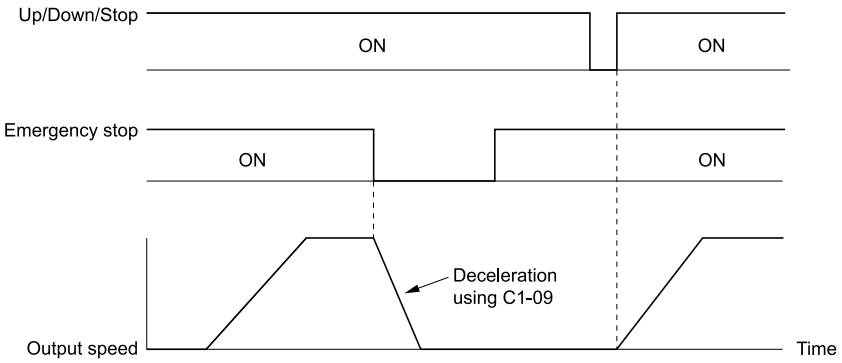

Figure 12.24 Emergency Stop Time Chart

■ 18: Timer Function

Setting Value	Function	Description
18	Timer Function	V/f OLV CLV CLV/PM Sets the command to start the timer function. Use this setting with *Timer Output [H2-xx = 12]*.

Note:
Refer to *b4: Timer Function on page 528* for more information.

■ 1A: Accel/Decel Ramp Selection 2

Setting Value	Function	Description
1A	Accel/Decel Ramp Selection 2	V/f OLV CLV CLV/PM Sets the drive to use *Acceleration/Deceleration Ramp 3 [C1-05, C1-06]* or *Acceleration/Deceleration Ramp 4 [C1-07, C1-08]*. Set this function and *H1-xx = 7 [Accel/Decel Ramp Selection 1]* together.

Note:
Refer to *C1: Accel & Decel Ramp on page 534* for more information.

■ 20 to 2F: External Fault

Setting Value	Function	Description
20 to 2F	External Fault	V/f OLV CLV CLV/PM Sets a command to stop the drive when a failure or fault occurs on an external device.

⚠ WARNING Incorrect Operation

Yaskawa recommends that you use *H1-xx = 21, 23, 25, 27, 29, 2B, 2D, 2F [External Fault (N.C.)]*. If a circuit error occurs in the MFDI, the drive cannot stop the output when the terminal set to *H1-xx = 20, 22, 24, 26, 28, 2A, 2C, 2E [External Fault (N.O.)]* turns ON.

If an external fault is input to the drive, the keypad will show *EFx [External Fault (Terminal Sx)]*, where x is the number of the terminal (terminal Sx) to which the external fault signal is assigned. For example, when an external fault signal is input to terminal S3, the keypad will show *EF3 [External Fault (Terminal S3)]*.

Use these conditions to select the value to set in *H1-xx*:

- Signal input method from peripheral devices
- External fault detection method
- Motor stopping method (operation after external fault detection)

Table 12.24 shows the relation between the conditions and the value set to *H1-xx*.

Table 12.24 Stopping Methods for External Fault

Setting	Signal Input Method from Peripheral Devices *1		External Fault Detection Method *2		Stopping Method			
	N.O.	N.C.	Always Detected	Detected during RUN Only	Ramp to Stop (Fault)	Coast to Stop (Fault)	Emergency Stop (Fault)	Continuous Operation (Alarm Only)
20	x	-	x	-	x	-	-	-
21	-	x	x	-	x	-	-	-
22	x	-	-	x	x	-	-	-
23	-	x	-	x	x	-	-	-

Setting	Signal Input Method from Peripheral Devices *1		External Fault Detection Method *2		Stopping Method			
	N.O.	N.C.	Always Detected	Detected during RUN Only	Ramp to Stop (Fault)	Coast to Stop (Fault)	Emergency Stop (Fault)	Continuous Operation (Alarm Only)
24	x	-	x	-	-	x	-	-
25	-	x	x	-	-	x	-	-
26	x	-	-	x	-	x	-	-
27	-	x	-	x	-	x	-	-
28	x	-	x	-	-	-	x	-
29	-	x	x	-	-	-	x	-
2A	x	-	-	x	-	-	x	-
2B	-	x	-	x	-	-	x	-
2C	x	-	x	-	-	-	-	x
2D	-	x	x	-	-	-	-	x
2E	x	-	-	x	-	-	-	x
2F	-	x	-	x	-	-	-	x

*1 Set the terminal to N.O. (detects external fault when switched ON) or N.C. (detects external fault when switched OFF).
*2 Set the drive to always detect each fault or to detect only during run.

■ 30: Creep Cancel

Setting Value	Function	Description
30	Creep Cancel	V/f OLV CLV CLV/PM Sets the command to cancel the creep operation when the terminal is OFF.

ON : The drive continues the creep operation.
OFF : The drive cancels the creep operation (N.C.).

Refer to *Stop Distance Control on page 698* for more information.

■ 40: Up Command

Setting Value	Function	Description
40 Expert	Up Command	V/f OLV CLV CLV/PM Sets the Up command for 2-wire sequence 1. Set this function and *H1-xx = 41 [Down Command]* together.

ON : Upward operation
OFF : Stop

Note:
- If you turn ON the Up command terminal and the Down command terminal, it will cause an *EF [Up/Down Command Input Error]* alarm and the motor will ramp to stop.
- Initialize the drive with a 2-wire sequence to set the Up command to terminal S1.

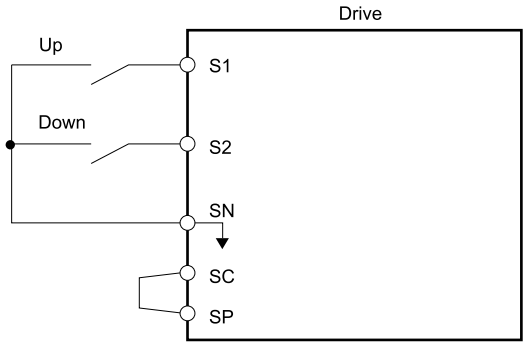

Figure 12.25 2-Wire Sequence Wiring Example

■ 41: Down Command

Setting Value	Function	Description
41 Expert	Down Command	V/f OLV CLV CLV/PM Sets the Down command for 2-wire sequence 1. Set this function and *H1-xx = 40 [Up Command]* together.

ON : Downward operation

OFF : Stop

Note:

- If you turn ON the Up command terminal and the Down command terminal, it will cause an *EF [Up/Down Command Input Error]* alarm and the motor will ramp to stop.
- Initialize the drive with a 2-wire sequence to set the Down command to terminal S2.

■ 4B: Short Circuit MCFeedback (NO)

Setting Value	Function	Description
4B	Short Circuit MCFeedback (NO)	V/f OLV CLV CLV/PM Sets the command to detect that the motor does not have a short circuit when the terminal is ON.

ON : The motor does not have a short circuit.

OFF : The motor has a short circuit.

Refer to *Short Circuit Brake Sequence on page 203* for more information.

■ 4C: Short Circuit MCFeedback (NC)

Setting Value	Function	Description
4C	Short Circuit MCFeedback (NC)	V/f OLV CLV CLV/PM Sets the command to detect that the motor does not have a short circuit when the terminal is OFF.

ON : The motor has a short circuit.

OFF : The motor does not have a short circuit.

Refer to *Short Circuit Brake Sequence on page 203* for more information.

■ 50: Nominal Speed

Setting Value	Function	Description
50	Nominal Speed	V/f OLV CLV CLV/PM Sets the command to operate at the speed reference set in *d1-19 [Nominal Speed]* when the terminal is ON.

Note:

The operation conditions change when the *d1-18 [Speed Reference Selection Mode]* setting changes.

Refer to *Separate Speed Inputs (d1-18 = 1 or 2) on page 171* for more information.

■ 51: Intermediate Speed

Setting Value	Function	Description
51	Intermediate Speed	V/f OLV CLV CLV/PM Sets the command to operate at the speed reference set in *d1-20 [Intermediate Speed 1]* when the terminal is ON. Set this function, *50 [Nominal Speed]*, and *52 [Releveling Speed]* together to switch between the speed references set in *d1-21 [Intermediate Speed 2]* and *d1-22 [Intermediate Speed 3]*.

Note:

The operation conditions change when the *d1-18 [Speed Reference Selection Mode]* setting changes.

Refer to *Separate Speed Inputs (d1-18 = 1 or 2) on page 171* for more information.

■ 52: Releveling Speed

Setting Value	Function	Description
52	Releveling Speed	V/f OLV CLV CLV/PM Sets the command to operate at the speed reference set in *d1-23 [Releveling Speed]* when the terminal is ON.

Note:

The operation conditions change when the *d1-18 [Speed Reference Selection Mode]* setting changes.

Refer to *Separate Speed Inputs (d1-18 = 1 or 2) on page 171* for more information.

■ 53: Leveling Speed

Setting Value	Function	Description
53	Leveling Speed	V/f OLV CLV CLV/PM Sets the command to operate at the speed reference set in *d1-26 [Leveling Speed]* when the terminal is ON.

Note:
The operation conditions change when the *d1-18 [Speed Reference Selection Mode]* setting changes.

Refer to *Separate Speed Inputs (d1-18 = 1 or 2) on page 171* for more information.

■ 54: Inspection Operation

Setting Value	Function	Description
54	Inspection Operation	V/f OLV CLV CLV/PM Sets the command to operate at the speed reference set in *d1-24 [Inspection Operation Speed]* when the terminal is ON.

To use the Inspection Operation, this terminal must be activated before you enter the Up/Down command. Refer to *Inspection Operation on page 174* for more information.

■ 55: Rescue Operation

Setting Value	Function	Description
55	Rescue Operation	V/f OLV CLV CLV/PM Sets the command to start the Rescue Operation when the terminal is ON.

Refer to *Rescue Operation on page 183* for more information.

■ 56: Motor Contactor Feedback N.O.

Setting Value	Function	Description
56	Motor Contactor Feedback N.O.	V/f OLV CLV CLV/PM Sets the command to detect that the electromagnetic contactor is closed when the terminal is ON.

The drive uses this input signal to detect the status of output signal from an MFDO terminal set for *H2-xx = 51 [Output Contactor Control]*.

ON : The electromagnetic contactor is closed (N.O.).

OFF : The electromagnetic contactor is open.

■ 57: High Speed Limit Up

Setting Value	Function	Description
57	High Speed Limit Up	V/f OLV CLV CLV/PM Sets a command to limit the speed of the elevator car in the up direction to the leveling speed when the terminal is ON.

The drive applies no speed limit when the elevator car goes down.

■ 58: High Speed Limit Down

Setting Value	Function	Description
58	High Speed Limit Down	V/f OLV CLV CLV/PM Sets a command to limit the speed of the elevator car in the down direction to the leveling speed when the terminal is ON.

The drive applies no speed limit when the elevator car goes up.

■ 5A: Motor Contactor Feedback N.C.

Setting Value	Function	Description
5A	Motor Contactor Feedback N.C.	V/f OLV CLV CLV/PM Sets the command to detect that the electromagnetic contactor is closed when the terminal is OFF.

The drive uses this input signal to detect the status of output signal from an MFDO terminal set for *H2-xx = 51 [Output Contactor Control]*.

ON : The electromagnetic contactor is open.

OFF : The electromagnetic contactor is closed (N.C.).

■ 5B: Brake Feedback N.C.

Setting Value	Function	Description
5B	Brake Feedback N.C.	V/f OLV CLV CLV/PM Sets the command to detect that the brake is released when the terminal is OFF.

The drive uses this input signal to examine the brake operation when an MFDO terminal set for *H2-xx = 50 [Brake Control]* is activated.

ON : The brake is applied.

OFF : The brake is released (N.C.).

■ 5C: Stop Distance Correction

Setting Value	Function	Description
5C	Stop Distance Correction	V/f OLV CLV CLV/PM Sets the command to compensate the stopping distance to improve the landing accuracy when the terminal is ON.

When *S5-10 = 1 [Leveling Stop Method Selection = Direct Landing]* and this terminal is activated, the drive will stop the elevator car at the designated floor with greater accuracy. Refer to *Stop Distance Control on page 698* for more information.

■ 5D: Brake Trq Req

Setting Value	Function	Description
5D	Brake Trq Req	V/f OLV CLV CLV/PM Sets the command to switch the drive operation from normal operation to the Brake Torque Check Mode when the terminal is ON.

When the Up/Down command is turned ON while this input terminal is activated during zero-speed detection, the drive starts the Brake Torque Check.

Note:

You cannot set this function for *H1-21 [Terminal S1 Function Select 2]* to *H1-30 [Terminal S10 Function Select 2]*.

ON : The drive requests to start the Brake Torque Check.

OFF : The drive operates normally.

Refer to *Brake Torque Check Function on page 179* for more information.

■ 67: Communications Test Mode

Setting Value	Function	Description
67	Communications Test Mode	V/f OLV CLV CLV/PM Sets the function for the drive to self-test RS-485 serial communications operation.

The Self-Diagnostics function connects the transmission terminal of the control terminal block to the reception terminal. The function transmits the data that the drive sent to make sure that the drive can communicate correctly.

Note:

Refer to *Self-Diagnostics on page 275* for the self-diagnostics procedure.

■ 79: Brake Feedback N.O.

Setting Value	Function	Description
79	Brake Feedback N.O.	V/f OLV CLV CLV/PM Sets the command to detect that the brake is released when the terminal is ON.

The drive uses this input signal to examine the brake operation when an MFDO terminal set for *H2-xx = 50 [Brake Control]* is activated.

ON : The brake is released (N.O.).

OFF : The brake is applied.

■ BA: Landing Zone

Setting Value	Function	Description
BA	Landing Zone	V/f OLV CLV CLV/PM Sets the command to deactivate all pending speed selections (speed reference = 0 Hz), and start the brake sequence after deceleration is complete.

Note:

You cannot use this function in these conditions:
- When you select motor 2 while *d1-27 [Motor 2 Speed Reference] ≠ 0*
- During Inspection Operation
- During Rescue Operation
- During Light Load Direction Search

■ BB: Standby

Setting Value	Function	Description
BB	Standby	V/f OLV CLV CLV/PM Sets the command to activate the digital output from the MFDO terminal set for *H2-xx = 65 or 165 [Standby Output or ! Standby Output]* to move on to Standby Mode when the terminal is ON.

Note:

When you use this function, also set *H2-xx = 65 or 165* for an MFDO terminal. If you do not set any MFDO terminals, the drive detects *oPE08 [Parameter Selection Error]*.

ON : The drive moves on Standby Mode.

OFF : The drive operates normally.

Refer to *b8: Energy Saving on page 531* for more information about Standby Mode.

■ BC: Wake Up

Setting Value	Function	Description
BC	Wake Up	V/f OLV CLV CLV/PM Sets the command to return the drive operation from the Standby Mode and deactivate the digital output from the MFDO terminal set for *H2-xx = 65 or 165 [Standby Output or !Standby Output]* when the terminal is ON. When the drive is not in Standby Mode, the drive will ignore this command.

Note:

You can set this function for *H1-21 [Terminal S1 Function Select 2]* to *H1-30 [Terminal S10 Function Select 2]*.

ON : The drive returns from Standby Mode.

Refer to *b8: Energy Saving on page 531* for more information about Standby Mode.

■ 103 to 1BC: Inverse Inputs of 3 to BC

Setting Value	Function	Description
103 to 1BC	Inverse Inputs of 3 to BC	Sets the function of the selected MFDI to operate inversely. To select the function, enter "1xx", where the "xx" is the function setting value.

For example, to use the inverse input of *3 [Multi-Step Speed Reference 1]*, set *H1-xx = 103*.

Note:

You cannot use inverse input for all functions. Refer to Table 12.21 for more information.

◆ H2: Digital Outputs

H2 parameters set the MFDO terminal functions.

■ H2-01 to H2-05 Terminal M1-M2, M3-M4, M5-M6, P1-C1, P2-C2 Function Selection

The drive has five MFDO terminals. Table 12.25 shows the default function settings for the terminals.

Table 12.25 MFDO Terminals Default Function Settings

No.	Name	Default	Function
H2-01	Term M1-M2 Function Selection	50	Brake Control
H2-02	Term M3-M4 Function Selection	Determined by d1-18	**1*
H2-03	Term M5-M6 Function Selection	6	Drive Ready
H2-04	Term P1-C1 Function Selection	37	During Frequency Output
H2-05	Term P2-C2 Function Selection	F	Not Used

*1 The drive default function set for terminals M3-M4 change when the *d1-18 [Speed Reference Selection Mode]* setting changes:
- When *d1-18 ≠ 4 [Smart Replacement]*, the default setting is *51 [Output Contactor Control]*.
- When *d1-18 = 4*, the default setting is *74 [Slow Down]*.

Refer to Table 12.26 to set *H2-xx [MFDO Function Selection]*.

Table 12.26 MFDO Setting Values

Setting Value	Function	Ref.
0	During Run	605
1	Zero Speed	605
2	Speed Agree 1	606
3	User-Set Speed Agree 1	606
4	Speed Detection 1	607
5	Speed Detection 2	607
6	Drive Ready	608
7	DC Bus Undervoltage	608
8 *1	During Baseblock (N.O.)	608
9	Speed Reference from Keypad	608
A	Up/Down Command Source	608
B	Torque Detection 1 (N.O.)	609
E	Fault	609
F *1	Not Used	609
10	Alarm	609
11	Fault Reset Command Active	609
12	Timer Output	609
13	Speed Agree 2	609
14	User-Set Speed Agree 2	610
15	Speed Detection 3	610
16	Speed Detection 4	611
18	Torque Detection 2 (N.O.)	611
1A	During Down Direction	611
1B *1	During Baseblock (N.C.)	612
1C	Motor 2 Selected	612
1E	Reset Enabled	612
1F	Motor Overload Alarm (oL1)	612
20	Drive Overheat Pre-Alarm (oH)	612
21	Safe Torque OFF	613
2F	Maintenance Notification	613
30	During Torque Limit	613
33	Zero Servo Complete	613
37	During Frequency Output	613
47	PF Detected	614
4E	Braking Transistor Fault (rr)	614
50	Brake Control	614
51	Output Contactor Control	614
52	Door Zone	614
54	Light Load Direction	614
55	Light Load Detection Active	615
58	Safe Disable Active	615
5C	Motor Current Monitor	615
5D	During Brake Torque Check	615
5E	Brake Torque Check Complete	615
60	Internal Cooling Fan Failure	615
61	Pole Position Detection Complete	616
65	Standby Output	616
69	External Power 24V Supply	617
6A	Data Logger Error	617
74	Slow Down	617
75	TDCC Pulse Output	617
76	TDCC Alarm Level Reached	617
77	TDCC Fault Level Reached	618
78	Short Circuit Brake Release	618
7A	During Up Direction	618
100 to 17A	Inverse Outputs of 0 to 7A Sets an inverse output of the function for the MFDO. Put a 1 at the front of the function setting to set inverse output. For example, set *133* for inverse output of *33 [Zero Servo Complete]*.	618

*1 Inverse output is not available.

■ H2-01: Term M1-M2 Function Selection

No. (Hex.)	Name	Description	Default (Range)
H2-01 (040B)	Term M1-M2 Function Selection	V/f OLV CLV CLV/PM Sets the function for MFDO terminal M1-M2.	50 (0 - 1FF)

Note:

When you do not use the terminal or when you use the terminal in through mode, set this parameter to *F [Not Used]*.

■ H2-02: Term M3-M4 Function Selection

No. (Hex.)	Name	Description	Default (Range)
H2-02 (040C)	Term M3-M4 Function Selection	V/f OLV CLV CLV/PM Sets the function for MFDO terminal M3-M4.	51 (0 - 1FF)

Note:
- The default setting changes when *d1-18 [Speed Reference Selection Mode]* changes:
  – When *d1-18 ≠ 4 [Smart Replacement]*, the default function setting is *51 [Output Contactor Control]*.
  – When *d1-18 = 4*, the default function setting is *74 [Slow Down]*.
- When you do not use the terminal or when you use the terminal in through mode, set this parameter to *F [Not Used]*.

■ H2-03: Term M5-M6 Function Selection

No. (Hex.)	Name	Description	Default (Range)
H2-03 (040D)	Term M5-M6 Function Selection	V/f OLV CLV CLV/PM Sets the function for MFDO terminal M5-M6.	6 (0 - 1FF)

Note:
When you do not use the terminal or when you use the terminal in through mode, set this parameter to *F [Not Used]*.

■ H2-04: Term P1-C1 Function Selection

No. (Hex.)	Name	Description	Default (Range)
H2-04 (040E)	Term P1-C1 Function Selection	V/f OLV CLV CLV/PM Sets the function for MFDO terminal P1-C1.	37 (0 - 1FF)

Note:
When you do not use the terminal or when you use the terminal in through mode, set this parameter to *F [Not Used]*.

■ H2-05: Term P2-C2 Function Selection

No. (Hex.)	Name	Description	Default (Range)
H2-05 (040F)	Term P2-C2 Function Selection	V/f OLV CLV CLV/PM Sets the function for MFDO terminal P2-C2.	F (0 - 1FF)

Note:
When you do not use the terminal or when you use the terminal in through mode, set this parameter to *F [Not Used]*.

◆ MFDO Setting Values

Selects the function configured to MFDO.

■ 0: During Run

Setting Value	Function	Description
0	During Run	V/f OLV CLV CLV/PM The terminal activates when you input an Up/Down command and when the drive is outputting voltage.

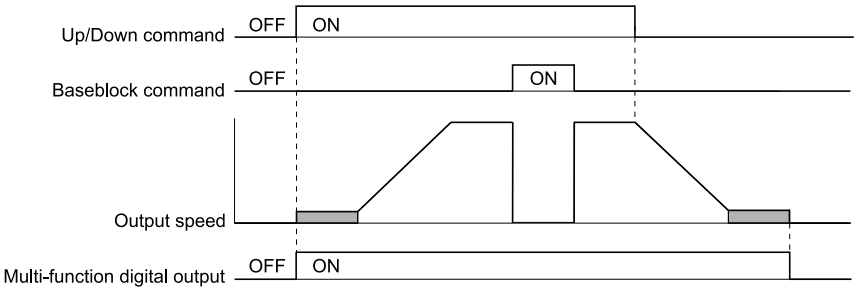

Figure 12.26 Drive Running Time Chart

ON : Drive is running

The drive is receiving an Up/Down command or outputting voltage.

OFF : Drive is stopping

■ 1: Zero Speed

Setting Value	Function	Description
1	Zero Speed	V/f OLV CLV CLV/PM The terminal activates when the output speed < *E1-09 [Minimum Output Frequency] or S1-01 [Zero Speed Level at Stop]*.

Note:
Parameter *A1-02 [Control Method Selection]* selects which parameter is the reference.

A1-02 Setting	Control Method Selection	Parameter Used as the Reference
0	V/f	*E1-09*
2	OLV	*E1-09*
3	CLV	*S1-01*
7	CLV/PM	*S1-01*

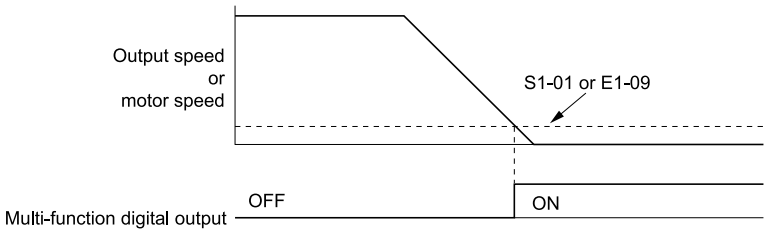

Figure 12.27 Zero Speed Time Chart

ON : Output speed < value of *E1-09* or *S1-01*.
OFF : Output speed ≥ value of *E1-09* or *S1-01*.

■ 2: Speed Agree 1

Setting Value	Function	Description
2	Speed Agree 1	V/f OLV CLV CLV/PM The terminal activates when the output speed is in the range of the speed reference ± *L4-02 [Speed Agree Detection Width]*.

Note:
- The detection function operates in the two motor rotation directions.
- The drive outputs the motor speed status when *A1-02 = 3, 7 [Control Method Selection = CLV, CLV/PM]*.

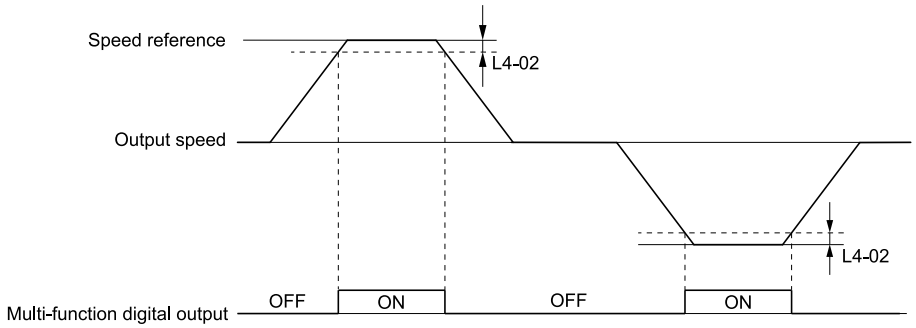

Figure 12.28 Speed Agree 1 Time Chart

ON : The output speed is in the range of "speed reference ± *L4-02*".
OFF : The output speed does not align with the speed reference although the drive is running.

■ 3: User-Set Speed Agree 1

Setting Value	Function	Description
3	User-Set Speed Agree 1	V/f OLV CLV CLV/PM The terminal activates when the output speed is in the range of *L4-01 [Speed Agree Detection Level]* ± *L4-02 [Speed Agree Detection Width]* and in the range of the speed reference ± *L4-02*.

Note:
- The detection function operates in the two motor rotation directions. The drive uses the *L4-01* value as the Up/Down detection level.
- The drive outputs the motor speed status when *A1-02 = 3, 7 [Control Method Selection = CLV, CLV/PM]*.

ON : The output speed is in the range of "*L4-01* ± *L4-02*" and the range of speed reference ± *L4-02*.
OFF : The output speed is not in the range of "*L4-01* ± *L4-02*" or the range of speed reference ± *L4-02*.

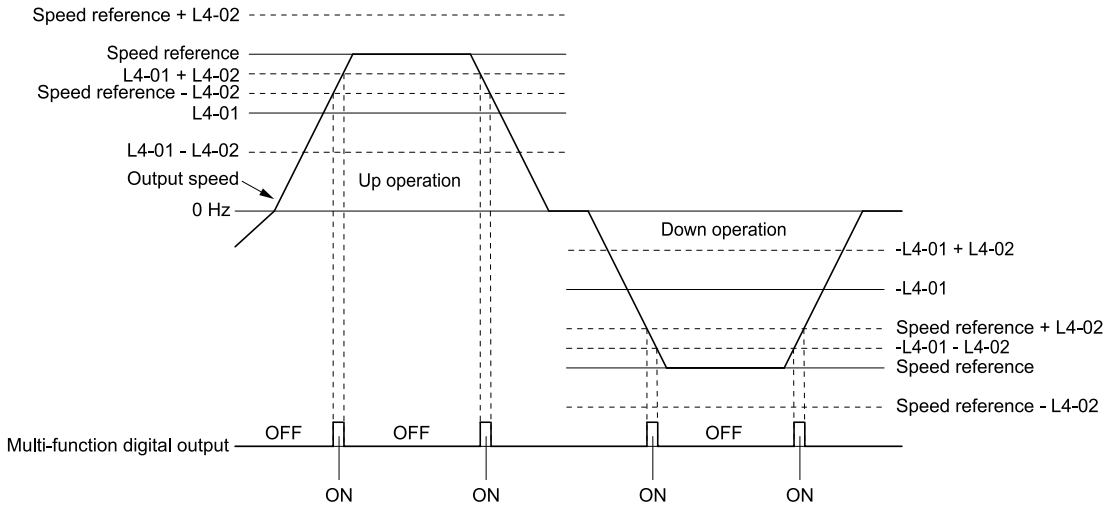

Figure 12.29 User-Set Speed Agree 1 Time Chart

■ 4: Speed Detection 1

Setting Value	Function	Description
4	Speed Detection 1	V/f OLV CLV CLV/PM The terminal deactivates when the output speed > "*L4-01 [Speed Agree Detection Level] + L4-02 [Speed Agree Detection Width]*". After the terminal deactivates, the terminal stays deactivated until the output speed is at the value of *L4-01*.

Note:
- The detection function operates in the two motor rotation directions. The drive uses the *L4-01* value as the Up/Down detection level.
- The drive outputs the motor speed status when *A1-02 = 3, 7 [Control Method Selection = CLV, CLV/PM]*.

ON : The output speed < *L4-01*, or the output speed ≤ "*L4-01 + L4-02*"

OFF : The output speed > "*L4-01 + L4-02*"

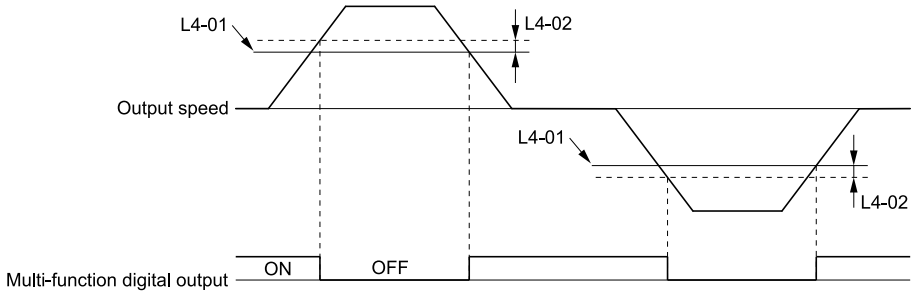

Figure 12.30 Speed Detection 1 Time Chart

Note:
Figure 12.30 shows the result of the configuration when *L4-07 = 1 [Speed Agree Detection Selection = Detection Always Enabled]*. The default setting of *L4-07* is *0 [No Detection during Baseblock]*. When the speed agreement detection selection is "No Detection during Baseblock", the terminal is deactivated when the drive output stops.

■ 5: Speed Detection 2

Setting Value	Function	Description
5	Speed Detection 2	V/f OLV CLV CLV/PM The terminal activates when the output speed > *L4-01 [Speed Agree Detection Level]*. After the terminal activates, the terminal stays activated until the output speed is at the value of "*L4-01 - L4-02*".

Note:
- The detection function operates in the two motor rotation directions. The drive uses the *L4-01* value as the Up/Down detection level.
- The drive outputs the motor speed status when *A1-02 = 3, 7 [Control Method Selection = CLV, CLV/PM]*.

ON : The output speed > *L4-01*

OFF : The output speed < "*L4-01 - L4-02*", or the output speed ≤ *L4-01*

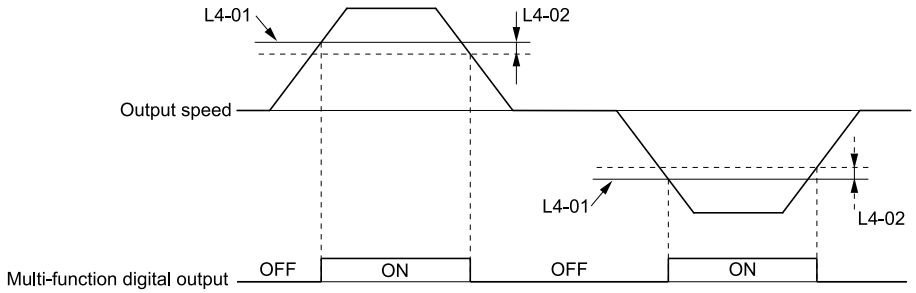

Figure 12.31 Speed Detection 2 Time Chart

■ 6: Drive Ready

Setting Value	Function	Description
6	Drive Ready	V/f OLV CLV CLV/PM The terminal activates when the drive is ready and running.

The terminal deactivates in these conditions:

- When the power supply is OFF
- During a fault
- When there is problem with the control power supply
- When there is a parameter setting error and the drive cannot operate although there is an Up/Down command
- When you enter an Up/Down command and it immediately triggers an overvoltage or undervoltage fault because the drive has an overvoltage or undervoltage fault during stop
- When the drive is in Programming Mode and will not accept an Up/Down command
- When the Safe Disable function is active

■ 7: DC Bus Undervoltage

Setting Value	Function	Description
7	DC Bus Undervoltage	V/f OLV CLV CLV/PM The terminal activates when the DC bus voltage or control circuit power supply is at the voltage set in *L2-05 [Undervoltage Detection Lvl (Uv1)]* or less. The terminal also activates when there is a fault with the DC bus voltage.

ON : The DC bus voltage ≤ *L2-05*

OFF : The DC bus voltage > *L2-05*

■ 8: During Baseblock (N.O.)

Setting Value	Function	Description
8	During Baseblock (N.O.)	V/f OLV CLV CLV/PM The terminal activates during baseblock. When the drive is in baseblock, the drive output transistor stops switching and does not make DC bus voltage.

ON : During baseblock

OFF : The drive is not in baseblock.

■ 9: Speed Reference from Keypad

Setting Value	Function	Description
9	Speed Reference from Keypad	V/f OLV CLV CLV/PM Shows the selected speed reference source.

ON : The keypad is the speed reference source.

OFF : Parameter *b1-01 [Speed Reference Selection 1]* is the speed reference source.

■ A: Up/Down Command Source

Setting Value	Function	Description
A	Up/Down Command Source	V/f OLV CLV CLV/PM Shows the selected Up/Down command source.

ON : The keypad is the Up/Down command source.

OFF : Parameter *b1-02 [Up/Down Command Selection 1]* is the Up/Down command source.

■ B: Torque Detection 1 (N.O.)

Setting Value	Function	Description
B	Torque Detection 1 (N.O.)	V/f OLV CLV CLV/PM The terminal activates when the drive detects overtorque or undertorque.

ON : The output current/torque > *L6-02 [Torque Detection Level 1]*, or the output current/torque < *L6-02* for longer than the time set in *L6-03 [Torque Detection Time 1]*.

Note:
- When *L6-01 = 5, 6, 7, or 8 [Torque Detection Selection 1 = UL @ Speed Agree - Alarm only, UL @ RUN - Alarm only, UL @ Speed Agree - Fault, or UL @ RUN - Fault]*, the drive will detect when the output current/torque is less than *L6-02* for longer than *L6-03*.
- Refer to *L6: Torque Detection on page 642* for more information.

■ E: Fault

Setting Value	Function	Description
E	Fault	V/f OLV CLV CLV/PM The terminal activates when the drive detects a fault.

Note:
The terminal will not activate for *CPF00* and *CPF01 [Control Circuit Error]* faults.

■ F: Not Used

Setting Value	Function	Description
F	Not Used	V/f OLV CLV CLV/PM Use this setting for unused terminals or to use terminals in through mode. Also use this setting as the PLC contact output via MEMOBUS/Modbus or the communication option. This signal does not function if you do not configure signals from the PLC.

■ 10: Alarm

Setting Value	Function	Description
10	Alarm	V/f OLV CLV CLV/PM The terminal activates when the drive detects a minor fault.

■ 11: Fault Reset Command Active

Setting Value	Function	Description
11	Fault Reset Command Active	V/f OLV CLV CLV/PM The terminal activates when the drive receives the Reset command from the control circuit terminal, serial communications, or the communication option.

■ 12: Timer Output

Setting Value	Function	Description
12	Timer Output	V/f OLV CLV CLV/PM Sets the terminal as the timer output. Use this setting with the timer input set in *H1-xx = 18 [MFDI Function Selection = Timer Function]*.

Note:
Refer to *Timer Function Operation on page 529* for more information.

■ 13: Speed Agree 2

Setting Value	Function	Description
13	Speed Agree 2	V/f OLV CLV CLV/PM The terminal activates when the output speed is in the range of the speed reference ± *L4-04 [Speed Agree Detection Width (+/-)]*.

Note:
- The detection function operates in the two motor rotation directions.
- The drive outputs the motor speed status when *A1-02 = 3, 7 [Control Method Selection = CLV, CLV/PM]*.

ON : The output speed is in the range of "speed reference ± *L4-04*".

OFF : The output speed is not in the range of "speed reference ± *L4-04*".

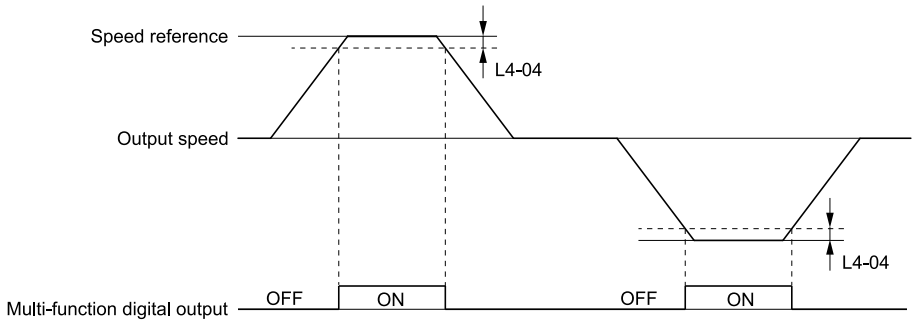

Figure 12.32 Speed Agree 2 Time Chart

■ 14: User-Set Speed Agree 2

Setting Value	Function	Description
14	User-Set Speed Agree 2	V/f OLV CLV CLV/PM The terminal activates when the output speed is in the range of *L4-03 [Speed Agree Detection Level (+/-)]* ± *L4-04 [Speed Agree Detection Width (+/-)]* and in the range of the speed reference ± *L4-04*.

Note:
- The detection level set in *L4-03* is a signed value. The drive will only detect in one direction.
- The drive outputs the motor speed status when *A1-02 = 3, 7 [Control Method Selection = CLV, CLV/PM]*.

ON : The output speed is in the range of "*L4-03* ± *L4-04*" and the range of speed reference ± *L4-04*.

OFF : The output speed is not in the range of "*L4-03* ± *L4-04*" or the range of speed reference ± *L4-04*.

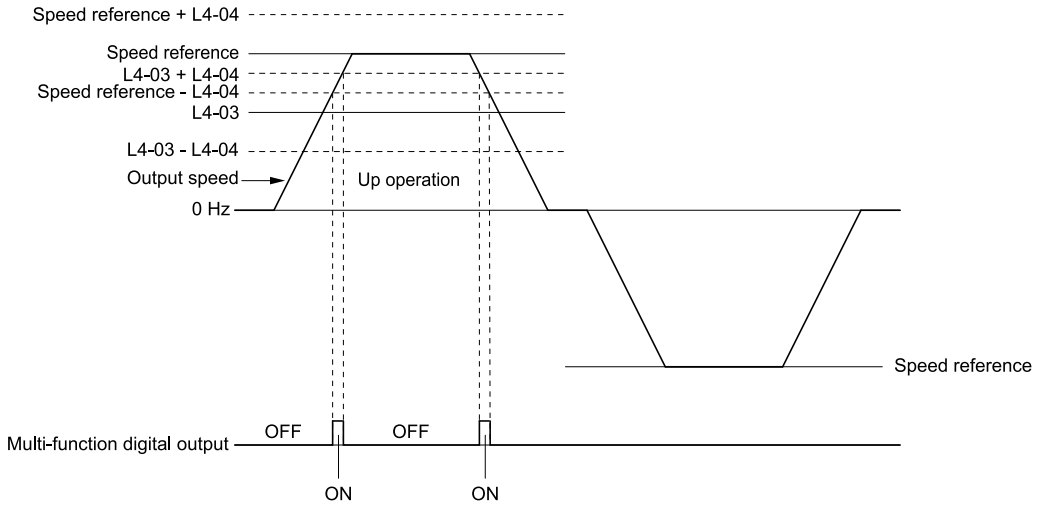

Figure 12.33 Example of User-Set Speed Agree 2 (L4-03 Is Positive)

■ 15: Speed Detection 3

Setting Value	Function	Description
15	Speed Detection 3	V/f OLV CLV CLV/PM The terminal deactivates when the output speed > "*L4-03 [Speed Agree Detection Level(+/-)]* + *L4-04 [Speed Agree Detection Width(+/-)]*". After the terminal deactivates, the terminal stays deactivated until the output speed is at the value of *L4-03*.

Note:
- The detection level set in *L4-03* is a signed value. The drive will only detect in one direction.
- The drive outputs the motor speed status when *A1-02 = 3, 7 [Control Method Selection = CLV, CLV/PM]*.

ON : The output speed < *L4-03*, or the output speed ≤ "*L4-03* + *L4-04*"

OFF : The output speed > "*L4-03* + *L4-04*"

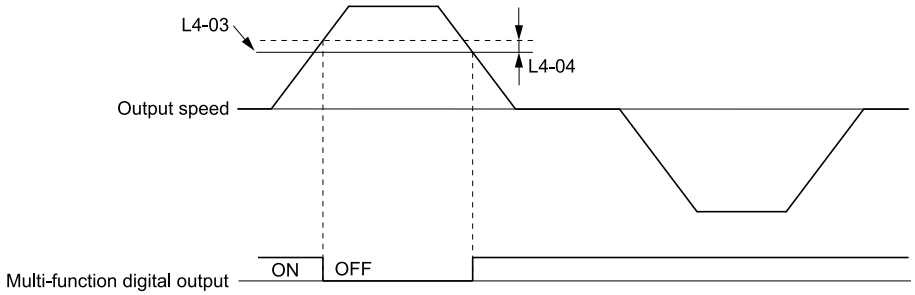

Figure 12.34 Example of Speed Detection 3 (Value of L4-03 Is Positive)

Note:

Figure 12.34 shows the time chart when *L4-07 = 1 [Speed Agree Detection Selection = Detection Always Enabled]*. The default setting of *L4-07* is *0 [No Detection during Baseblock]*. When the speed agreement detection selection is "No Detection during Baseblock", the terminal is deactivated when the drive output stops.

■ 16: Speed Detection 4

Setting Value	Function	Description
16	Speed Detection 4	V/f OLV CLV CLV/PM The terminal activates when the output speed > *L4-03 [Speed Agree Detection Level(+/-)]*. After the terminal activates, the terminal stays activated until the output speed is at the value of "*L4-03 - L4-04*".

Note:

- The detection level set in *L4-03* is a signed value. The drive will only detect in one direction.
- The drive outputs the motor speed status when *A1-02 = 3, 7 [Control Method Selection = CLV, CLV/PM]*.

ON : The output speed > *L4-03*

OFF : The output speed < "*L4-03 - L4-04*", or the output speed ≤ *L4-03*

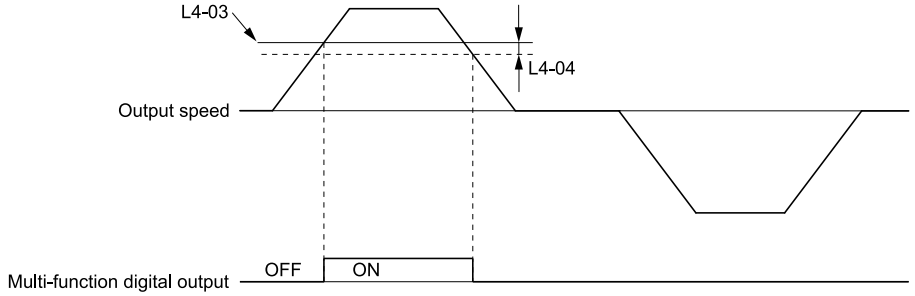

Figure 12.35 Example of Speed Detection 4 (Value of L4-03 Is Positive)

■ 18: Torque Detection 2 (N.O.)

Setting Value	Function	Description
18	Torque Detection 2 (N.O.)	V/f OLV CLV CLV/PM The terminal activates when the drive detects overtorque or undertorque.

Use the *L6 [Torque Detection]* parameters to set torque detection.

ON : The output current/torque > *L6-05 [Torque Detection Level 2]*, or the output current/torque < *L6-05* for longer than the time set in *L6-06 [Torque Detection Time 2]*.

Note:

- When *L6-04 = 5, 6, 7, or 8 [Torque Detection Selection 2 = UL @ Speed Agree - Alarm only, UL @ RUN - Alarm only, UL @ Speed Agree - Fault, or UL @ RUN - Fault]*, the drive will detect when the output current/torque is less than *L6-05* for longer than *L6-06*.
- Refer to *L6: Torque Detection on page 642* for more information.

■ 1A: During Down Direction

Setting Value	Function	Description
1A	During Down Direction	V/f OLV CLV CLV/PM The terminal activates when the motor operates in the Down direction.

ON : The motor is operating in the Down direction.

OFF : The motor is operating in the Up direction or the motor stopped.

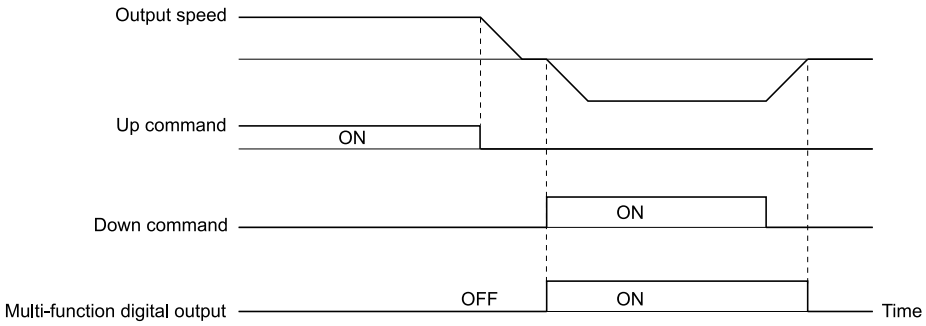

Figure 12.36 Down Direction Output Time Chart

■ 1B: During Baseblock (N.C.)

Setting Value	Function	Description
1B	During Baseblock (N.C.)	V/f OLV CLV CLV/PM The terminal deactivates during baseblock. When the drive is in baseblock, the drive output transistor stops switching and does not make DC bus voltage.

ON : The drive is not in baseblock.

OFF : During baseblock

■ 1C: Motor 2 Selected

Setting Value	Function	Description
1C	Motor 2 Selected	V/f OLV CLV CLV/PM The terminal activates when you select motor 2.

ON : Motor 2 Selected

OFF : Motor 1 Selected

■ 1E: Reset Enabled

Setting Value	Function	Description
1E	Reset Enabled	V/f OLV CLV CLV/PM The terminal activates when the drive tries to reset after a fault has occurred.

The Automatic Fault Reset function lets the drive automatically clear a fault.

The terminal deactivates when:

- The drive has automatically cleared the fault and has tried to reset
- The Automatic Fault Reset function detects the fault again because there were too many reset attempts as specified by *L5-01 [Number of Auto Reset Attempts]*

Note:

Refer to *L5: Automatic Fault Reset on page 640* for more information.

■ 1F: Motor Overload Alarm (oL1)

Setting Value	Function	Description
1F	Motor Overload Alarm (oL1)	V/f OLV CLV CLV/PM The terminal activates when the electronic thermal protection value of the motor overload protective function is a minimum of 90% of the detection level.

Note:

Refer to “L1-01: Motor Overload (oL1) Protection” for more information.

■ 20: Drive Overheat Pre-Alarm (oH)

Setting Value	Function	Description
20	Drive Overheat Pre-Alarm (oH)	V/f OLV CLV CLV/PM The terminal activates when the drive heatsink temperature is at the level set with *L8-02 [Overheat Alarm Level]*.

Note:

Refer to *L8-02: Overheat Alarm Level on page 647* for more information.

■ 21: Safe Torque OFF

Setting Value	Function	Description
21	Safe Torque OFF	V/f OLV CLV CLV/PM The terminal activates (safety stop state) when the safety circuit and safety diagnosis circuit are operating correctly and when terminals H1-HC and H2-HC are OFF (Open).

ON : Safety stop state

Terminals H1-HC and H2-HC are OFF (Open) (safety stop state).

OFF : Safety circuit fault or RUN/READY

Terminal H1-HC or terminal H2-HC is OFF (Open) (safety circuit fault), or the two terminals are ON or have short circuited (RUN/READY).

■ 2F: Maintenance Notification

Setting Value	Function	Description
2F	Maintenance Notification	V/f OLV CLV CLV/PM The terminal activates when drive components are at their estimated maintenance period.

Tells you about the maintenance period for these items:

- IGBT
- Cooling fan
- Capacitor
- Soft charge bypass relay

Note:

Refer to *Alarm Outputs for Maintenance Monitors on page 364* for more information.

■ 30: During Torque Limit

Setting Value	Function	Description
30	During Torque Limit	V/f OLV CLV CLV/PM The terminal activates when the torque reference is the torque limit set with *L7 parameters*, *H3-02, H3-06, or H3-10 [MFAI Function Selection]*.

Note:

Refer to *L7: Torque Limit on page 645* for more information.

■ 33: Zero Servo Complete

Setting Value	Function	Description
33	Zero Servo Complete	V/f OLV CLV CLV/PM The terminal activates when the motor rotor position is in the range set with *S3-04 [Position Lock Bandwidth]* during Position Lock at start or stop.

■ 37: During Frequency Output

Setting Value	Function	Description
37	During Frequency Output	V/f OLV CLV CLV/PM The terminal activates when the drive outputs frequency.

ON : The drive is outputting frequency.

OFF : The drive is not outputting frequency.

Note:

The terminal deactivates in these conditions:

- During Stop
- During Baseblock
- During DC Injection Braking (initial excitation)
- During Short Circuit Braking
- During Pole Position Detection

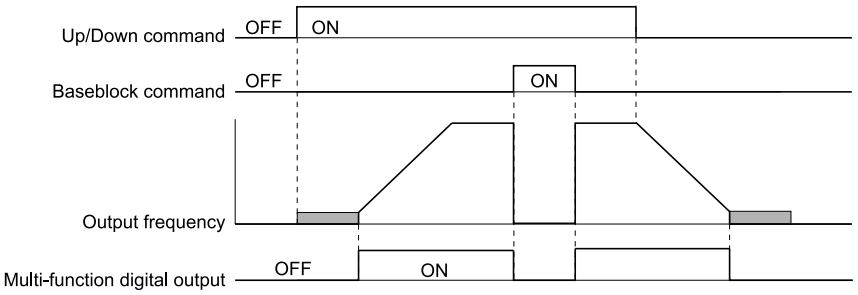

Figure 12.37 Active Frequency Output Time Chart

■ 47: PF Detected

Setting Value	Function	Description
47	PF Detected	V/f OLV CLV CLV/PM This terminal activates when the drive detects *PF [Input Phase Loss]*.

■ 4E: Braking Transistor Fault (rr)

Setting Value	Function	Description
4E	Braking Transistor Fault (rr)	V/f OLV CLV CLV/PM The terminal activates when the internal braking transistor overheats and the drive detects an *rr [Dynamic Braking Transistor Fault]* fault.

■ 50: Brake Control

Setting Value	Function	Description
50	Brake Control	V/f OLV CLV CLV/PM The terminal activates when it sends the signal to release the brake. Use this setting in the brake sequence for the elevator application.

ON : The terminal outputs the signal to release the brake.
OFF : The brake is applied.

Refer to *Brake Sequence on page 175* for more information.

■ 51: Output Contactor Control

Setting Value	Function	Description
51	Output Contactor Control	V/f OLV CLV CLV/PM The terminal activates when it sends the signal to close the electromagnetic contactor to the controller. Use this setting to open and close the electromagnetic contactor.

ON : The terminal outputs the signal to close the electromagnetic contactor on the output side.
OFF : The electromagnetic contactor is open.

■ 52: Door Zone

Setting Value	Function	Description
52	Door Zone	V/f OLV CLV CLV/PM The terminal activates when the speed is at the value set in *L4-13 [Door Zone Level]*, and the controller should open the elevator door.

■ 54: Light Load Direction

Setting Value	Function	Description
54	Light Load Direction	V/f OLV CLV CLV/PM The terminal activates or deactivates when the drive detects the light load direction with the Light Load Direction Search during emergency operation.

ON : The light load direction is up.
OFF : The light load direction is down.

Refer to *Light Load Direction Search Function on page 194* for more information.

■ 55: Light Load Detection Active

Setting Value	Function	Description
55	Light Load Detection Active	V/f OLV CLV CLV/PM The terminal activates when the drive is ready for Light Load Direction Search.

The terminal deactivates during the Light Load Direction Search. When the search is complete, the terminal activates again.

ON : The drive is ready for Light Load Direction Search.

OFF : The Light Load Direction Search is in progress.

Refer to *Light Load Direction Search Function on page 194* for more information.

■ 58: Safe Disable Active

Setting Value	Function	Description
58	Safe Disable Active	V/f OLV CLV CLV/PM The terminal activates when one or both of the Safe Disable Input terminals H1-HC and H2-HC are OFF. The terminal deactivates when both of the terminals H1-HC and H2-HC are ON.

ON : One or both of the Safe Disable Input terminals H1-HC and H2-HC are OFF.

The drive is in a baseblock state.

OFF : Safe Disable Input terminals H1-HC and H2-HC are ON.

The drive operates normally.

Refer to *Safe Disable Monitor Output Function and Keypad Display on page 259* for more information.

■ 5C: Motor Current Monitor

Setting Value	Function	Description
5C	Motor Current Monitor	V/f OLV CLV CLV/PM The terminal activates when the drive detects the motor current ≤ *L8-99 [Current Monitoring Level]* and the drive output shuts off.

■ 5D: During Brake Torque Check

Setting Value	Function	Description
5D	During Brake Torque Check	V/f OLV CLV CLV/PM The terminal activates when the MFDI terminal set for *H1-xx = 5D [Brake Trq Req]* activates.

ON : The Brake Torque Check Request is ON.

OFF : The Brake Torque Check Request is OFF and the Up/Down command is OFF.

Refer to *Brake Torque Check Function on page 179* for more information.

■ 5E: Brake Torque Check Complete

Setting Value	Function	Description
5E	Brake Torque Check Complete	V/f OLV CLV CLV/PM The terminal activates when the drive did the Brake Torque Check operation for the time of "*S5-33 [Motor Torque Ramp Up Time]* + *S5-35 [Brake Torque Check Run Time]*" and the check has completed successfully.

ON : The Brake Torque Check has completed successfully.

OFF : The Brake Torque Check Request is OFF and the Up/Down command is OFF.

Refer to *Brake Torque Check Function on page 179* for more information.

■ 60: Internal Cooling Fan Failure

Setting Value	Function	Description
60	Internal Cooling Fan Failure	V/f OLV CLV CLV/PM The terminal activates when the drive detects a cooling fan failure in the drive.

■ 61: Pole Position Detection Complete

Setting Value	Function	Description
61	Pole Position Detection Complete	V/f OLV CLV CLV/PM The terminal activates when the drive receives an Up/Down command and the drive detects the motor magnetic pole position of the PM motor.

Refer to *Initial Rotor Pole Position Search Settings on page 659* for more information about Motor Pole Position Search.

Use this setting in applications where the motor speed feedback is supplied from a non-absolute encoder (for example an incremental encoder) and where you do not use the drive brake sequence.

Design the external brake sequence to interlock the brake as long as the Motor Pole Position Search has not finished. In this case, the external brake sequence should be designed to interlock the brake during Motor Pole Position Search.

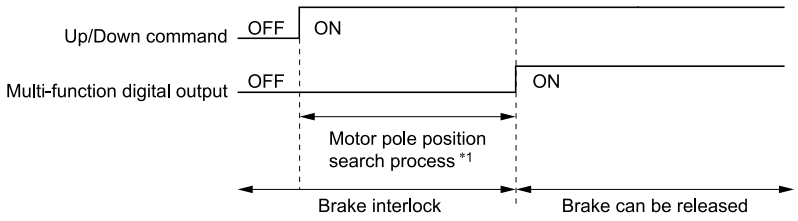

Figure 12.38 Motor Pole Search Status Time Chart

*1 The search process takes 0.5 s to 5.0 s depending on the settings of *n8-35 [Initial Pole Detection Method]* and *n8-86 [Pole Search Error Detection Sel]*.

■ 65: Standby Output

Setting Value	Function	Description
65	Standby Output	V/f OLV CLV CLV/PM The terminal activates after the drive stops operating and after the time set in *b8-51 [Standby Mode Wait Time]*, or when the MFDI terminal set for *H1-xx = BB or 1BB [MFDI Function Selection = Standby or !Standby]* activates.

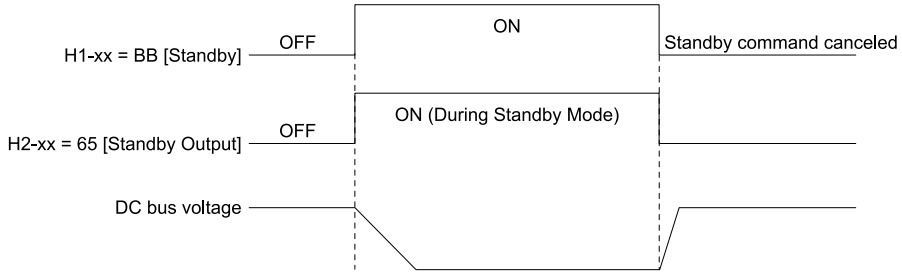

Figure 12.39 When H1-xx = BB or 1BB Activates

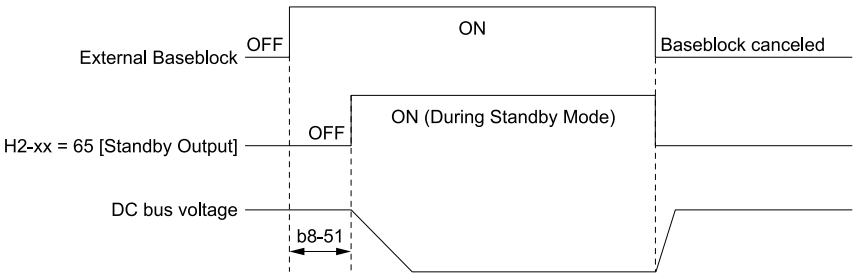

Figure 12.40 When the Drive Baseblock Continues for b8-51

ON : During Standby Mode

OFF : The drive is not in Standby Mode.

Refer to *Standby Mode on page 531* for more information about Standby Mode.

■ 69: External Power 24V Supply

Setting Value	Function	Description
69	External Power 24V Supply	V/f OLV CLV CLV/PM The terminal activates when there is an external 24 V power supply between terminals PS-AC.

ON : The external 24V power supply is supplying power.

OFF : The external 24V power supply is not supplying power.

■ 6A: Data Logger Error

Setting Value	Function	Description
6A	Data Logger Error	V/f OLV CLV CLV/PM The terminal activates when the drive detects a *LoG [Com Error / Abnormal SD card]*.

■ 74: Slow Down

Setting Value	Function	Description
74	Slow Down	V/f OLV CLV CLV/PM The terminal activates when the MFDI terminal set for *H1-xx = 53 [Leveling Speed]* activates after the terminal set for *H1-xx = 50 [Nominal Speed]*, *51 [Intermediate Speed]*, or *52 [Releveling Speed]* is activated.

ON : The MFDI terminal set for *H1-xx = 53* activates after the terminal set for *H1-xx = 50, 51, or 52* is activated.

OFF : The MFDO terminal set for *H2-xx = 0 [During Run]* deactivates and the drive is stopped.

This function is necessary as a feedback signal to the controller to delay the open command for the motor contactors until DC Braking has been completed. Only with this signal, the controller activates the MFDI terminal set for *H1-xx = BA [Landing Zone]* which is finally used to remove the internal Run command so that the motor ramps down to DC braking at stop.

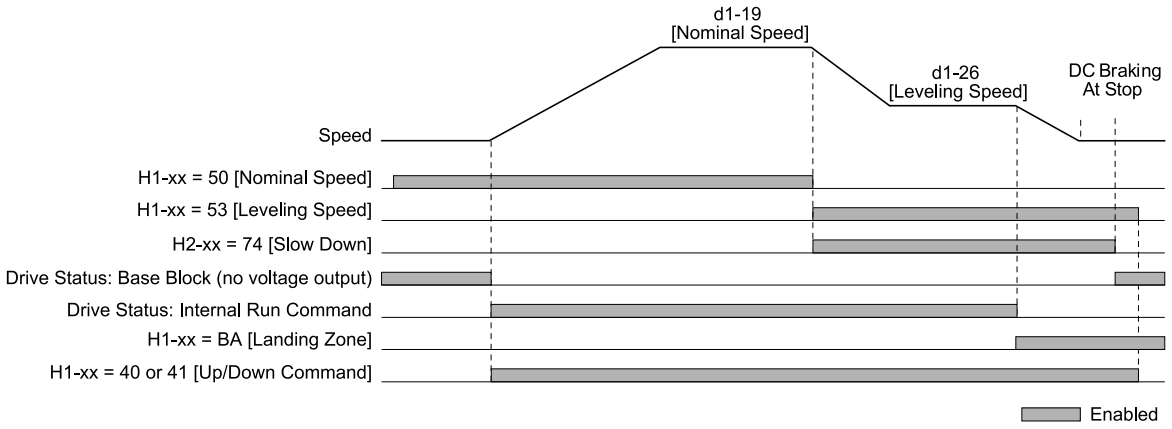

Figure 12.41 Slow Down Sequence

■ 75: TDCC Pulse Output

Setting Value	Function	Description
75	TDCC Pulse Output	V/f OLV CLV CLV/PM The terminal activates when it outputs the pulse for Travel Direction Change Counter (TDCC). With every direction change of the elevator car, the terminal outputs the TDCC pulse for 0.5 s to count down the number of direction changes.

Note:

This function is available only when *o4-40 = 1 [Travel Direct Change CounterEnbl = Enabled]*.

Refer to *Travel Direction Change Counter on page 673* for more information.

■ 76: TDCC Alarm Level Reached

Setting Value	Function	Description
76	TDCC Alarm Level Reached	V/f OLV CLV CLV/PM The terminal activates when the Travel Direction Change Counter (TDCC) has reached the value set in *o4-41 [Travel Direct Counter AlarmLevel]*, and the drive detects a *TCA [TDCC Alarm]*.

Note:

This function is available only when *o4-40 = 1 [Travel Direct Change CounterEnbl = Enabled]*.

Refer to *Travel Direction Change Counter on page 673* for more information.

■ 77: TDCC Fault Level Reached

Setting Value	Function	Description
77	TDCC Fault Level Reached	V/f OLV CLV CLV/PM The terminal activates when the Travel Direction Change Counter (TDCC) is 0, and the drive detects a *TCF [TDCC Fault]*. This output signal shows that the lifetime of elevator ropes has expired. Replace elevator ropes.

Note:
This function is available only when *o4-40 = 1 [Travel Direct Change CounterEnbl = Enabled]*.

Refer to *Travel Direction Change Counter on page 673* for more information.

■ 78: Short Circuit Brake Release

Setting Value	Function	Description
78	Short Circuit Brake Release	V/f OLV CLV CLV/PM The terminal activates when you remove the *STo [Safe Torque OFF]* or the input signal from the MFDI terminal set for *H1-xx = 9 [Baseblock Command (N.C.)]*.

When the drive receives the *STo* or *Baseblock Command* signal, the drive will deactivate this output signal after the time set in *S1-10 [Up/Down Command Delay Time]*.

When you set *H1-xx = 4B [Short Circuit MCFeedback (NO)]* or *4C [Short Circuit MCFeedback (NC)]* for an MFDI terminal, the drive activates the PWM 20 ms after the drive receives the *Short Circuit MCFeedback* signal and after the time set in *S1-10* elapses from the drive receives the Up/Down command.

ON : The *STo* or *Baseblock Command* signal is removed.

OFF : The *STo* or *Baseblock Command* signal is input.

Refer to *Short Circuit Brake Sequence on page 203* for more information.

■ 7A: During Up Direction

Setting Value	Function	Description
7A	During Up Direction	V/f OLV CLV CLV/PM The terminal activates when the motor operates in the Up direction.

ON : The motor is operating in the Up direction.

OFF : The motor is operating in the Down direction or the motor stopped.

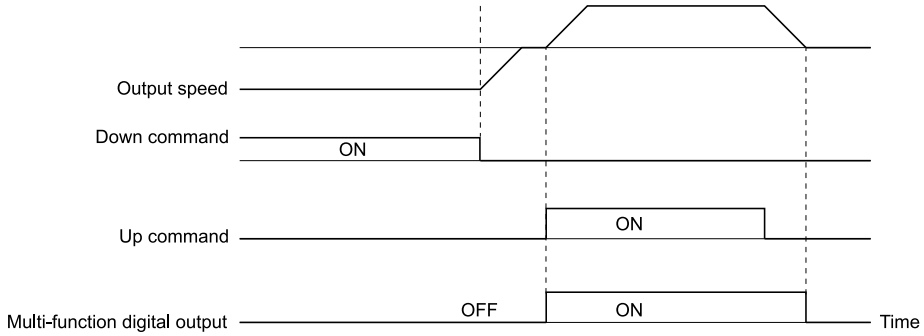

Figure 12.42 Up Direction Output Time Chart

■ 100 to 17A: Inverse Outputs of 0 to 7A

Setting Value	Function	Description
100 to 17A	Inverse Outputs of 0 to 7A	V/f OLV CLV CLV/PM Causes inverse output of the function for the selected MFDO. Uses the last two digits of 1xx to select which function to inversely output.

For example, set *H2-xx = 10E* for the inverse output of *E [Fault]*.

◆ H3: Analog Inputs

⚠ WARNING Sudden Movement Hazard

Do test runs and examine the drive to make sure that the command references are correct. If you set the command reference incorrectly, it can cause damage to the drive or serious injury or death.

Drives have three analog input terminals: terminals A1, A2, and A3. *H3 parameters* select the functions set to these analog input terminals and adjust signal levels.

Table 12.27 shows the functions that you can set to analog input terminals. Use *H3-02, H3-06, and H3-10 [MFAI Function Selection]* to set functions.

Table 12.27 MFAI Setting Values

Setting Value	Function	Ref.
0	Speed Reference	623
2	Auxiliary Speed Reference 1	623
3	Auxiliary Speed Reference 2	623
E	Motor Temperature (PTC Input)	623
14	Torque Compensation	624
1F	Not Used	624

Note:

All analog input scaling uses gain and bias for adjustment. Set the gain and bias values correctly.

Example of Analog Input Settings	Setting of Terminal A1	Speed Reference
Speed reference with the gain setting adjusted	• *H3-02 = 0 [Terminal A1 Function Selection = Speed Reference]* • *H3-03 = 200.0 [Terminal A1 Gain Setting = 200%]* • *H3-04 = 0.0 [Terminal A1 Bias Setting = 0.0%]*	• When you input a 10 V signal, the speed reference will be 200%. • When you input a 5 V signal, the speed reference will be 100%. When you input a 5 V or more signal, *E1-04 [Maximum Output Frequency]* will limit the drive output and the speed reference will be 100%. H3-01 = 0 Speed reference Gain = 200% 100% E1-04 Bias = 0% 0 V 5 V 10 V H3-01 = 1 Gain = 200% 100% E1-04 -10 V -5 V 0 V 5 V 10 V -100% E1-04 Gain = -200%
Speed reference with a negative number bias set	• *H3-02 = 0 [Speed Reference]* • *H3-03 = 100.0 [100.0%]* • *H3-04 = -25.0 [-25.0%]*	• When you input a 0 V signal, the speed reference will be -25%. • When *H3-01 = 0 [Terminal A1 Signal Level Select = 0 to 10V (Lower Limit at 0)]*: – When you input a 0 V to 2 V signal, the speed reference will be 0%. – When you input a 2 V to 10 V signal, the speed reference will be 0% to 100%. • When *H3-01 = 1 [-10 to +10V (Bipolar Reference)]*: – When you input a 0 V to 2 V signal, it enables signals of positive and negative polarities and the motor rotates in the down direction. H3-01 = 0 Speed reference Gain = 100% H3-01 = 0 0 2 V 10 V Bias = -25% H3-01 = 1 H3-01 = 1 Gain = 100% -10 V -6 V 2 V 10 V Bias = -25% Gain = -100% E1-04 Gain = -150%

■ H3-01: Terminal A1 Signal Level Select

No. (Hex.)	Name	Description	Default (Range)
H3-01 (0410)	Terminal A1 Signal Level Select	V/f OLV CLV CLV/PM Sets the input signal level for MFAI terminal A1.	0 (0, 1)

0 : 0 to 10V (Lower Limit at 0)

The voltage signal is 0 Vdc to 10 Vdc. The minimum input level limit is 0%. The drive will read a negative input signal caused by gain and bias settings as 0%.

1 : -10 to +10V (Bipolar Reference)

The voltage signal is -10 Vdc to +10 Vdc. Signals of both positive and negative polarities are enabled. When the drive uses this setting as the speed reference, an Up command will run the motor in down direction and a Down command will run the motor in up direction. The gain and bias settings will cause the signal to be a negative number.

■ H3-02: Terminal A1 Function Selection

No. (Hex.)	Name	Description	Default (Range)
H3-02 (0434)	Terminal A1 Function Selection	V/f OLV CLV CLV/PM Sets the function for MFAI terminal A1.	0 (0 - 1F)

■ H3-03: Terminal A1 Gain Setting

No. (Hex.)	Name	Description	Default (Range)
H3-03 (0411) RUN	Terminal A1 Gain Setting	V/f OLV CLV CLV/PM Sets the gain of the analog signal input to MFAI terminal A1.	100.0% (-999.9 - +999.9%)

When 10 V is input, this parameter sets the reference quantity for the function set for terminal A1 as a percentage.

Use this parameter and *H3-04 [Terminal A1 Bias Setting]* to adjust the characteristics of the analog input signal to terminal A1.

■ H3-04: Terminal A1 Bias Setting

No. (Hex.)	Name	Description	Default (Range)
H3-04 (0412) RUN	Terminal A1 Bias Setting	V/f OLV CLV CLV/PM Sets the bias of the analog signal input to MFAI terminal A1.	0.0% (-999.9 - +999.9%)

When 0 V is input, this parameter sets the bias for the function set for terminal A1 as a percentage.

Use this parameter and *H3-03 [Terminal A1 Gain Setting]* to adjust the characteristics of the analog input signal to terminal A1.

■ H3-05: Terminal A3 Signal Level Select

No. (Hex.)	Name	Description	Default (Range)
H3-05 (0413)	Terminal A3 Signal Level Select	V/f OLV CLV CLV/PM Sets the input signal level for MFAI terminal A3.	0 (0, 1)

0 : 0 to 10V (Lower Limit at 0)

The voltage signal is 0 Vdc to 10 Vdc. The minimum input level limit is 0%. The drive will read a negative input signal caused by gain and bias settings as 0%.

1 : -10 to +10V (Bipolar Reference)

The voltage signal is -10 Vdc to 10 Vdc. Signals of both positive and negative polarities are enabled. When the drive uses this setting as the speed reference, an Up command will run the motor in down direction and a Down command will run the motor in up direction. The gain and bias settings will cause the signal to be a negative number.

■ H3-06: Terminal A3 Function Selection

No. (Hex.)	Name	Description	Default (Range)
H3-06 (0414)	Terminal A3 Function Selection	V/f OLV CLV CLV/PM Sets the function for MFAI terminal A3.	1F (0 - 1F)

Note:

When terminal A3 is the PTC input terminal:
- Set *H3-06 = E [Motor Temperature (PTC input)]*.
- Set DIP switch S4 to the PTC side.

■ H3-07: Terminal A3 Gain Setting

No. (Hex.)	Name	Description	Default (Range)
H3-07 (0415) RUN	Terminal A3 Gain Setting	V/f OLV CLV CLV/PM Sets the gain of the analog signal input to MFAI terminal A3.	100.0% (-999.9 - +999.9%)

When 10 V is input, this parameter sets the reference quantity for the function set for terminal A3 as a percentage.

Use this parameter and *H3-08 [Terminal A3 Bias Setting]* to adjust the characteristics of the analog input signal to terminal A3.

■ H3-08: Terminal A3 Bias Setting

No. (Hex.)	Name	Description	Default (Range)
H3-08 (0416) RUN	Terminal A3 Bias Setting	V/f OLV CLV CLV/PM Sets the bias of the analog signal input to MFAI terminal A3.	0.0% (-999.9 - +999.9%)

When 0 V is input, this parameter sets the bias for the function set for terminal A3 as a percentage.

Use this parameter and *H3-07 [Terminal A3 Gain Setting]* to adjust the characteristics of the analog input signal to terminal A3.

■ H3-09: Terminal A2 Signal Level Select

No. (Hex.)	Name	Description	Default (Range)
H3-09 (0417)	Terminal A2 Signal Level Select	V/f OLV CLV CLV/PM Sets the input signal level for MFAI terminal A2.	0 (0 - 3)

0 : 0-10V (LowLim=0)

The voltage signal is 0 Vdc to 10 Vdc. The minimum input level limit is 0%. The drive will read a negative input signal caused by gain and bias settings as 0%.

1 : -10 to +10V (Bipolar Reference)

The voltage signal is -10 Vdc to 10 Vdc. Signals of both positive and negative polarities are enabled. When the drive uses this setting as the speed reference, an Up command will run the motor in down direction and a Down command will run the motor in up direction. The gain and bias settings will cause the signal to be a negative number.

2 : 4 to 20 mA

The current signal is 4 mA to 20 mA. The minimum input level limit is 0%. The drive will read a negative input signal caused by gain and bias settings as 0%.

3 : 0 to 20 mA

The current signal is 0 mA to 20 mA. The minimum input level limit is 0%. The drive will read a negative input signal caused by gain and bias settings as 0%.

Note:

When *H3-09 = 0, 1*, set DIP switch S1 to the V side (voltage). When *H3-09 = 2, 3*, set DIP switch S1 to the I side (current). The default setting is the I side (current).

■ H3-10: Terminal A2 Function Selection

No. (Hex.)	Name	Description	Default (Range)
H3-10 (0418)	Terminal A2 Function Selection	V/f OLV CLV CLV/PM Sets the function for MFAI terminal A2.	1F (0 - 1F)

■ H3-11: Terminal A2 Gain Setting

No. (Hex.)	Name	Description	Default (Range)
H3-11 (0419) RUN	Terminal A2 Gain Setting	V/f OLV CLV CLV/PM Sets the gain of the analog signal input to MFAI terminal A2.	100.0% (-999.9 - +999.9%)

When 10 V (or 20 mA) is input, this parameter sets the reference quantity for the function set for terminal A2 as a percentage.

Use this parameter and *H3-12 [Terminal A2 Bias Setting]* to adjust the characteristics of the analog input signal to terminal A2.

■ H3-12: Terminal A2 Bias Setting

No. (Hex.)	Name	Description	Default (Range)
H3-12 (041A) RUN	Terminal A2 Bias Setting	V/f OLV CLV CLV/PM Sets the bias of the analog signal input to MFAI terminal A2.	0.0% (-999.9 - +999.9%)

When 0 V (4 mA or 0 mA) is input, this parameter sets the bias for the function set for terminal A2 as a percentage.

Use this parameter and *H3-11 [Terminal A2 Gain Setting]* to adjust the characteristics of the analog input signal to terminal A2.

■ H3-13: Analog Input FilterTime Constant

No. (Hex.)	Name	Description	Default (Range)
H3-13 (041B)	Analog Input FilterTime Constant	V/f OLV CLV CLV/PM Sets the time constant for primary delay filters on MFAI terminals.	0.03 s (0.00 - 2.00 s)

Apply the primary delay filter to the analog input to enable an analog input signal without the use of high-frequency noise components. An analog input filter prevents irregular drive control. Drive operation becomes more stable as the programmed time becomes longer, but it also becomes less responsive to quickly changing analog signals.

■ H3-16: Terminal A1 Offset

No. (Hex.)	Name	Description	Default (Range)
H3-16 (02F0)	Terminal A1 Offset	V/f OLV CLV CLV/PM Sets the offset level for analog signals input to terminal A1. Usually it is not necessary to change this setting.	0 (-500 - +500)

Adds the offset value for the analog input value. For voltage input, this parameter will set the offset when a signal of 0 V is input.

■ H3-17: Terminal A2 Offset

No. (Hex.)	Name	Description	Default (Range)
H3-17 (02F1)	Terminal A2 Offset	V/f OLV CLV CLV/PM Sets the offset level for analog signals input to terminal A2. Usually it is not necessary to change this setting.	0 (-500 - +500)

Adds the offset value for the analog input value. For voltage input, this parameter will set the offset when a signal of 0 V is input. For current input, this parameter will set the offset when a signal of *4 mA [H3-09 = 2]* or *0 mA [H3-09 = 3]* is input.

■ H3-18: Terminal A3 Offset

No. (Hex.)	Name	Description	Default (Range)
H3-18 (02F2)	Terminal A3 Offset	V/f OLV CLV CLV/PM Sets the offset level for analog signals input to terminal A3. Usually it is not necessary to change this setting.	0 (-500 - +500)

Adds the offset value for the analog input value. For voltage input, this parameter will set the offset when a signal of 0 V is input.

◆ MFAI Setting Values

This section gives information about the functions set with *H3-02, H3-06, and H3-10*.

■ 0: Speed Reference

Setting Value	Function	Description
0	Speed Reference	V/f OLV CLV CLV/PM The input value from the MFAI terminal set with this function becomes the master speed reference.

- You can copy the configuration to more than one of the analog input terminals A1 to A3. When you set more than one analog input terminal with the master speed reference, the sum value becomes the frequency bias.
- If you use this function to set the analog input value as the master speed reference, set *b1-01 = 1 [Speed Reference Selection 1 = Analog Input]*. This setting value is the default value for terminals A1 and A2.
- The speed reference is the sum of the input values for terminals A1 and A2 when they are used at the same time. For example, when a 20% bias is input to terminal A2 while a speed reference of 50% is input from terminal A1, the calculated speed reference will be 70% of the maximum output speed.

■ 2: Auxiliary Speed Reference 1

Setting Value	Function	Description
2	Auxiliary Speed Reference 1	V/f OLV CLV CLV/PM Sets Reference 2 through multi-step speed reference to enable the command reference (Auxiliary Speed Reference 1) from the analog input terminal set here. This value is a percentage where the *E1-04 [Maximum Output Frequency]* setting is a setting value of 100%.

Refer to *Speed Selection Using Digital Inputs (b1-01 = 0) on page 170* for more information.

■ 3: Auxiliary Speed Reference 2

Setting Value	Function	Description
3	Auxiliary Speed Reference 2	V/f OLV CLV CLV/PM Sets Reference 3 through multi-step speed reference to enable the command reference (Auxiliary Speed Reference 2) from the analog input terminal set here. This value is a percentage where the *E1-04 [Maximum Output Frequency]* setting is a setting value of 100%.

Refer to *Speed Selection Using Digital Inputs (b1-01 = 0) on page 170* for more information.

■ E: Motor Temperature (PTC Input)

Setting Value	Function	Description
E	Motor Temperature (PTC Input)	V/f OLV CLV CLV/PM Uses the motor Positive Temperature Coefficient (PTC) thermistor to prevent heat damage to the motor as a percentage of the current value when the 10 V analog signal is input.

- You can use the Positive Temperature Coefficient (PTC) thermistor as an auxiliary or alternative detection function for *oL1 [Motor Overload]* problems to help prevent heat damage to motors. If the PTC input signal is more than the overload alarm level, *oH3 [Motor Overheat (PTC Input)]* will flash on the keypad.
- When the drive detects *oH3*, the motor stops with the setting in *L1-03 [Motor Thermistor oH Alarm Select]*. When the drive detects *oH4*, the motor stops with the setting in *L1-04 [Motor Thermistor oH Fault Select]*. When the drive incorrectly detects motor overheating problems, set *L1-05 [Motor Thermistor Filter Time]*.

Refer to *Motor Protection Using Positive Temperature Coefficient (PTC) Thermistors on page 632* for more information.

■ 14: Torque Compensation

Setting Value	Function	Description
14	Torque Compensation	V/f OLV CLV CLV/PM Enters the torque compensation value if the motor rated torque is 100%.

This function allows an analog signal to the input terminal to adjust the amount of torque compensation to handle and unbalance at start when elevators sensors indicate that a large load was added to the car. This helps to minimize shock and jerking at start. To use this function, an analog signal from a load sensor is necessary.

Refer to *Brake Sequence Using Torque Compensation on page 176* for more information.

■ 1F: Not Used

Setting Value	Function	Description
1F	Not Used	V/f OLV CLV CLV/PM Use this setting for unused terminals or to use terminals in through mode.

When you set a terminal that you do not use to *1F*, you can use the signal that is input to that terminal as the PLC analog signal input from MEMOBUS/Modbus communications or the communication option.

◆ H4: Analog Outputs

H4 parameters set the drive analog monitors. These parameters select monitor parameters, adjust gain and bias, and select output signal levels.

■ Calibrate Meters Connected to MFAO Terminals FM and AM

To calibrate the meters connected to terminals FM and AM, use these parameters:

- *H4-02 [Terminal FM Analog Output Gain]*
- *H4-03 [Terminal FM Analog Output Bias]*
- *H4-05 [Terminal AM Analog Output Gain]*
- *H4-06 [Terminal AM Analog Output Bias]*

Set these parameters where the output voltage of 10 V is 100% of the signal level.

No.	Name	Range	Default
H4-02	Terminal FM Analog Output Gain	-999.9 - +999.9%	100.0%
H4-03	Terminal FM Analog Output Bias	-999.9 - +999.9%	0.0%
H4-05	Terminal AM Analog Output Gain	-999.9 - +999.9%	50.0%
H4-06	Terminal AM Analog Output Bias	-999.9 - +999.9%	0.0%
H4-07	Terminal FM Signal Level Select	0: 0 to 10 Vdc 1: -10 to +10 Vdc	0
H4-08	Terminal AM Signal Level Select	0: 0 to 10 Vdc 1: -10 to +10 Vdc	0

Figure 12.43 and Figure 12.44 show the gain and bias.

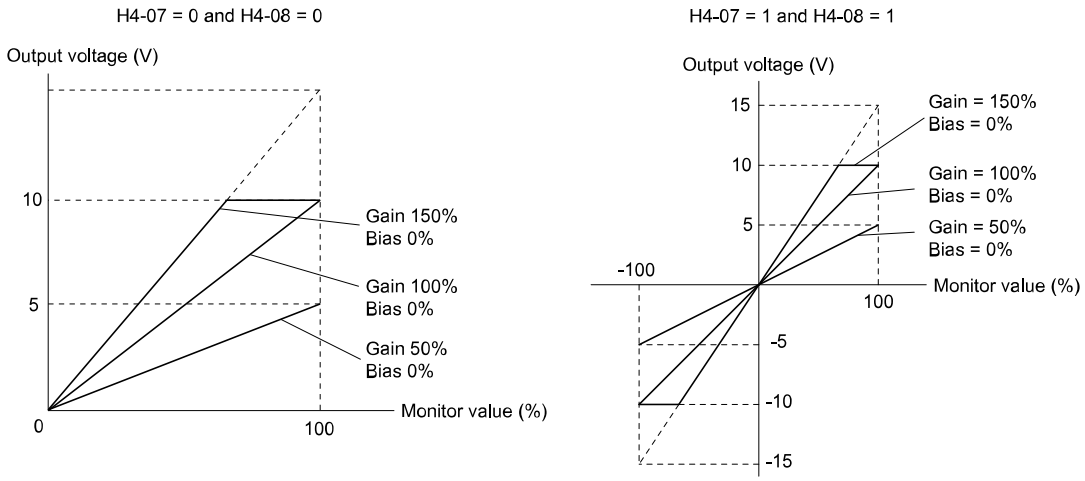

Figure 12.43 Analog Output Gain/Bias Configuration Example 1

For example, when the parameter value set to analog output is 0, and a 3 V signal is output to terminal FM, *H4-03 [Terminal FM Analog Output Bias]* is set to 30%.

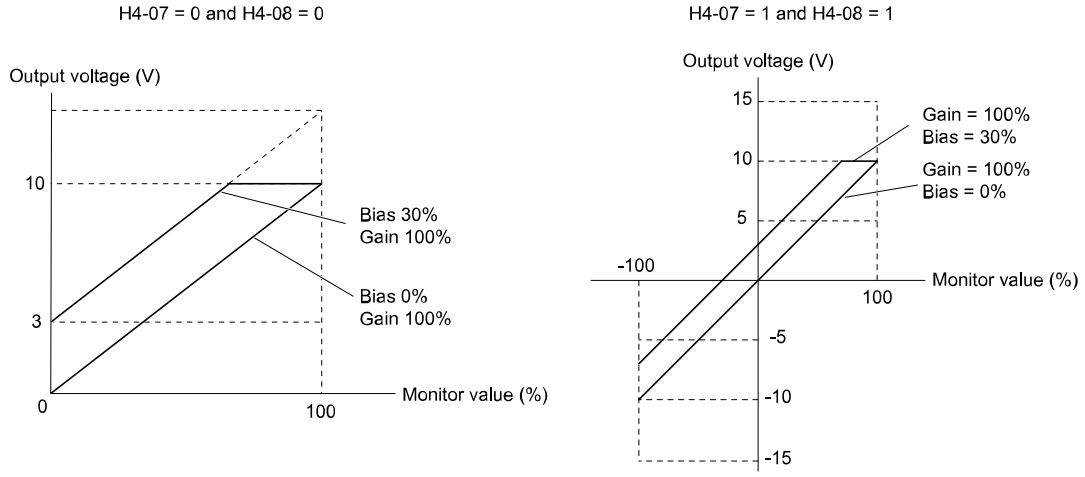

Figure 12.44 Analog Output Gain/Bias Configuration Example 2

Calibrate Terminal FM

Stop the drive to calibrate meters. Use this procedure to calibrate:

1. Show *H4-02 [Terminal FM Analog Output Gain]* on the keypad.
   Terminal FM outputs the analog signal when the monitor item that you set in *H4-01 [Terminal FM Analog Output Select]* is 100%.
2. Adjust *H4-02* while referencing the meter scale connected to terminal FM.
3. Show *H4-03 [Terminal FM Analog Output Bias]* on the keypad.
   Terminal FM outputs the analog signal when the monitor item that you set in *H4-01* is 0%.
4. Adjust *H4-03* while referencing the meter scale connected to terminal FM.

Calibrate Terminal AM

Stop the drive to calibrate meters. Use this procedure to calibrate:

1. Show *H4-05 [Terminal AM Analog Output Gain]* on the keypad.
   Terminal AM outputs the analog signal when the monitor item that you set in *H4-04 [Terminal AM Analog Output Select]* is 100%.
2. Adjust *H4-05* while referencing the meter scale connected to terminal AM.
3. Show *H4-06 [Terminal AM Analog Output Bias]* on the keypad.
   Terminal AM outputs the analog signal when the monitor item that you set in *H4-04* is 0%.
4. Adjust *H4-06* while referencing the meter scale connected to terminal AM.

■ H4-01: Terminal FM Analog Output Select

No. (Hex.)	Name	Description	Default (Range)
H4-01 (041D) Expert	Terminal FM Analog Output Select	V/f OLV CLV CLV/PM Sets the monitor number to send from MFAO terminal FM.	102 (000 - 999)

Set the *x-xx* part of the *Ux-xx [Monitors]*. For example, set *H4-01 = 102* to monitor *U1-02 [Output Speed]*.

Note:
- You cannot use all of the monitors in all of the control methods.
- When you use the terminal in through mode, set this parameter to *000* or *031*. You can use MEMOBUS/Modbus communications or the communication option to set the terminal FM output level from the PLC.

■ H4-02: Terminal FM Analog Output Gain

No. (Hex.)	Name	Description	Default (Range)
H4-02 (041E) RUN Expert	Terminal FM Analog Output Gain	V/f OLV CLV CLV/PM Sets the gain of the monitor signal that is sent from MFAO terminal FM.	100.0% (-999.9 - +999.9%)

The analog signal output from the FM terminal is a maximum of ±10 V. Select the signal level with *H4-07 [Terminal FM Signal Level Select]*.

■ H4-03: Terminal FM Analog Output Bias

No. (Hex.)	Name	Description	Default (Range)
H4-03 (041F) RUN Expert	Terminal FM Analog Output Bias	V/f OLV CLV CLV/PM Sets the bias of the monitor signal that is sent from MFAO terminal FM.	0.0% (-999.9 - +999.9%)

The analog signal output from the FM terminal is a maximum of ±10 V. Select the signal level with *H4-07 [Terminal FM Signal Level Select]*.

■ H4-04: Terminal AM Analog Output Select

No. (Hex.)	Name	Description	Default (Range)
H4-04 (0420) Expert	Terminal AM Analog Output Select	V/f OLV CLV CLV/PM Sets the monitoring number to be output from the MFAO terminal AM.	103 (000 - 999)

Set the *x-xx* part of the *Ux-xx [Monitors]*. For example, set *H4-04 = 103* to monitor *U1-03 [Output Current]*.

Note:
- You cannot use all of the monitors in all of the control methods.
- When you use the terminal in through mode, set this parameter to *000* or *031*. You can use MEMOBUS/Modbus communications or the communication option to set the terminal AM output level from the PLC.

■ H4-05: Terminal AM Analog Output Gain

No. (Hex.)	Name	Description	Default (Range)
H4-05 (0421) RUN Expert	Terminal AM Analog Output Gain	V/f OLV CLV CLV/PM Sets the gain of the monitor signal that is sent from MFAO terminal AM.	50.0% (-999.9 - +999.9%)

The analog signal output from the AM terminal is a maximum of ±10 V. Select the signal level with *H4-08 [Terminal AM Signal Level Select]*.
Example settings:

When the output current of a monitoring item is 100% (continuous rated output current of the drive) in these examples, the voltage of AM terminal outputs at 5 V (50% of 10 V). The output current at the time the AM terminal outputs a maximum voltage of 10 V will be 200% of the continuous rated output current.

- *H4-04 = 103 [Terminal AM Analog Output Select = Output Current]*
- *H4-05 = 50.0%*
- *H4-06 = 0.0% [Terminal AM Analog Output Bias = 0.0%]*
- *H4-08 = 0 [0 to 10 V]*

■ H4-06: Terminal AM Analog Output Bias

No. (Hex.)	Name	Description	Default (Range)
H4-06 (0422) RUN Expert	Terminal AM Analog Output Bias	V/f OLV CLV CLV/PM Sets the bias of the monitor signal that is sent from MFAO terminal AM.	0.0% (-999.9 - +999.9%)

The analog signal output from the AM terminal is a maximum of ±10 V. Select the signal level with *H4-08 [Terminal AM Signal Level Select]*.

■ H4-07: Terminal FM Signal Level Select

No. (Hex.)	Name	Description	Default (Range)
H4-07 (0423) Expert	Terminal FM Signal Level Select	V/f OLV CLV CLV/PM Sets the MFAO terminal FM output signal level.	0 (0, 1)

0 : 0 to 10 Vdc

1 : -10 to +10 Vdc

■ H4-08: Terminal AM Signal Level Select

No. (Hex.)	Name	Description	Default (Range)
H4-08 (0424) Expert	Terminal AM Signal Level Select	V/f OLV CLV CLV/PM Sets the MFAO terminal AM output signal level.	0 (0, 1)

0 : 0 to 10 Vdc

1 : -10 to +10 Vdc

■ H4-20: Analog Power Monitor 100% Level

No. (Hex.)	Name	Description	Default (Range)
H4-20 (0B53)	Analog Power Monitor 100% Level	V/f OLV CLV CLV/PM Sets the level at 10 V when *U1-08 [Output Power]* is set for analog output.	0.00 kW (0.00 - 650.00 kW)

Note:
- When *H4-20 = 0.00 kW*, the output power monitor 10 V level = motor rated power. The setting changes when the *A1-02 [Control Method Selection]* setting changes:
  – *A1-02 = 0, 2, 3 [V/f, OLV, CLV]*: *E2-11 [Motor Rated Power]*
  – *A1-02 = 7 [CLV/PM]*: *E5-02 [PM Motor Rated Power]*

◆ H5: Serial Communication

H5 parameters configure the drive to use serial communications.

You can use the MEMOBUS/Modbus protocol over the RS-485 port (terminals D+ and D-) in the drive to use serial communication with programmable logic controllers (PLC).

■ H5-01: Drive Node Address

No. (Hex.)	Name	Description	Default (Range)
H5-01 (0425) Expert	Drive Node Address	V/f OLV CLV CLV/PM Sets the communication slave address for drives.	1 (0 - FF)

Note:
- Re-energize the drive or set *H5-20 = 1 [Communication Parameters Reload = Reload Now]* after you change the parameter setting.
- Setting 0 will not let the drive respond to MEMOBUS/Modbus communications.

To enable the drive to communicate with the controller (master) over MEMOBUS/Modbus communications, you must set the drive with a slave address. Set *H5-01 ≠ 0*.

Set a node address that is different from the master and other slave devices.

■ H5-02: Communication Speed Selection

No. (Hex.)	Name	Description	Default (Range)
H5-02 (0426) Expert	Communication Speed Selection	V/f OLV CLV CLV/PM Sets the communications speed for MEMOBUS/Modbus communications.	3 (0 - 8)

Note:

Re-energize the drive or set *H5-20 = 1 [Communication Parameters Reload = Reload Now]* after you change the parameter setting.

0 : 1200 bps
1 : 2400 bps
2 : 4800 bps
3 : 9600 bps
4 : 19.2 kbps
5 : 38.4 kbps
6 : 57.6 kbps
7 : 76.8 kbps
8 : 115.2 kbps

■ H5-03: Communication Parity Selection

No. (Hex.)	Name	Description	Default (Range)
H5-03 (0427) Expert	Communication Parity Selection	V/f OLV CLV CLV/PM Sets the communications parity used for MEMOBUS/Modbus communications.	0 (0 - 2)

Note:

Re-energize the drive or set *H5-20 = 1 [Communication Parameters Reload = Reload Now]* after you change the parameter setting.

0 : No parity
1 : Even parity
2 : Odd parity

■ H5-04: Communication Error Stop Method

No. (Hex.)	Name	Description	Default (Range)
H5-04 (0428) Expert	Communication Error Stop Method	V/f OLV CLV CLV/PM Sets the motor Stopping Method when the drive detects *CE [Modbus Communication Error]*.	3 (0 - 3)

0 : Ramp to Stop

The drive ramps the motor to stop in the deceleration ramp. Fault relay output terminal MA-MC turns ON, and MB-MC turns OFF.

1 : Coast to Stop

The output turns off and the motor coasts to stop. Fault relay output terminal MA-MC turns ON, and MB-MC turns OFF.

2 : Emergency Stop (Use C1-09)

The drive stops the motor in the deceleration ramp set in *C1-09 [Emergency Stop Ramp]*. Fault relay output terminal MA-MC turns ON, and MB-MC turns OFF.

3 : Alarm Only

The keypad shows *CE* and the drive continues operation. The output terminal set for *Alarm [H2-01 to H2-05 = 10]* activates.

■ H5-05: Comm Fault Detection Selection

No. (Hex.)	Name	Description	Default (Range)
H5-05 (0429) Expert	Comm Fault Detection Selection	V/f OLV CLV CLV/PM Sets the function that detects *CE [Modbus Communication Error]* issues during MEMOBUS/Modbus communications.	1 (0, 1)

If the drive does not receive data from the master during the time set in *H5-09 [CE Detection Time]*, it will detect a *CE* error.

0 : Disabled

Does not detect *CE*. The drive continues operation.

1 : Enabled

Detects *CE*. If the drive detects *CE*, it will operate as specified by the setting of *H5-04 [Communication Error Stop Method]*.

■ H5-06: Drive Transmit Wait Time

No. (Hex.)	Name	Description	Default (Range)
H5-06 (042A) Expert	Drive Transmit Wait Time	V/f OLV CLV CLV/PM Sets the time to wait to send a response message after the drive receives a command message from the master.	5 ms (5 - 65 ms)

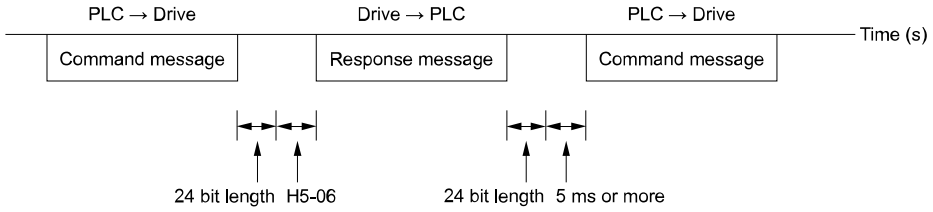

Figure 12.45 Drive Transmit Wait Time

■ H5-09: CE Detection Time

No. (Hex.)	Name	Description	Default (Range)
H5-09 (0435) Expert	CE Detection Time	V/f OLV CLV CLV/PM Sets the detection time for *CE [Modbus Communication Error]* issues when communication stops.	2.0 s (0.0 - 10.0 s)

■ H5-10: Modbus Register 0025H Unit Sel

No. (Hex.)	Name	Description	Default (Range)
H5-10 (0436) Expert	Modbus Register 0025H Unit Sel	V/f OLV CLV CLV/PM Sets the unit of measure used for the MEMOBUS/Modbus communications monitor register 0025H (output voltage reference monitor).	0 (0, 1)

0 : 0.1 V units

1 : 1 V units

■ H5-11: Comm ENTER Command Mode

No. (Hex.)	Name	Description	Default (Range)
H5-11 (043C) Expert	Comm ENTER Command Mode	V/f OLV CLV CLV/PM Sets the function to make the Enter command necessary to change parameters through MEMOBUS/Modbus communications.	0 (0, 1)

0 : ENTER Command Required

You must use the Enter command to enable changes to parameters. Make all parameter changes then input the Enter command.

1 : ENTER Command Not Required

It is not necessary to input the Enter command to change parameters.

■ H5-18: Motor Speed Filter over Comms

No. (Hex.)	Name	Description	Default (Range)
H5-18 (11A2)	Motor Speed Filter over Comms	V/f OLV CLV CLV/PM Sets the filter time constant used when monitoring motor speed during MEMOBUS/Modbus communications or with a communication option.	0 ms (0 - 100 ms)

Sets the filter time constant when you monitor the output speed or speed feedback during MEMOBUS/Modbus communications or use of the communication option.

These are the MEMOBUS registers:

- 003E (Output Speed)
- 003F (Output Speed)
- 0044 (*U1-05*: Speed Feedback)
- 00AC (*U1-05*: Speed Feedback)
- 00AD (*U1-05*: Speed Feedback)

■ H5-20: Communication Parameters Reload

No. (Hex.)	Name	Description	Default (Range)
H5-20 (0B57)	Communication Parameters Reload	V/f OLV CLV CLV/PM Sets the function to immediately enable updated MEMOBUS/Modbus communications parameters.	0 (0, 1)

0 : Reload at Next Power Cycle

1 : Reload Now

Note:

- The setting value automatically returns to *H5-20 = 0* after you enable MEMOBUS/Modbus communications parameter changes.
- The setting values of these parameters are enabled:
  - *H5-01 [Drive Node Address]*
  - *H5-02 [Communication Speed Selection]*
  - *H5-03 [Communication Parity Selection]*
  - *H5-06 [Drive Transmit Wait Time]*

■ H5-25: Function 5A Register 1 Selection

No. (Hex.)	Name	Description	Default (Range)
H5-25 (1589) RUN	Function 5A Register 1 Selection	V/f OLV CLV CLV/PM Returns the contents of the specified MEMOBUS/Modbus communications register when responding to the master device.	0044 (U1-05) (0000 - FFFF)

■ H5-26: Function 5A Register 2 Selection

No. (Hex.)	Name	Description	Default (Range)
H5-26 (158A) RUN	Function 5A Register 2 Selection	V/f OLV CLV CLV/PM Returns the contents of the specified MEMOBUS/Modbus communications register when responding to the master device.	0045 (U1-06) (0000 - FFFF)

■ H5-27: Function 5A Register 3 Selection

No. (Hex.)	Name	Description	Default (Range)
H5-27 (158B) RUN	Function 5A Register 3 Selection	V/f OLV CLV CLV/PM Returns the contents of the specified MEMOBUS/Modbus communications register when responding to the master device.	0042 (U1-03) (0000 - FFFF)

■ H5-28: Function 5A Register 4 Selection

No. (Hex.)	Name	Description	Default (Range)
H5-28 (158C) RUN	Function 5A Register 4 Selection	V/f OLV CLV CLV/PM Returns the contents of the specified MEMOBUS/Modbus communications register when responding to the master device.	0049 (U1-10) (0000 - FFFF)

12.9 L: Protection Functions

L parameters set these functions:

- Motor Overload Protection
- Undervoltage Detection
- Stall Prevention
- Speed Detection
- Automatic Fault Reset
- Detection of Overtorque/Undertorque
- Torque Limit
- Hardware Protection

◆ L1: Motor Protection

L1 parameters set the motor overload protection function.

■ Motor Protection Using Positive Temperature Coefficient (PTC) Thermistors

The temperature resistance characteristics of three PTC thermistors in the motor stator winding protect the motor from overheat.

The PTC thermistor must have the characteristics shown in Figure 12.46 for each motor phase.

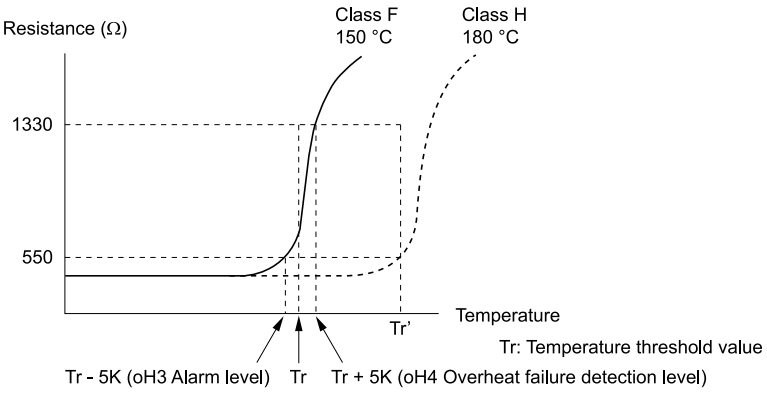

Figure 12.46 PTC Thermistor Temperature and Resistance

If the PTC input signal input to the drive is more than the overload alarm level, the drive detects *oH3 [Motor Overheat (PTC Input)]*. The drive continues the operation set in *L1-03 [Motor Thermistor oH Alarm Select]*. By factory default, *oH3* flashes on the keypad and the drive continues operation.

The overheat fault level triggers an *oH4 [Motor Overheat Fault (PTC Input)]* fault, and outputs a fault signal. The drive outputs a fault signal, and uses the stop method set in *L1-04 [Motor Thermistor oH Fault Select]* to stop the motor.

Note:

PTC is an acronym for Positive Temperature Coefficient.

Figure 12.47 shows the configuration procedure when you use terminal A3.

1. Connect the PTC thermistor input from the motor to analog input terminal A3 on the drive.

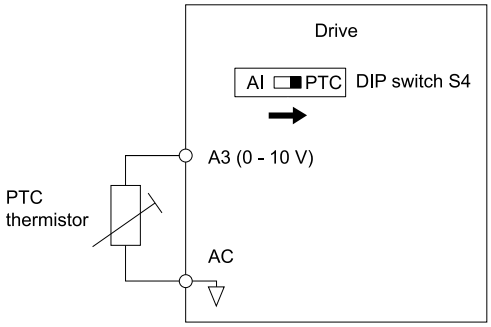

Figure 12.47 Connect Motor to PTC Thermistor Input

2. Set drive DIP switch S4 to PTC.

3. Set these MFAI terminals:
   - Set *H3-05 = 0 [Terminal A3 Signal Level Select = 0 to 10V (Lower Limit at 0)]*.
   - Set *H3-06 = E [Terminal A3 Function Selection = Motor Temperature (PTC input)]*.
4. Set these *L1 parameters*:
   - *L1-03 [Motor Thermistor oH Alarm Select]*
   - *L1-04 [Motor Thermistor oH Fault Select]*
   - *L1-05 [Motor Thermistor Filter Time]*

■ L1-01: Motor Overload (oL1) Protection

No. (Hex.)	Name	Description	Default (Range)
L1-01 (0480)	Motor Overload (oL1) Protection	V/f OLV CLV CLV/PM Sets the motor overload protection with electronic thermal protectors.	Determined by A1-02 (0 - 3, 5, 6)

Note:
- The default setting and setting range change when *A1-02 [Control Method Selection]* changes:
  - When *A1-02 = 0, 2, 3 [V/f, OLV, CLV]*, the default setting is *1*, and the setting range is *0 to 3, 6*.
  - When *A1-02 = 7 [CLV/PM]*, the default setting is *5*, and the setting range is *0, 5*.
- When only one motor is connected to a drive, set *L1-01 = 1 to 6 [Enabled]*. External thermal relays are not necessary in these conditions.

This parameter enables and disables the motor overload protection with electronic thermal protectors.

The cooling capability of the motor changes when the speed control range of the motor changes. Use an electronic thermal protector that aligns with the permitted load characteristics of the motor to select motor protection.

The electronic thermal protector of the drive uses these items to calculate motor overload tolerance and supply overload protection for the motor:

- Output current
- Output speed
- Motor thermal characteristics
- Time characteristics

If the drive detects motor overload, the drive will trigger an *oL1 [Motor Overload]* and stop the drive output.

Set *H2-01 = 1F [Term M1-M2 Function Selection = Motor Overload Alarm (oL1)]* to set a motor overload alarm. If the motor overload level is more than 90% of the *oL1* detection level, the output terminal activates and triggers an overload alarm.

0 : Disabled

1 : Variable Torque

Use this setting for general-purpose motors with a 60 Hz base frequency.

The overload tolerance decreases as motor speed decreases because the cooling fan speed decreases and the ability of the motor to cool decreases in the low speed range.

The overload tolerance characteristics of the motor change the trigger point for the electronic thermal protector. This provides motor overheat protection from low speed to high speed across the full speed range.

Load Tolerance	Cooling Capability	Overload Characteristics (at 100% motor load)
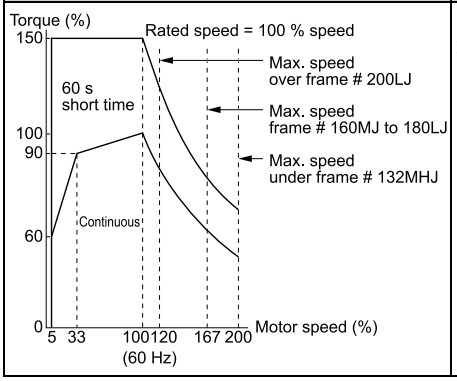	This motor is designed to operate with commercial line power. Operate at a 60 Hz base frequency to maximize the motor cooling ability.	If the motor operates at frequencies less than 60 Hz, the drive will detect *oL1*. The drive triggers a fault relay output and the motor coasts to stop.

2 : Constant Torque 10:1 Speed Range

Use this setting for drive-dedicated motors with a speed range for constant torque of 1:10.

The speed control for this motor is 10% to 100% when at 100% load. Operating slower than 10% speed at 100% load will cause motor overload.

Load Tolerance	Cooling Capability	Overload Characteristics (at 100% motor load)
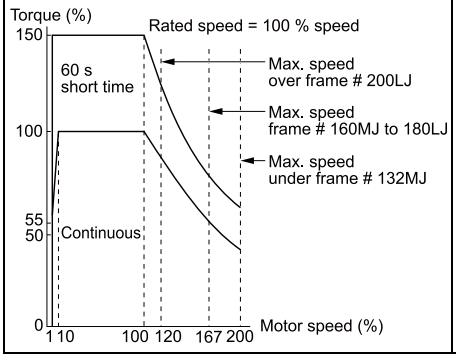	This motor is designed to withstand increased temperatures during continuous operation in the low speed range (10% base frequency).	The motor operates continuously at 10% to 100% base frequency. Operating slower than 10% speed at 100% load will cause motor overload.

3 : Constant Torque 100:1 SpeedRange

Use this setting for vector motors with a speed range for constant torque of 1:100.

The speed control for this motor is 1% to 100% when at 100% load. Operating slower than 1% speed at 100% load will cause motor overload.

Load Tolerance	Cooling Capability	Overload Characteristics (at 100% motor load)
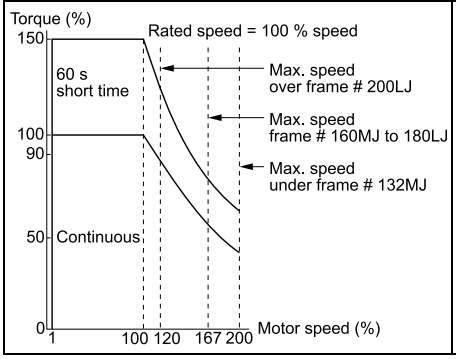	This motor is designed to withstand increased temperatures during continuous operation in the low speed range (1% base frequency).	The motor operates continuously at 1% to 100% base frequency. Operating slower than 1% speed at 100% load will cause motor overload.

5 : PM Constant Torque

Use this setting with a PM motor for constant torque that has a speed range for constant torque of 1:500.

The speed control for this motor is 0.2% to 100% when at 100% load. Operating slower than 0.2% speed at 100% load will cause motor overload.

Load Tolerance	Cooling Capability	Overload Characteristics (at 100% motor load)
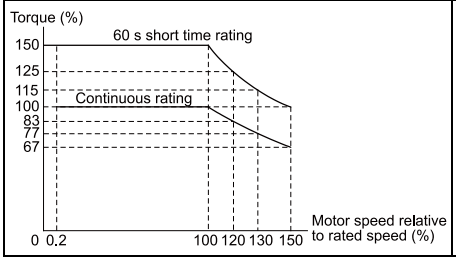	This motor is designed to withstand increased temperatures during continuous operation in the low speed range (0.2% base frequency).	The motor operates continuously at 0.2% to 100% rated speed. Operating slower than 0.2% speed at 100% load will cause motor overload.

6 : Variable Torque (50Hz)

Use this setting for general-purpose motors with a 50 Hz base frequency.

The overload tolerance decreases as motor speed decreases because the cooling fan speed decreases and the ability of the motor to cool decreases in the low speed range.

The overload tolerance characteristics of the motor change the trigger point for the electronic thermal protector. This provides motor overheat protection from low speed to high speed across the full speed range.

Load Tolerance	Cooling Capability	Overload Characteristics (at 100% motor load)
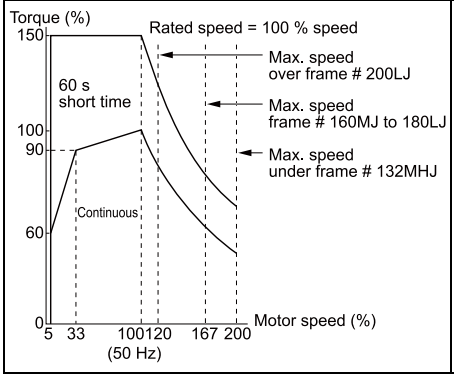	This motor is designed to operate with commercial line power. Operate at a 50 Hz base frequency to maximize the motor cooling ability.	If the motor operates at frequencies less than commercial line power, the drive will detect *oL1*. The drive triggers a fault relay output and the motor coasts to stop.

■ L1-02: Motor Overload Protection Time

No. (Hex.)	Name	Description	Default (Range)
L1-02 (0481) Expert	Motor Overload Protection Time	V/f OLV CLV CLV/PM Sets the operation time for the electronic thermal protector of the drive to prevent damage to the motor. Usually it is not necessary to change this setting.	1.0 min (0.1 - 5.0 min)

Set the overload tolerance time to the length of time that the motor can operate at 150% load from continuous operation at 100% load.

When the motor operates at 150% load continuously for 1 minute after continuous operation at 100% load (hot start), the default setting triggers the electronic thermal protector.

Figure 12.48 shows an example of the electronic thermal protector operation time. Motor overload protection operates in the range between a cold start and a hot start.

This example shows a general-purpose motor operating at the base frequency with *L1-02* set to 1.0 min.

- Cold start
  Shows the motor protection operation time characteristics when the overload occurs immediately after starting operation from a complete stop.
- Hot start
  Shows the motor protection operation time characteristics when overload occurs from continuous operation below the motor rated current.

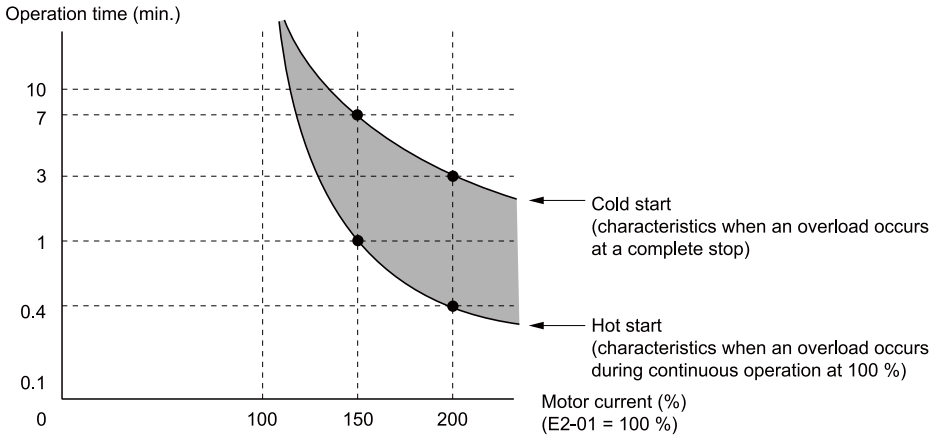

Figure 12.48 Protection Operation Time for a General-purpose Motor at Rated Output Speed

■ L1-03: Motor Thermistor oH Alarm Select

No. (Hex.)	Name	Description	Default (Range)
L1-03 (0482) Expert	Motor Thermistor oH Alarm Select	V/f OLV CLV CLV/PM Sets drive operation when the PTC input signal entered into the drive is at the *oH3 [Motor Overheat Alarm]* detection level.	3 (0 - 3)

0 : Ramp to Stop

The drive ramps the motor to stop in the deceleration ramp. Fault relay output terminal MA-MC turns ON, and MB-MC turns OFF.

1 : Coast to Stop

The output turns off and the motor coasts to stop. Fault relay output terminal MA-MC turns ON, and MB-MC turns OFF.

2 : Emergency Stop (Use C1-09)

The drive stops the motor in the deceleration ramp set in *C1-09 [Emergency Stop Ramp]*. Fault relay output terminal MA-MC turns ON, and MB-MC turns OFF.

3 : Alarm Only

The keypad shows *oH3* and the drive continues operation. The output terminal set for *Alarm [H2-01 to H2-05 = 10]* activates.

■ L1-04: Motor Thermistor oH Fault Select

No. (Hex.)	Name	Description	Default (Range)
L1-04 (0483) Expert	Motor Thermistor oH Fault Select	V/f OLV CLV CLV/PM Sets the drive operation when the PTC input signal to the drive is at the *oH4 [Motor Overheat Fault (PTC Input)]* detection level.	1 (0 - 2)

0 : Ramp to Stop

The drive ramps the motor to stop in the deceleration ramp. Fault relay output terminal MA-MC turns ON, and MB-MC turns OFF.

1 : Coast to Stop

The output turns off and the motor coasts to stop. Fault relay output terminal MA-MC turns ON, and MB-MC turns OFF.

2 : Emergency Stop (Use C1-09)

The drive stops the motor in the deceleration ramp set in *C1-09 [Emergency Stop Ramp]*. Fault relay output terminal MA-MC turns ON, and MB-MC turns OFF.

■ L1-05: Motor Thermistor Filter Time

No. (Hex.)	Name	Description	Default (Range)
L1-05 (0484) Expert	Motor Thermistor Filter Time	V/f OLV CLV CLV/PM Sets the primary delay time constant for the PTC input signal entered to the drive. This parameter prevents accidental motor overheat faults.	0.20 s (0.00 - 10.00 s)

■ L1-08: oL1 Current Level for Motor 1

No. (Hex.)	Name	Description	Default (Range)
L1-08 (1103) Expert	oL1 Current Level for Motor 1	V/f OLV CLV CLV/PM Sets the reference current for the motor 1 thermal overload detection. When the current level > 0.0 A, you cannot set this value < 10% of the continuous rated output current.	0.0 A (0.0 - 2250.0 A)

When *L1-08 = 0.0 A*, the drive uses *E2-01 [Motor Rated Current (FLA)]* to detect the motor overload protection. In PM control mode, the drive uses *E5-03 [PM Motor Rated Current (FLA)]* to detect the motor overload protection.

When *L1-08 ≠ 0.0 A*, the set value is the reference for motor overload protection.

Note:
- The display units are different for different models:
  – Models 2022 to 2041, 4012 to 4023: 0.01 A
  – Models 2059 to 2519, 4030 to 4380: 0.1 A
- When the current level > 0.0 A, you cannot set this value < 10% of the continuous rated output current.

■ L1-13: Motor Overload Memory Selection

No. (Hex.)	Name	Description	Default (Range)
L1-13 (046D)	Motor Overload Memory Selection	V/f OLV CLV CLV/PM Sets the function to keep the current electronic thermal protector value when the drive stops receiving power.	1 (0, 1)

0 : Disabled

1 : Enabled

Sets if the drive will calculate the motor again when the drive is energized again.

◆ L2: Undervoltage Detection

L2 parameter sets the *Uv1 [DC Bus Undervoltage]* detection level.

■ L2-05: Undervoltage Detection Lvl (Uv1)

No. (Hex.)	Name	Description	Default (Range)
L2-05 (0489) Expert	Undervoltage Detection Lvl (Uv1)	V/f OLV CLV CLV/PM Sets the voltage at which a *Uv1 [DC Bus Undervoltage]* fault is triggered. Usually it is not necessary to change this setting.	Determined by o2-04 and E1-01 (200 V Class: 150 - 210 V, 400 V Class: 300 - 420 V)

NOTICE **Damage to Equipment**

When you set this parameter to a value lower than the default, you must install an AC reactor on the input side of the power supply.
If you do not install an AC reactor, it will cause damage to the drive circuitry.

◆ L3: Stall Prevention

L3 parameters set the Stall Prevention function and overvoltage suppression function.

■ Stall Prevention

If the load is too heavy or the acceleration and deceleration ramps are too fast, the motor can slip too much because it cannot work at the same rate as the speed reference. If the motor stalls during acceleration, current increases as the slip increases to cause an *oC [Overcurrent]*, *oL2 [Drive Overload]*, or *oL1 [Motor Overload]* and the drive will stop. If the motor stalls during deceleration, too much regenerative power will flow back into the DC bus capacitors, and cause the drive to detect an *ov [Overvoltage]* fault and stop.

The stall prevention function will let the motor get to the set speed without stalling and it is not necessary for you to change the acceleration or deceleration ramp settings. You can set a separate stall prevention functions for acceleration, operating at constant speeds, and deceleration.

■ L3-01: Stall Prevention during Accel

No. (Hex.)	Name	Description	Default (Range)
L3-01 (048F) Expert	Stall Prevention during Accel	V/f OLV CLV CLV/PM Sets the method of the Stall Prevention During Acceleration.	1 (0, 1, 3)

Stall prevention during acceleration prevents the stalling and stopping of motors when the drive detects *oC [Overcurrent]*, *oL2 [Drive Overload]*, or *oL1 [Motor Overload]* when you apply a large load during acceleration or when you set sudden acceleration ramps related to load inertia.

0 : Disabled

The Stall Prevention function does not operate during acceleration, and acceleration occurs for the set acceleration ramp. If the acceleration ramp is too fast and the motor does not fully accelerate during the set time, it will cause the drive to detect *oL1* or *oL2* and the motor will stop.

1 : Enabled

Enables the Stall Prevention During Acceleration function. Operation is different for different control methods.

When the output current is more than the value set in *L3-02 [Stall Prevent Level during Accel]*, the drive stops acceleration. The drive stops deceleration when the output current is less than *L3-02* - 15%. The Stall Prevention function level automatically decreases for constant output ranges.

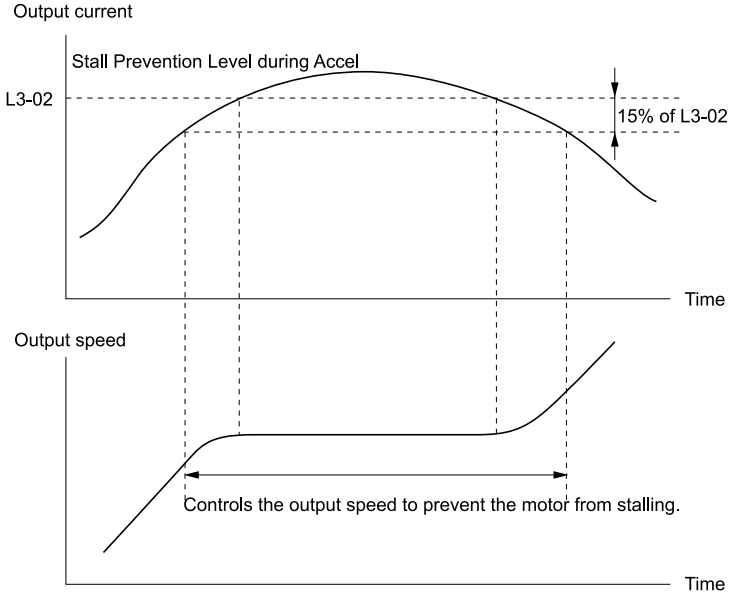

Figure 12.49 Stall Prevention During Acceleration when Using Induction Motors

3 : Current Limit Method

This function uses the *L3-02* value to limit the output current and automatically adjust the acceleration rate. When the load (output current) increases to more than the current limit level during acceleration, the drive automatically adjusts the acceleration rate.

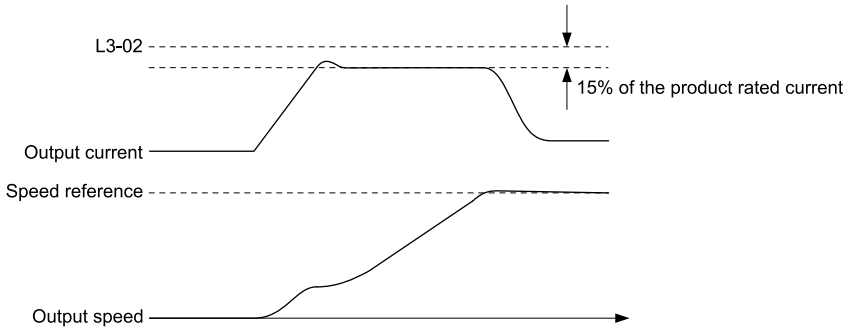

Figure 12.50 Current Limit Acceleration

■ L3-02: Stall Prevent Level during Accel

No. (Hex.)	Name	Description	Default (Range)
L3-02 (0490) Expert	Stall Prevent Level during Accel	V/f OLV CLV CLV/PM Sets the output current level to activate the Stall Prevention function during acceleration as a percentage of the continuous rated output current.	Determined by L8-38 (0 - 171%)

Note:

If you use a motor that is small compared to the drive and the motor stalls, decrease the setting value.

■ L3-05: Stall Prevention during RUN

No. (Hex.)	Name	Description	Default (Range)
L3-05 (0493) Expert	Stall Prevention during RUN	V/f OLV CLV CLV/PM Sets the function to enable and disable Stall Prevention During Run.	1 (0 - 2)

Stall Prevention function during run prevents the motor from stalling by automatically reducing the speed when an *oL1 [Motor Overload]* occurs while the motor is running at constant speed.

Note:

An output speed lower than 6 Hz will disable Stall Prevention during Run. The *L3-05* and *L3-06 [Stall Prevent Level during Run]* settings do not have an effect.

0 : Disabled

The drive runs at the set speed reference. A heavy load can cause the drive to detect *oC [Overcurrent]* or *oL1* and stall the motor.

1 : Deceleration Ramp 1 (C1-02)

The drive will decelerate at deceleration ramp set in *C1-02 [Deceleration Ramp 1]* when the current is more than the Stall Prevention level set in *L3-06*. When the current level is less than the "*L3-06* setting value - 2%" for 100 ms, the drive accelerates again at the active acceleration ramp until it reaches the set speed reference.

2 : Deceleration Ramp 2 (C1-04)

This setting functions the same as *Setting 1 [Deceleration Ramp 1 (C1-02)]*. When the Stall Prevention function is enabled, the drive decelerates with the value set in *C1-04 [Deceleration Ramp 2]*.

■ L3-06: Stall Prevent Level during Run

No. (Hex.)	Name	Description	Default (Range)
L3-06 (0494) Expert	Stall Prevent Level during Run	V/f OLV CLV CLV/PM Sets the output current level to enable the Stall Prevention function during operation as a percentage of the continuous rated output current.	Determined by L8-38 (30 - 171%)

Note:

This parameter is applicable when *L3-05 = 1, 2 [Stall Prevention during RUN = Deceleration Ramp 1 (C1-02), Deceleration Ramp 2 (C1-04)]*.

◆ L4: Speed Detection

L4 parameters set the output of signals to the MFDO terminals, for example speed agree and speed detection. The drive detects motor speed in CLV or CLV/PM control methods.

■ L4-01: Speed Agree Detection Level

No. (Hex.)	Name	Description	Default (Range)
L4-01 (0499) Expert	Speed Agree Detection Level	V/f OLV CLV CLV/PM Sets the level to detect speed agree or motor speed when *H2-01 to H2-05 = 2, 3, 4, 5 [MFDO Function Selection = Speed Agree 1, User-Set Speed Agree 1, Speed Detection 1, Speed Detection 2]*.	0.0% (0.0 - 100.0%)

■ L4-02: Speed Agree Detection Width

No. (Hex.)	Name	Description	Default (Range)
L4-02 (049A) Expert	Speed Agree Detection Width	V/f OLV CLV CLV/PM Sets the width to detect speed agree or motor speed when *H2-01 to H2-05 = 2, 3, 4, 5 [MFDO Function Selection = Speed Agree 1, User-Set Speed Agree 1, Speed Detection 1, Speed Detection 2]*.	4.0% (0.0 - 40.0%)

■ L4-03: Speed Agree Detection Level(+/-)

No. (Hex.)	Name	Description	Default (Range)
L4-03 (049B) Expert	Speed Agree Detection Level(+/-)	V/f OLV CLV CLV/PM Sets the speed agree detection level or motor speed detection level when *H2-01 to H2-05 = 13, 14, 15, 16 [MFDO Function Selection = Speed Agree 2, User-Set Speed Agree 2, Speed Detection 3, Speed Detection 4]*.	0.0% (-100.0 - +100.0%)

■ L4-04: Speed Agree Detection Width(+/-)

No. (Hex.)	Name	Description	Default (Range)
L4-04 (049C) Expert	Speed Agree Detection Width(+/-)	V/f OLV CLV CLV/PM Sets the width to detect speed agree or motor speed when *H2-01 to H2-05 = 13, 14, 15, 16 [MFDO Function Selection = Speed Agree 2, User-Set Speed Agree 2, Speed Detection 3, Speed Detection 4]*.	4.0% (0.0 - 40.0%)

■ L4-05: Spd Ref Loss Detection Selection

No. (Hex.)	Name	Description	Default (Range)
L4-05 (049D) Expert	Spd Ref Loss Detection Selection	V/f OLV CLV CLV/PM Sets the operation when the drive detects a loss of speed reference.	0 (0, 1)

Enables the detection of a loss of an analog speed reference when the speed reference is input from the MFAI terminals (A1, A2, and A3).

If the speed reference is less than 10% in 400 ms, the drive detects speed reference loss.

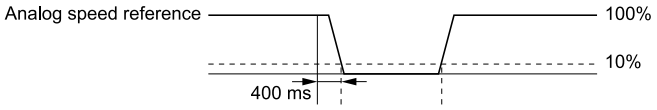

Figure 12.51 Detection of Speed Reference Loss

0 : Stop

The drive follows the speed reference and stops the motor.

1 : Run at (L4-06 x Last Reference)

The drive continues to operate at the speed reference value set in *L4-06 [Speed Reference @Loss of Ref]*. When you return the external speed reference value, the drive continues to operate with the speed reference.

■ L4-06: Speed Reference @Loss of Ref

No. (Hex.)	Name	Description	Default (Range)
L4-06 (04C2) Expert	Speed Reference @Loss of Ref	V/f OLV CLV CLV/PM Sets the speed reference as a percentage to continue drive operation after it detects a speed reference loss. The value is a percentage of the speed reference before the drive detected the loss.	80.0% (0.0 - 100.0%)

Set *L4-05 = 1 [Spd Ref Loss Detection Selection = Run at (L4-06 x Last Reference)]* to enable this parameter.

■ L4-07: Speed Agree Detection Selection

No. (Hex.)	Name	Description	Default (Range)
L4-07 (0470) Expert	Speed Agree Detection Selection	V/f OLV CLV CLV/PM Sets the condition that activates speed detection.	0 (0, 1)

0 : No Detection during Baseblock

Detects the speed while the drive is operating. When the drive turns off its output, it will not detect speed.

1 : Detection Always Enabled

■ L4-13: Door Zone Level

No. (Hex.)	Name	Description	Default (Range)
L4-13 (04F6) Expert	Door Zone Level	V/f OLV CLV CLV/PM Sets the speed level for the elevator door to open. When the elevator car decelerates to the speed level set in this parameter, an MFDO terminal set for *H2-xx = 52 [MFDO Function Selection = Door Zone]* will be active.	0.0% (0.0 - 100.0%)

The drive outputs the *Door Zone* signal when the soft starter output < *L4-13* during deceleration.

◆ L5: Automatic Fault Reset

The Automatic Fault Reset function tries to keep machines operating when the drive detects a transient fault.

The drive can do a self-diagnostic check and continue the operation after a fault. When the self-diagnostic check does not show any faults, the drive will reset faults automatically and it will be ready to restart. The motor will not stop and the drive will not record a fault history. Use *L5-02 [Fault Output during Auto Reset]* to select the operation of fault relay signals during Automatic Fault Reset operation.

⚠ WARNING Sudden Movement Hazard

Do not use the Automatic Fault Reset function when the application must not automatically recover after an error.
Incorrect application of the function can cause serious injury or death.

The drive automatically resets these faults:

Table 12.28 List of Faults during which Automatic Fault Reset is Available

Fault	Name
GF	Ground Fault
LF	Output Phase Loss
oC	Overcurrent
oH1	Heatsink Overheat
oL1	Motor Overload
oL2	Drive Overload
oL3	Overtorque Detection 1
oL4	Overtorque Detection 2

Fault	Name
ov	Overvoltage
rr	Dynamic Braking Transistor Fault
SE1	Motor Contactor Response Error
SE2	Starting Current Error
SE3	Output Current Error
UL3	Undertorque Detection 1
UL4	Undertorque Detection 2

■ Automatic Fault Reset Time Chart

Parameter *L5-01 [Number of Auto Reset Attempts]* sets the number of times that the drive will try to do Automatic Fault Reset in 10.0 s after one of the faults shown in Table 12.28. If the number of Automatic Fault Reset tries is more than the *L5-01* value in 10.0 s, drive output shuts off, and the operation stops. If this happens, remove the cause of the fault and manually restart the drive.

Figure 12.52 shows how Automatic Fault Reset works.

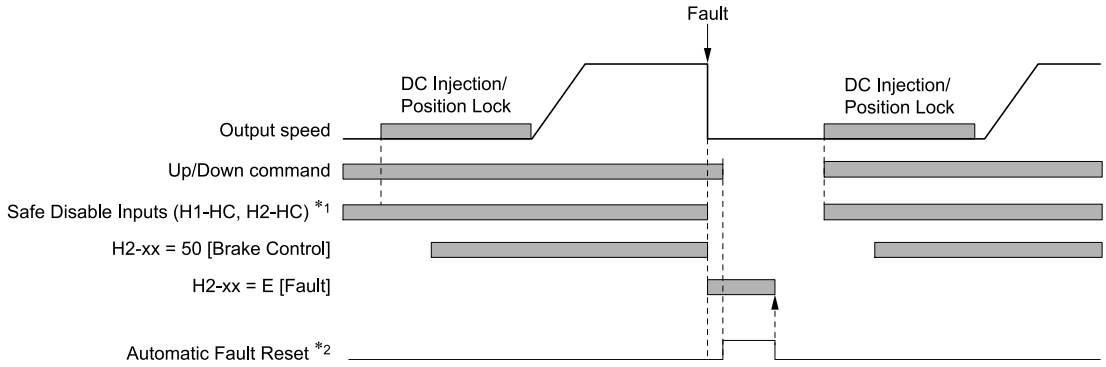

Figure 12.52 Automatic Fault Reset Time Chart

*1 Instead of Safe Disable inputs, you can also use *Baseblock Command (N.O.)* or *Baseblock Command (N.C.)* signal (*H1-xx = 8 or 9*).
*2 The drive will accept an Automatic Fault Reset signal after you remove the Up and Down commands.

Use *L5-06 [Undervoltage Fault Reset Select]* to set up Automatic Fault Reset.

To output a signal during fault reset, set one of the MFDO terminals to *H2-xx = 1E [MFDO Function Selection = Reset Enabled]*.

■ L5-01: Number of Auto Reset Attempts

No. (Hex.)	Name	Description	Default (Range)
L5-01 (049E) Expert	Number of Auto Reset Attempts	V/f OLV CLV CLV/PM Sets the number of times that the drive will try to do Automatic Fault Reset in 10.0 s.	0 (0 - 10 times)

The drive resets the number of Auto Reset attempts to 0 in these conditions:

- The drive operates correctly for 10 minutes after Automatic Fault Reset.
- When you manually clear a fault after the drive triggers protective functions.
- When you re-energize the drive.

■ L5-02: Fault Output during Auto Reset

No. (Hex.)	Name	Description	Default (Range)
L5-02 (049F) Expert	Fault Output during Auto Reset	V/f OLV CLV CLV/PM Sets the MFDO terminal set for *H2-xx = E [Fault]* to send a fault output signal when the drive tries to reset.	0 (0, 1)

0 : No fault output

1 : Fault output is set

■ L5-06: Undervoltage Fault Reset Select

No. (Hex.)	Name	Description	Default (Range)
L5-06 (0522) Expert	Undervoltage Fault Reset Select	V/f OLV CLV CLV/PM Sets the limit conditions for the number of reset attempts after a *Uv1 [DC Bus Undervoltage]* fault.	0 (0, 1)

0 : Same as L5-01 condition

1 : Always automatically reset Uv1

Automatic Fault Reset Operation in Uv1 Detection

- To activate the fault relay outputs MA-MC and MB-MC during Automatic Fault Reset, set *L5-02 = 1 [Fault Output during Auto Reset = Fault output is set]*.
- If a fault shown in Table 12.28 occurs when *L5-06 = 1*, the drive counts the number of Auto Reset attempts according to the *L5-01* setting.
- If momentary power loss occurs when *L5-06 = 1*, the drive always repeats the Automatic Fault Reset sequence as shown in Figure 12.53. If power loss occurs, use batteries to do Rescue Operation.

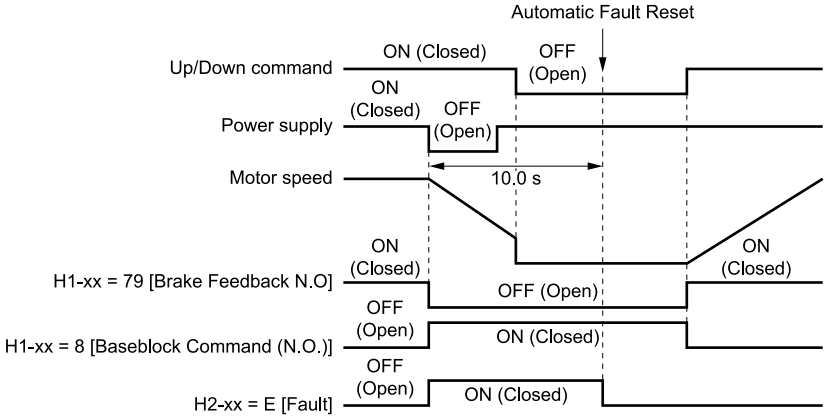

Figure 12.53 Uv1 Automatic Fault Reset Sequence

◆ L6: Torque Detection

The overtorque/undertorque detection function prevents damage to machinery and loads.

Overtorque is when there is too much load on the machine. If the motor current or output torque is at the overtorque detection level for the overtorque detection time, the drive will output an alarm and turn off the output.

Undertorque is when a load suddenly decreases. When the motor current or output torque is at the undertorque detection level for the undertorque detection time, the drive will output an alarm and turn off the output.

You can use the undertorque detection function to detect unusual operation of the electromagnetic contactor on the drive output side, for example.

Note:

If there is *oC [Overcurrent]* or *oL1 [Motor Overload]*, the drive can stop during overtorque conditions. Use torque detection to identify overload conditions on the PLC before the drive detects *oC* or *oL1* and stops. Use this function to detect issues that occur in the application.

■ Parameter Settings

You can individually set the two overtorque/undertorque detection functions with the drive. Use the information in Table 12.29 to set the parameters.

Table 12.29 Overtorque/Undertorque Detection Parameters

Configuration Parameter	Overtorque/Undertorque Detection 1	Overtorque/Undertorque Detection 2
MFDO Function Selection • Terminal M1-M2 • Terminal M3-M4 • Terminal M5-M6 • Terminal P1-C1 • Terminal P2-C2	H2-01 to H2-05 = B N.O.: Activated when detected	H2-01 to H2-05 = 18 N.O.: Activated when detected
Detection conditions and selection of operation after detection	L6-01	L6-04
Detection level	L6-02	L6-05
Detection time	L6-03	L6-06

Note:

The drive sets the Overtorque/Undertorque detection level in these conditions:
• V/f: Current level (continuous rated output current of the drive = 100%)
• OLV, CLV, CLV/PM: Motor torque (Motor rated torque = 100%)

■ Time Chart for Detection of Overtorque/Undertorque

Overtorque Detection Time Chart

When you use Overtorque/Undertorque Detection 1, the drive detects overtorque if the motor current or motor torque is at the detection level set in *L6-02 [Torque Detection Level 1]* for the time set in *L6-03 [Torque Detection Time 1]*. Parameter *L6-01 [Torque Detection Selection 1]* sets the operation after detection.

When you use Overtorque/Undertorque Detection 2, set *L6-04 [Torque Detection Selection 2]*, *L6-05 [Torque Detection Level 2]*, and *L6-06 [Torque Detection Time 2]*.

Use *H2-01 to H2-05 [MFDO Function Selection]* to set the terminal that outputs the alarm.

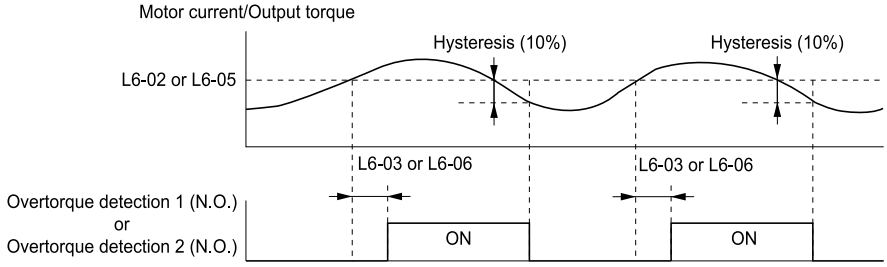

Figure 12.54 Overtorque Detection Time Chart

Note:

The drive applies a hysteresis of approximately 10% of the continuous rated output current of the drive or the motor rated torque to the overtorque/undertorque detection function.

Undertorque Detection Time Chart

When you use Overtorque/Undertorque Detection 1, the drive detects undertorque if the motor current or motor torque is less than or equal to the detection level set in *L6-02* for the time set in *L6-03*. Parameter *L6-01* sets the operation after detection.

When you use Overtorque/Undertorque Detection 2, set the operation in *L6-04, L6-05, and L6-06*.

Use *H2-01 to H2-05 [MFDO Function Selection]* to set the terminal that outputs the alarm.

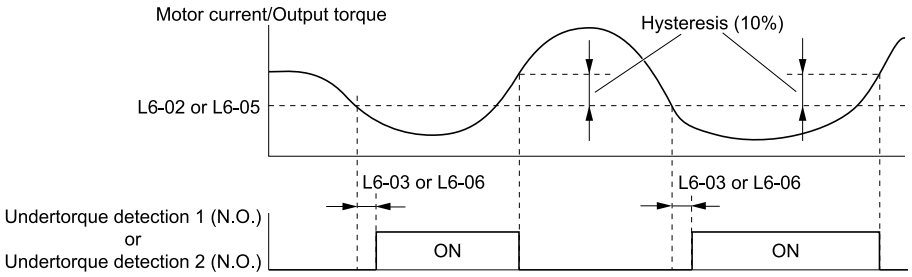

Figure 12.55 Undertorque Detection Time Chart

Note:

The drive applies a hysteresis of approximately 10% of the continuous rated output current of the drive or the motor rated torque to the overtorque/undertorque detection function.

■ L6-01: Torque Detection Selection 1

No. (Hex.)	Name	Description	Default (Range)
L6-01 (04A1) Expert	Torque Detection Selection 1	V/f OLV CLV CLV/PM Sets the torque detection conditions that will trigger an overtorque or undertorque response from the drive.	0 (0 - 8)

The drive detects overtorque if the motor current or output torque is more than the level set in *L6-02 [Torque Detection Level 1]* for the length of time set in *L6-03 [Torque Detection Time 1]*. The drive detects undertorque if the motor current or output torque is less than the level set in *L6-02* for the length the time set in *L6-03*.

0 : Disabled

The drive will not detect overtorque or undertorque.

1 : oL @ Speed Agree - Alarm only

The drive detects overtorque when the output speed aligns with the speed reference. Detection does not occur during acceleration/deceleration. The drive outputs an *oL3 [Overtorque Detection 1]* and operation continues.

2 : oL @ RUN - Alarm only

When the Up/Down command is enabled, the drive constantly detects overtorque. The drive outputs an *oL3* and operation continues.

3 : oL @ Speed Agree - Fault

The drive detects overtorque when the output speed aligns with the speed reference. Detection does not occur during acceleration/deceleration. The drive outputs an *oL3* and operation stops.

4 : oL @ RUN - Fault

When the Up/Down command is enabled, the drive constantly detects overtorque. The drive outputs an *oL3* and operation stops.

5 : UL @ Speed Agree - Alarm only

The drive detects undertorque when the output speed aligns with the speed reference. Detection does not occur during acceleration/deceleration. The drive outputs a *UL3 [Undertorque Detection 1]* and operation continues.

6 : UL @ RUN - Alarm only

When the Up/Down command is enabled, the drive constantly detects undertorque. The drive outputs a *UL3* and operation continues.

7 : UL @ Speed Agree - Fault

The drive detects undertorque when the output speed aligns with the speed reference. Detection does not occur during acceleration/deceleration. The drive outputs a *UL3* and operation stops.

8 : UL @ RUN - Fault

When the Up/Down command is enabled, the drive constantly detects undertorque. The drive outputs a *UL3* and operation stops.

■ L6-02: Torque Detection Level 1

No. (Hex.)	Name	Description	Default (Range)
L6-02 (04A2) Expert	Torque Detection Level 1	V/f OLV CLV CLV/PM Sets the detection level for Overtorque/Undertorque Detection 1. In V/f control, continuous rated output current of the drive = 100% value. In vector control, motor rated torque = 100% value.	171% (0 - 300%)

■ L6-03: Torque Detection Time 1

No. (Hex.)	Name	Description	Default (Range)
L6-03 (04A3) Expert	Torque Detection Time 1	V/f OLV CLV CLV/PM Sets the detection time for Overtorque/Undertorque Detection 1.	0.1 s (0.0 - 10.0 s)

■ L6-04: Torque Detection Selection 2

No. (Hex.)	Name	Description	Default (Range)
L6-04 (04A4) Expert	Torque Detection Selection 2	V/f OLV CLV CLV/PM Sets the speed range that detects overtorque and undertorque and the operation of drives (operation status) after detection.	0 (0 - 8)

The drive detects overtorque if the motor current or output torque is more than the level set in *L6-05 [Torque Detection Level 2]* for the length of time set in *L6-06 [Torque Detection Time 2]*. The drive detects undertorque if the motor current or output torque is less than the level set in *L6-05* for the length the time set in *L6-06*.

0 : Disabled

The drive will not detect overtorque or undertorque.

1 : oL @ Speed Agree - Alarm only

The drive detects overtorque when the output speed aligns with the speed reference. Detection does not occur during acceleration/deceleration. The drive outputs an *oL4 [Overtorque Detection 2]* and operation continues.

2 : oL @ RUN - Alarm only

When the Up/Down command is enabled, the drive constantly detects overtorque. The drive outputs an *oL4* and operation continues.

3 : oL @ Speed Agree - Fault

The drive detects overtorque when the output speed aligns with the speed reference. Detection does not occur during acceleration/deceleration. The drive outputs an *oL4 [Overtorque Detection 2]* and operation stops.

4 : oL @ RUN - Fault

When the Up/Down command is enabled, the drive constantly detects overtorque. The drive outputs an *oL4* and operation stops.

5 : UL @ Speed Agree - Alarm only

The drive detects undertorque when the output speed aligns with the speed reference. Detection does not occur during acceleration/deceleration. The drive outputs a *UL4 [Undertorque Detection 2]* and operation continues.

6 : UL @ RUN - Alarm only

When the Up/Down command is enabled, the drive constantly detects undertorque. The drive outputs a *UL4* and operation continues.

7 : UL @ Speed Agree - Fault

The drive detects undertorque when the output speed aligns with the speed reference. Detection does not occur during acceleration/deceleration. The drive outputs a *UL4* and operation stops.

8 : UL @ RUN - Fault

When the Up/Down command is enabled, the drive constantly detects undertorque. The drive outputs a *UL4* and operation stops.

■ L6-05: Torque Detection Level 2

No. (Hex.)	Name	Description	Default (Range)
L6-05 (04A5) Expert	Torque Detection Level 2	V/f OLV CLV CLV/PM Sets the detection level for Overtorque/Undertorque Detection 2. In V/f control, continuous rated output current of the drive = 100% value. In vector control, motor rated torque = 100% value.	171% (0 - 300%)

■ L6-06: Torque Detection Time 2

No. (Hex.)	Name	Description	Default (Range)
L6-06 (04A6) Expert	Torque Detection Time 2	V/f OLV CLV CLV/PM Sets the detection time for Overtorque/Undertorque Detection 2.	0.1 s (0.0 - 10.0 s)

◆ L7: Torque Limit

The torque limit function limits the internal torque reference for the drive to limit the quantity of torque generated by the motor to a constant quantity. This function keeps the torque applied to loads and regenerative torque less than a set quantity. This function also prevents damage to machinery and increases the reliability of continuous

operation. You can set torque limits individually for the four quadrants, which include torque direction (motoring/regeneration) and direction of motor rotation (forward/reverse). When the torque reference value is at the set torque limit, the MFDO terminal set for *H2-xx = 30 [During Torque Limit]* activates.

Note:
- The drive output current limits maximum output torque. The drive limits torque to 150% of the continuous rated output current. The actual output torque is not more than the limit of the continuous rated output current when you set the torque limit to a high value.
- When you use torque limits for lifting applications, do not lower the torque limit value too much. When the torque limit function is triggered, falls and rollbacks can occur because of sudden acceleration stops and stalls of the motor.

■ Configuring Settings

Use one of these methods to set torque limits:

- Individually set the four torque limit quadrants using *L7-01 to L7-04 [Torque Limit]*.
- Use a communication option to set all four torque limit quadrants together.

Figure 12.56 shows the configuration method for each quadrant.

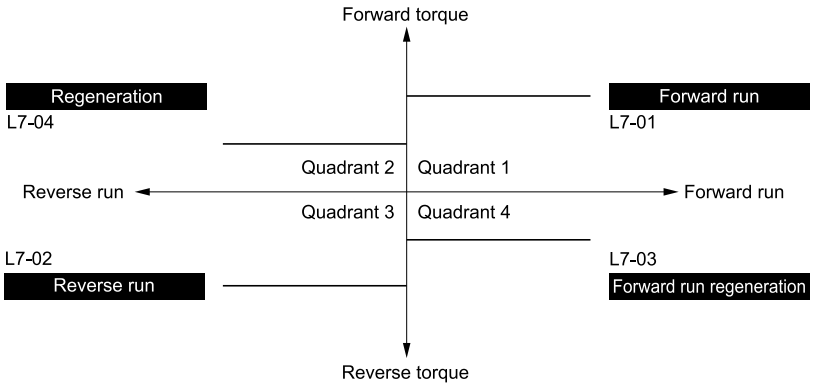

Figure 12.56 Torque Limits and Analog Input Setting Parameters

Note:
- When *L7-01 to L7-04* and analog inputs or communication option torque limits set torque limits for the same quadrant, the drive enables the lower value.
  In this example of parameter settings, the torque limit for quadrant 1 is 130% and the torque limit for quadrants 2, 3, and 4 is 150%.
  Settings: *L7-01 = 130%*, *L7-02 to L7-04 = 200%*, and MFAI torque limit = 150%
- The drive output current limits maximum output torque. The drive limits torque to 150% of the continuous rated output current. The actual output torque is not more than the limit of the continuous rated output current when you set the torque limit to a high value.

■ L7-01: Forward Torque Limit

No. (Hex.)	Name	Description	Default (Range)
L7-01 (04A7) RUN Expert	Forward Torque Limit	V/f OLV CLV CLV/PM Sets the torque limit value for forward motoring as a percentage, where motor rated torque is the 100% value.	200% (0 - 300%)

Note:
- You must think about drive capacity when a large quantity of torque is necessary. If you set the value too high, the drive can detect *oC [Overcurrent]*.
- If you set the value too low with large loads, the motor can stall.

■ L7-02: Reverse Torque Limit

No. (Hex.)	Name	Description	Default (Range)
L7-02 (04A8) RUN Expert	Reverse Torque Limit	V/f OLV CLV CLV/PM Sets the torque limit value for reversed motoring as a percentage, where motor rated torque is the 100% value.	200% (0 - 300%)

Note:
- You must think about drive capacity when a large quantity of torque is necessary. If you set the value too high, the drive can detect *oC [Overcurrent]*.
- If you set the value too low with large loads, the motor can stall.

■ L7-03: Forward Regenerative Trq Limit

No. (Hex.)	Name	Description	Default (Range)
L7-03 (04A9) RUN Expert	Forward Regenerative Trq Limit	V/f OLV CLV CLV/PM Sets the torque limit value for forward regenerative conditions as a percentage of the motor rated torque.	200% (0 - 300%)

Note:
- You must think about drive capacity when a large quantity of torque is necessary. If you set the value too high, the drive can detect *oC [Overcurrent]*.
- If you set the value too low with large loads, the motor can stall.

■ L7-04: Reverse Regenerative Trq Limit

No. (Hex.)	Name	Description	Default (Range)
L7-04 (04AA) RUN Expert	Reverse Regenerative Trq Limit	V/f OLV CLV CLV/PM Sets the torque limit value for reversed regenerative conditions as a percentage of the motor rated torque.	200% (0 - 300%)

Note:
- You must think about drive capacity when a large quantity of torque is necessary. If you set the value too high, the drive can detect *oC [Overcurrent]*.
- If you set the value too low with large loads, the motor can stall.

■ L7-16: Torque Limit Process at Start

No. (Hex.)	Name	Description	Default (Range)
L7-16 (044D) Expert	Torque Limit Process at Start	V/f OLV CLV CLV/PM Assigns a time filter that lets the torque limit build at start.	1 (0, 1)

0 : Disabled

There is torque limit at start without a delay time.

Use this setting to maximize the response time when sudden acceleration or deceleration at start is necessary.

1 : Enabled

There is a delay time of 64 ms at start to build the torque limit.

◆ L8: Drive Protection

L8 parameters set protective functions that prevent faults such as overheating, phase loss, and ground faults.

■ L8-02: Overheat Alarm Level

No. (Hex.)	Name	Description	Default (Range)
L8-02 (04AE) Expert	Overheat Alarm Level	V/f OLV CLV CLV/PM Sets the *oH* detection level in temperature.	Determined by o2-04 (50 - 150 °C)

If the heatsink temperature is more than the temperature set in this parameter, the drive detects an overheat pre-alarm. To enable this function, set one of *H2-01 to H2-05 = 20 [MFDO Function Selection = Drive Overheat Pre-Alarm (oH)]*.

If the temperature increases to the overheat fault level, the drive will trigger an *oH1 [Heatsink Overheat]* fault and stop operation.

■ L8-03: Overheat Pre-Alarm Selection

No. (Hex.)	Name	Description	Default (Range)
L8-03 (04AF) Expert	Overheat Pre-Alarm Selection	V/f OLV CLV CLV/PM Sets drive operation when an *oH* alarm is detected.	3 (0 - 3)

0 : Ramp to Stop

The drive ramps the motor to stop in the deceleration ramp. Fault relay output terminal MA-MC turns ON, and MB-MC turns OFF.

1 : Coast to Stop

The output turns off and the motor coasts to stop. Fault relay output terminal MA-MC turns ON, and MB-MC turns OFF.

2 : Emergency Stop (Use C1-09)

The drive stops the motor in the deceleration ramp set in *C1-09 [Emergency Stop Ramp]*. Fault relay output terminal MA-MC turns ON, and MB-MC turns OFF.

3 : Alarm Only

The keypad shows *oH* and the drive continues operation. The output terminal set for *Alarm [H2-01 to H2-05 = 10]* activates.

■ L8-05: Input Phase Loss Protection Sel

No. (Hex.)	Name	Description	Default (Range)
L8-05 (04B1)	Input Phase Loss Protection Sel	V/f OLV CLV CLV/PM Sets the function to enable and disable input phase loss detection.	Determined by o2-04 (0 - 3)

0 : Disabled

1 : Enabled

2 : Enable During Run

3 : Enable at Constant Speed

The drive measures ripples in DC bus voltage to detect input phase loss. When the drive detects input phase loss, the motor coasts to stop.

The drive detects phase loss when power supply phase loss occurs or the main circuit capacitor becomes unusable, which causes *PF [Input Phase Loss]* to show on the keypad.

Disable the detection of the input power supply phase loss function in these conditions:

- The output current is less than 30% of the continuous rated output current of the drive.
- One of the input terminals set for *H1-xx = 55 [MFDI Function Selection = Rescue Operation]* is activated.

■ L8-06: Input Phase Loss Detection Level

No. (Hex.)	Name	Description	Default (Range)
L8-06 (04B2) Expert	Input Phase Loss Detection Level	V/f OLV CLV CLV/PM Sets the level for input phase loss detection when there is a ripple in the DC bus. The drive detects *PF [Input Phase Loss]* if the difference between the maximum and the minimum values of the voltage ripple > *L8-06*.	Determined by o2-04 (0.0 - 50.0%)

Detection level = 100% = Voltage class × √2

■ L8-07: Output Phase Loss Protection Sel

No. (Hex.)	Name	Description	Default (Range)
L8-07 (04B3)	Output Phase Loss Protection Sel	V/f OLV CLV CLV/PM Sets the function to enable and disable output phase loss detection. The drive detects *LF [Output Phase Loss]* if there is a phase loss on one (or more than one) of the U, V, or W phases on the output side.	0 (0, 1)

Note:

- The drive can incorrectly start output phase loss detection in these conditions:
  - –The motor rated current is very small compared to the drive rating.
  - –The drive is operating a PM motor with a small load.
- When *L8-07 = 1*, set these parameters:
  - –*S1-02 [DC Injection Current at Start]* > 15% (when *A1-02 = 0, 2 [Conrtol Method Selection = V/f or OLV]*)
  - –*S1-04 [DC Inj/Pos LockTime at Start]* > 100 ms

  If you set these parameters incorrectly, the drive can incorrectly start output phase loss detection.

0 : Disabled

1 : Enabled

If the drive loses one or more output phases, it will trigger *LF*.
The output turns off and the motor coasts to stop.

■ L8-09: Output Ground Fault Detection

No. (Hex.)	Name	Description	Default (Range)
L8-09 (04B5) Expert	Output Ground Fault Detection	V/f OLV CLV CLV/PM Sets the function to enable and disable ground fault protection.	Determined by o2-04 (0, 1)

0 : Disabled

The drive will not detect ground faults.

1 : Enabled

If there is high leakage current or a ground short circuit in one or two output phases, the drive will detect *GF [Ground Fault]*.

Note:

If the ground path impedance is low, the drive can detect *oC [Overcurrent]*, *SC [Short Circuit/IGBT Failure]*, or *ov [Overvoltage]* instead of *GF*.

■ L8-10: Heatsink Fan Operation Selection

No. (Hex.)	Name	Description	Default (Range)
L8-10 (04B6)	Heatsink Fan Operation Selection	V/f OLV CLV CLV/PM Sets operation of the heatsink cooling fan.	0 (0 - 2)

0 : During Run, w/ L8-11 Off-Delay

The drive turns on the fan when an Up/Down command is active.

When you release the Up/Down command and the delay time set in *L8-11 [Heatsink Fan Off-Delay Time]* is expired, the fan stops. This setting extends the fan lifetime.

1 : Always On

The fan turns on when you supply power to the drive.

2 : Temperature-Dependent Fan Ctrl.

The fan turns on when the drive detects that the main circuit is overheating.

■ L8-11: Heatsink Fan Off-Delay Time

No. (Hex.)	Name	Description	Default (Range)
L8-11 (04B7) Expert	Heatsink Fan Off-Delay Time	V/f OLV CLV CLV/PM Sets the length of time that the drive will wait before it stops the cooling fan after it cancels the Up/Down command when *L8-10 = 0 [Heatsink Fan Operation Selection = During Run, w/ L8-11 Off-Delay]*.	60 s (0 - 300 s)

■ L8-12: Ambient Temperature Setting

No. (Hex.)	Name	Description	Default (Range)
L8-12 (04B8) Expert	Ambient Temperature Setting	V/f OLV CLV CLV/PM Sets the ambient temperature of the drive installation area.	40 °C (-10 - +50 °C)

The drive automatically adjusts the continuous rated output current to the best value as specified by the set temperature. Set the ambient temperature of the area where you install the drive to a value that is more than the drive rating.

■ L8-15: Drive oL2 @ Low Speed Protection

No. (Hex.)	Name	Description	Default (Range)
L8-15 (04BB) Expert	Drive oL2 @ Low Speed Protection	V/f OLV CLV CLV/PM Sets the function to decrease the drive overload level at which the drive will trigger *oL2 [Drive Overload]* during low speed operation (6 Hz or slower) to prevent damage to the main circuit transistors.	1 (0, 1)

Note:

Contact Yaskawa or your nearest sales representative before disabling this function at low speeds. If you frequently operate drives with high output current in low speed ranges, it can cause heat stress and decrease the life span of drive IGBTs.

0 : Disabled (No Additional Derate)

The drive does not decrease the overload protection level.

1 : Enabled (Reduced oL2 Level)

When the drive detects *oL2* during low speed operation, it automatically decreases the overload detection level.

At zero speed, the drive derates the overload by 50%.

■ L8-27: Overcurrent Detection Gain

No. (Hex.)	Name	Description	Default (Range)
L8-27 (04DD) Expert	Overcurrent Detection Gain	V/f OLV CLV **CLV/PM** Sets the PM motor overcurrent detection level as a percentage of the motor rated current value.	300.0% (0.0 - 1000.0%)

Note:

- The overcurrent detection function detects the lower of these two values:
  - –Drive overcurrent level
  - –Motor rated current × *L8-27* / 100
- Set *L7-xx [Torque Limit]* parameters to a smaller value than the setting of *L8-27*.
- This function is disabled when you set *L8-27 = 0.0*. Under usual circumstances, do not set *L8-27 = 0.0*. If the continuous rated output current of the drive is much higher than the motor rated current, PM motor magnets can demagnetize when current flows at the drive overcurrent detection level.

■ L8-29: Output Unbalance Detection Sel

No. (Hex.)	Name	Description	Default (Range)
L8-29 (04DF) Expert	Output Unbalance Detection Sel	V/f OLV CLV **CLV/PM** Sets the function to detect *LF2 [Output Current Imbalance]*.	1 (0, 1)

This function prevents damage to PM motors. Current unbalance can heat a PM motor and demagnetize the magnets. When the current is unbalanced, the drive will detect *LF2* to stop the motor and prevent damage to the motor.

0 : Disabled

1 : Enabled

■ L8-35: Installation Method Selection

No. (Hex.)	Name	Description	Default (Range)
L8-35 (04EC) Expert	Installation Method Selection	**V/f OLV CLV CLV/PM** Sets the type of drive installation.	0 (0)

Note:

- Parameter *A1-03 [Initialize Parameters]* does not initialize this parameter.
- This parameter is set to the correct value when the drive is shipped.

0 : IP20/OpenChassis Enc/Ex Heatsink

Use this setting to install IP20/UL Open Type drives or when the heatsink (cooling fin) is outside the enclosure panel.

Make sure that there is 30 mm (1.18 in) minimum of space between drives or between the drive and side of the enclosure panel.

■ L8-38: Automatic Torque Boost Function

No. (Hex.)	Name	Description	Default (Range)
L8-38 (04EF)	Automatic Torque Boost Function	V/f OLV CLV CLV/PM Sets the operation of Automatic Torque Boost function. When the output current, integrated overload value, or heatsink temperature are more than a specified level, the drive increases the output current limit and decreases the carrier frequency. When you set this parameter to *0 [Disabled]* to give priority to operations with low audible noise, select a larger capacity drive to prevent insufficient torque if necessary. Usually it is not necessary to change this setting.	3 (0, 3)

When the output current is at a specified level, the drive automatically decreases the carrier frequency to the value set in *L8-39 [Reduced Carrier Frequency]*. When the drive decreases the carrier frequency, it also increases the overload tolerance, and the drive can output more torque. When the drive is stopped (in baseblock), the carrier frequency goes back to the value set in *C6-03 [Carrier Frequency]*.

The drive also automatically decreases the carrier frequency when:

- The integrated drive overload value is more than *C6-34 [Carrier Freq Reduce Start Level]*
- The drive heatsink temperature is more than a specified level

When the drive decreases the carrier frequency, the overload capacity for *oL2 [Drive Overload]* or overheat capacity for *oH [Heatsink Overheat]* increases temporarily. It lets the drive operate through transient load/temperature peaks and not trip.

0 : Disabled

The drive will not change the carrier frequency, rated current, or startup current at high loads.

If the frequency of operation or ambient temperature cause too much heat in the drive, it automatically decreases the rated current and the maximum current.

Note:

Load conditions or operation conditions can cause insufficient motor torque. Select a larger capacity drive to prevent insufficient torque if necessary.

3 : Enabled

The drive automatically decreases the carrier frequency at high loads to increase the startup current.

When the drive is hot, it also automatically decreases the carrier frequency to keep the rated current and startup current.

Note:

When the drive decreases the carrier frequency, the motor will make an audible noise.

In separate technical data, Yaskawa summarized the differences in rated current and startup current when the output frequency, setting of the Automatic Torque Boost function, or drive temperature condition change. Contact Yaskawa or your nearest sales representative for more information.

Note:

If insufficient torque or *oL2* occurs when you enable this function, decrease *L8-39 [Reduced Carrier Frequency]*.

■ L8-39: Reduced Carrier Frequency

No. (Hex.)	Name	Description	Default (Range)
L8-39 (04F0) Expert	Reduced Carrier Frequency	V/f OLV CLV CLV/PM Sets the decreased carrier frequency used by Automatic Torque Boost function.	Determined by o2-04 (2.0 - Determined by o2-04 kHz)

When *L8-38 = 3 [Automatic Torque Boost Function = Enabled]*, the drive decreases the carrier frequency to the value set in this parameter.

■ L8-55: Internal DB TransistorProtection

No. (Hex.)	Name	Description	Default (Range)
L8-55 (045F) Expert	Internal DB TransistorProtection	V/f OLV CLV CLV/PM Sets the protection function for the internal braking transistor.	1 (0 - 2)

0 : RF Disabled/BOL Disabled

Disables braking transistor protection.

Use this setting, if enabling the braking transistor can cause an *rF [Braking Resistor Fault]* in these conditions:

- With a regenerative converter, for example D1000.
- With a regenerative unit, for example R1000.
- When connecting braking resistor options to the drive, for example CDBR units.
- Without an internal braking transistor.

1 : RF Enabled/BOL Enabled

Protects internal braking transistor when using a braking transistor or optional braking resistors.

These models have a built-in braking transistor:

- 2022 to 2144
- 4012 to 4188

2 : RF Disabled/BOL Enabled

Protects internal braking transistor when using a braking transistor or optional braking resistors, but disables *rF* detection.

■ L8-88: Safe Disable Operation Mode

No. (Hex.)	Name	Description	Default (Range)
L8-88 (02F5) Expert	Safe Disable Operation Mode	V/f OLV CLV CLV/PM Sets the drive operation when the Safe Disable input is activated.	1 (0, 1)

0 : Mode 0 (Alarm-On, Ready-Off)

1 : Mode 1 (Alarm-Off, Ready-On)

When the Safe Disable Input is triggered, the keypad alarm displays and the corresponding output terminal will react as shown in Table 12.30.

Table 12.30 LED and Output Status for Each L8-88 Setting

L8-88 Setting	Safe Disable Operation Selection	Alarm Display during Safety Disable	Alarm Output (H2-xx = 10)	Drive Ready (H2-xx = 6)
0	STo	OFF	OFF	OFF
	STоF	ALM flashes	ON	OFF
1	STo	OFF	OFF	ON
	STоF	ALM flashes	OFF	ON

■ L8-89: Current Monitoring Selection

No. (Hex.)	Name	Description	Default (Range)
L8-89 (0B97) Expert	Current Monitoring Selection	V/f OLV CLV CLV/PM Sets the Current Monitoring function.	0 (0, 1)

0 : Disabled

1 : Enabled

The drive will add the *L8-99 [Current Monitoring Level]* setting to the conditions required to deactivate the *Output Contactor Control* command (*H2-xx = 51*) at stop.

■ L8-99: Current Monitoring Level

No. (Hex.)	Name	Description	Default (Range)
L8-99 (0B98) Expert	Current Monitoring Level	V/f OLV CLV CLV/PM Sets the current monitoring level as a percentage of the continuous rated output current.	10.0% (0.0 - 50.0%)

When *L8-89 = 1 [Current Monitoring Selection = Enabled]*, the *Output Contactor Control* command (*H2-xx = 51*) deactivates when the output current is equal to or below the set level. The drive will also use this parameter to activate the MFDO terminal set for *H2-xx = 5C [Motor Current Monitor]*.

12.10 n: Special Adjustment

n parameters set these functions:

- Hunting Prevention
- Automatic Frequency Regulator (AFR) Control
- Feed Forward Control
- Online tuning function for motor line-to-line resistance
- PM motor control functions

◆ n1: Hunting Prevention

The Hunting Prevention function will not let low inertia or operation with a light load cause hunting. Hunting frequently occurs when you have a high carrier frequency and an output speed less than 30 Hz.

■ n1-01: Hunting Prevention Selection

No. (Hex.)	Name	Description	Default (Range)
n1-01 (0580) Expert	Hunting Prevention Selection	V/f OLV CLV CLV/PM Sets the function to prevent hunting.	2 (0 - 2)

When drive response is more important than the decrease of motor vibration, disable this function.

If hunting occurs, or if you use a high carrier frequency or SwingPWM, set this parameter to 2 for better hunting prevention.

0 : Disabled

1 : Enabled (Normal)

2 : Enabled (High Carrier Frequency)

■ n1-08: Current Detection Method

No. (Hex.)	Name	Description	Default (Range)
n1-08 (1105) Expert	Current Detection Method	V/f OLV CLV CLV/PM Sets how the drive decreases the motor vibration that is caused by leakage current. Usually it is not necessary to change this setting.	1 (0, 1)

0 : 2-Phases

1 : 3-Phases

Note:

Set this parameter to 1 to decrease motor vibrations caused by leakage current when the wiring distance is long.

■ n1-16: Hunting Prevention High Fc Gain

No. (Hex.)	Name	Description	Default (Range)
n1-16 (0BFB) Expert	Hunting Prevention High Fc Gain	V/f OLV CLV CLV/PM Sets the gain for the hunting prevention function. This parameter functions best with a high carrier frequency. Usually it is not necessary to change this setting.	0.50 (0.00 - 2.50)

Set *n1-01 = 2 [Hunting Prevention Selection = Enabled (High Carrier Frequency)]* to enable this function.

If the motor oscillates, set *n1-01 = 2*. If that does not have an effect, increase this parameter in 0.2-unit increments.

■ n1-17: Hunting Prevent High Fc Filter

No. (Hex.)	Name	Description	Default (Range)
n1-17 (0BFC) Expert	Hunting Prevent High Fc Filter	V/f OLV CLV CLV/PM Sets the responsiveness of the hunting prevention function. Usually it is not necessary to change this setting.	500 ms (0 - 1000 ms)

When *n1-01 = 2 [Hunting Prevention Selection = Enabled (High Carrier Frequency)]*, if the motor stalls when the load changes, decrease the value set in this parameter in 100 ms decrements.

If you set *n1-01 = 2* and you cannot suppress hunting, increase the value set in this parameter in 100 ms increments.

◆ n2: Auto Freq Regulator (AFR)

The speed feedback detection reduction function (or AFR: Automatic Frequency Regulator) helps the speed become stable when you suddenly apply or remove a load.

Note:

Before you change *n2-xx parameters*, do one of these procedures:
- Set the motor parameters and V/f pattern correctly.
- Do Rotational Auto-Tuning.

■ n2-01: Automatic Freq Regulator Gain

No. (Hex.)	Name	Description	Default (Range)
n2-01 (0584) Expert	Automatic Freq Regulator Gain	V/f OLV CLV CLV/PM Sets the gain of the AFR function as a magnification value. Usually it is not necessary to change this setting.	1.00 (0.00 - 10.00)

Adjust this parameter in these conditions:

- If there is hunting or oscillation with a light load, increase the setting value in 0.05-unit increments and examine the response.
- If torque is not sufficient with a heavy load or if you must increase torque or speed responsiveness, decrease the setting value in 0.05-unit increments and examine the response.

■ n2-02: Automatic Freq Regulator Time 1

No. (Hex.)	Name	Description	Default (Range)
n2-02 (0585) Expert	Automatic Freq Regulator Time 1	V/f OLV CLV CLV/PM Sets the time constant that sets the rate of change for the AFR function. Usually it is not necessary to change this setting.	50 ms (0 - 2000 ms)

Adjust this parameter in these conditions:

- If there is hunting or oscillation with a light load, increase the setting value in 50 ms increments and examine the response. If the load inertia is large, increase the setting value in 50 ms increments and examine the response.
- If torque is not sufficient with a heavy load or if you must increase torque or speed responsiveness, decrease the setting value in 10 ms increments and examine the response.

Note:
- Set *n2-02 ≤ n2-03 [Automatic Freq Regulator Time 2]*. If *n2-02 > n2-03*, the drive will detect *oPE08 [Parameter Selection Error]*.
- When you change the value in *n2-02*, also change the value in *C4-02 [Torque Compensation Delay Time]* by the same ratio.

■ n2-03: Automatic Freq Regulator Time 2

No. (Hex.)	Name	Description	Default (Range)
n2-03 (0586) Expert	Automatic Freq Regulator Time 2	V/f OLV CLV CLV/PM Sets the time constant that sets the speed difference of the AFR function. Use this parameter for speed searches or regeneration. Usually it is not necessary to change this setting.	750 ms (0 - 2000 ms)

Adjust this parameter in these conditions:

- If the drive detects *ov [Overvoltage]* when acceleration stops under high-inertia loads, increase the setting value in 50 ms increments.
  If the drive detects *ov* when the load changes suddenly, increase the setting value in 50 ms increments.
- To increase the responsiveness of torque and speed, decrease the setting value in 10 ms increments and examine the response.

Note:

Set *n2-02 [Automatic Freq Regulator Time 1] ≤ n2-03*. If *n2-02 > n2-03*, the drive will detect *oPE08 [Parameter Selection Error]*.

◆ n5: Feed Forward Control

Feed forward control increases the responsiveness of acceleration and deceleration as specified by the speed reference.

Use feed forward control for applications where a high speed control proportional gain setting in *C5-01, C5-03, and C5-13 [ASR Proportional Gain]* would cause problems with overshoot, undershoot, or oscillation. When you use this function in CLV control, it also helps prevent overshoot. Refer to Figure 12.57. Refer to Figure 12.58 for more information about parameters related to feed forward control.

Set *A1-02 = 3 or 7 [Control Method Selection = CLV or CLV/PM]* to enable feed forward control.

Note:
- You cannot use feed forward control to increase responsiveness in applications where you apply loads externally during run at constant speed.
- When you use the Droop control function, set *n5-01 = 0 [Feed Forward Control Selection = Disabled]*.
- You cannot use feed forward control with motor 2.

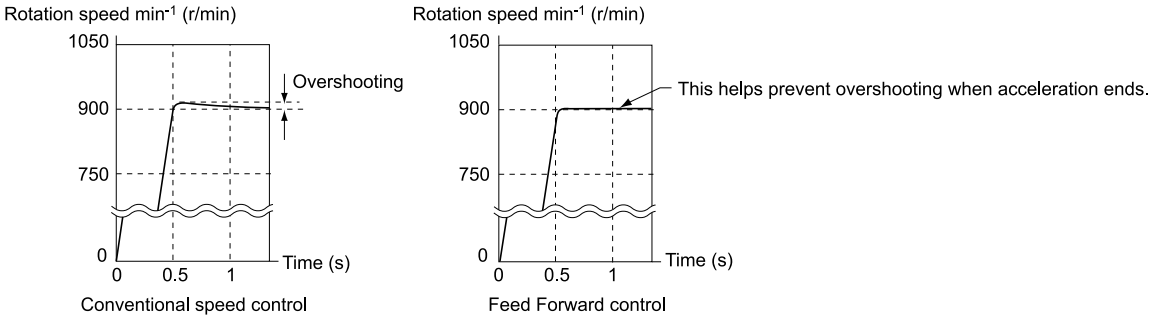

Figure 12.57 Suppress Overshooting with Feed Forward Control

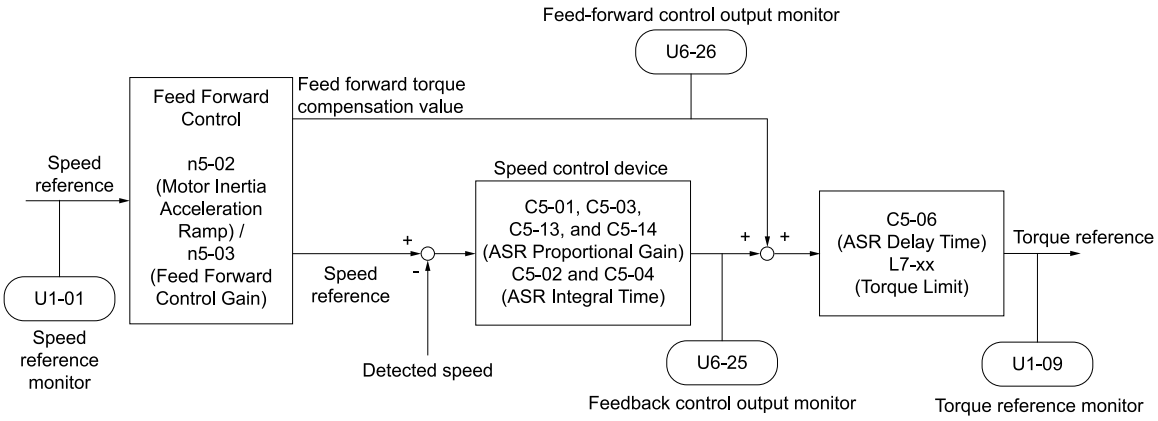

Figure 12.58 Configure Feed Forward Control

■ Before You Use Feed Forward Control

Do one of these procedures before you use feed forward control.

- Run Auto-Tuning to set motor parameters.
  When you cannot do Auto-Tuning, manually set motor parameters with the information on the motor nameplate or test reports. Set the *E2 parameters* for induction motors. Set the *E5 parameters* for PM motors.
- Set *C5 parameters [Automatic Speed Regulator (ASR)]* individually to adjust the speed control loop (ASR).
- Refer to Figure 12.58 and set the parameters related to feed forward control individually.

■ n5-01: Feed Forward Control Selection

No. (Hex.)	Name	Description	Default (Range)
n5-01 (05B0) Expert	Feed Forward Control Selection	V/f OLV CLV CLV/PM Sets the feed forward function.	0 (0, 1)

0 : Disabled

1 : Enabled

■ n5-02: Motor Inertia Acceleration Ramp

No. (Hex.)	Name	Description	Default (Range)
n5-02 (05B1) Expert	Motor Inertia Acceleration Ramp	V/f OLV CLV CLV/PM Sets the length of time for the motor to accelerate from the stopped to the maximum frequency with a single motor at the rated torque.	Determined by o2-04 (0.001 - 10.000 s)

Calculate the motor acceleration ramp as shown here or measure the motor acceleration ramp and set *n5-02* to this value.

Calculate the Motor Acceleration Ramp

Use this formula to find the motor acceleration ramp:

$$n5\text{-}02 = \frac{2\pi \cdot J_{Motor} \cdot n_{rated}}{60 \cdot T_{rated}}$$

- J_{Motor} = Moment of inertia of motor (kg m^2)
- n_{rated} = Motor rated speed (min^{-1}, r/min)
- T_{rated} = Motor rated torque (N·m)

You can also use this formula to find the motor acceleration ramp:

$$n5\text{-}02 = \frac{4\pi \cdot J_{Motor} \cdot f_{rated}}{p \cdot T_{rated}}$$

- f_{rated} = Motor rated frequency (Hz)
- P = Number of motor poles

Calculate the Motor Acceleration Ramp

Use this procedure to calculate the motor acceleration ramp:

1. Use *A1-02 [Control Method Selection]* to set the control method.
2. Disconnect the motor and load.
3. Run Auto-Tuning to set motor parameters.
   When you cannot do Auto-Tuning, use the information on the motor nameplate or test reports to manually set motor parameters. Set the *E2 parameters* for induction motors. Set the *E5 parameters* for PM motors.
4. Set *C5 parameters [Automatic Speed Regulator (ASR)]*.
5. Set *C1-01 [Acceleration Ramp 1] = 0*.
6. Set *L7-01 [Forward Torque Limit]* to 100%.
7. Set the speed reference to the same value as the motor rated speed.
8. Measure the length of time for the motor to reach the rated speed.
   Show *U1-05 [Speed Feedback]* on the keypad and enter the Up/Down command.
9. Stop the motor.
10. Set *n5-02* to the measured motor acceleration ramp value.

Reset all of the parameters that you changed to the previous setting values.

■ n5-03: Feed Forward Control Gain

No. (Hex.)	Name	Description	Default (Range)
n5-03 (05B2) Expert	Feed Forward Control Gain	V/f OLV CLV CLV/PM Sets the ratio between load inertia and motor inertia.	1.00 (0.00 - 100.00)

Use this procedure to set *n5-03*:

Set *n5-02 [Motor Inertia Acceleration Ramp]*.

1. Connect the motor and load.
2. Set *C1-01 [Acceleration Ramp 1] = 0*.
3. Use *L7-01 to L7-04 [Torque Limit]* to set the expected test run torque limit levels.
4. Set the speed reference as specified by the high speed range of the machine.
5. Measure the length of time for the motor to reach the command reference speed.

Show *U1-05 [Speed Feedback]* on the keypad and enter the Up/Down command.

6. Stop the motor.
7. Replace the values in this formula and set *n5-03* to the value of the formula.

$$n5\text{-}03 = \frac{t_{accel} \cdot T_{Lim_Test} \cdot f_{rated}}{n5\text{-}02 \cdot f_{ref_Test} \cdot 100} - 1$$

- t_{accel} = Acceleration ramp (s)
- f_{rated} = Motor rated frequency (Hz)
- T_{Lim_Test} = Test run torque limit (%)
- f_{ref_Test} = Test run speed reference (Hz)

⚠ WARNING Sudden Movement Hazard
Machinery can accelerate suddenly. Do not use this function with machinery that must not accelerate suddenly.
Sudden starts can cause serious injury or death.

Reset all of the parameters that you changed to the previous setting values.

Note:
- If response to the speed reference is slow, increase the value set in *n5-03*.
- Increase the value set in *n5-03* when response to the speed reference is slow.
  – The speed is overshooting.
  – A negative torque reference is output when acceleration ends.

◆ n6: Online Tuning

n6 parameters set the online tuning function for motor line-to-line resistance.

The Online Tuning for motor line-to-line resistance prevents degradation of speed control accuracy from motor temperature fluctuation and motor stalls from insufficient torque.

■ n6-01: Online Tuning Selection

No. (Hex.)	Name	Description	Default (Range)
n6-01 (0570) Expert	Online Tuning Selection	V/f **OLV** CLV CLV/PM Sets the type of motor data that Online Tuning uses for OLV control.	2 (0 - 2)

0 : Disabled

1 : Line-to-Line Resistance Tuning

The drive adjusts the motor line-to-line resistance during run. This procedure is applicable for speed values 6 Hz and less. It also adjusts the motor resistance value to increase the overload capacity in the low speed range.

2 : Voltage Correction Tuning

The drive adjusts the output voltage during run to increase overload tolerance and minimize the effects of high temperatures on speed precision.

Note:
Setting 2 is enabled only when *b8-01 = 0 [Energy Saving Control Selection = Disabled]*.

■ n6-05: Online Tuning Gain

No. (Hex.)	Name	Description	Default (Range)
n6-05 (05C7) Expert	Online Tuning Gain	V/f **OLV** CLV CLV/PM Sets the compensation gain when *n6-01 = 2 [Online Tuning Selection = Voltage Correction Tuning]*. Usually it is not necessary to change this setting.	1.0 (0.1 - 50.0)

When you use a motor that has a large secondary circuit time constant, decrease the setting value.

If the drive detects *oL1 [Motor Overload]*, increase the setting value in 0.1-unit increments.

◆ n8: PM Motor Control Tuning

n8 parameters make adjustments when controlling PM motors.

■ Initial Rotor Pole Position Search Settings

When you use a PM motor with a non-absolute encoder such as an incremental encoder with a PG-X3 option, the drive needs to search for the rotor pole position before it can operate the motor. The drive always does this search when:

- An Up/Down command is issued for the first time after you energized the drive.
- One of these faults occurred:
  - *dv1 [Z Pulse Fault]*
  - *dv2 [Z Pulse Noise Fault Detection]*
  - *dv3 [Inversion Detection]*
  - *dv4 [Inversion Prevention Detection]*
  - *dv6 [Over Jerk]*
  - *dv7 [Polarity Judge Timeout]*
  - *PGo [Encoder (PG) Feedback Loss]*
  - *PGoH [Encoder (PG) Hardware Fault]*
- An Up/Down command is issued after you changed *n8-35*.

With default settings, if initial rotor pole position search fails when *n8-86 = 1 [Pole Search Error Detection Sel = Enabled]*, the drive will detect a *dv8 [PM Rotor Position DetectionError]* fault. In this case, the MFDO terminal set for *H2-xx = 50 [Brake Control]* will not open.

When you do not use the brake sequence of the drive, include the MFDO signal set for *H2-xx = 61 [Pole Position Detection Complete]* to open the brake only if motor pole position search has finished successfully.

■ n8-01: Pole Position Detection Current

No. (Hex.)	Name	Description	Default (Range)
n8-01 (0540) Expert	Pole Position Detection Current	V/f OLV CLV **CLV/PM** Sets the Initial Rotor Position Estimated Current as a percentage where *E5-03 [PM Motor Rated Current (FLA)]* = 100%. Usually it is not necessary to change this setting.	50% (0 - 100%)

The drive uses the Initial Rotor Position Estimated Current to detect the initial position of rotors.

Use the “Si” value on the motor nameplate, if available.

■ n8-02: Pole Alignment Current Level

No. (Hex.)	Name	Description	Default (Range)
n8-02 (0541) Expert	Pole Alignment Current Level	V/f OLV CLV **CLV/PM** Sets the current at the time of polar attraction as a percentage where *E5-03 [PM Motor Rated Current (FLA)]* = 100%. Usually it is not necessary to change this setting.	80% (0 - 150%)

The drive uses the polar pull-in current to attract the rotor after it detects the initial rotor position. When you increase the value of *n8-02*, the starting torque also increases.

- If the motor does not track correctly at the time of the polar attraction, increase the value in 10% increments. If you set the value too high, the drive will detect *oL2 [Drive Overload]*.
- If the motor oscillates at the time of the polar attraction, decrease the value in 10% increments.

Note:

When *A1-02 = 7 [Control Method Selection = CLV/PM]*, do Rotational Auto-Tuning or Encoder Tuning to enable this function.

■ n8-09: IniHarm Jdg Time

No. (Hex.)	Name	Description	Default (Range)
n8-09 (0548) Expert	IniHarm Jdg Time	V/f OLV CLV **CLV/PM** Sets the judgment time for initial magnetic pole estimation. Usually it is not necessary to change this setting. When it is necessary to shorten the time, it is possible to shorten it in the range to avoid errors.	1000 ms (100 - 2000 ms)

Note:

This parameter is available only for High Frequency Injection.

■ n8-35: Initial Pole Detection Method

No. (Hex.)	Name	Description	Default (Range)
n8-35 (0562) Expert	Initial Pole Detection Method	V/f OLV CLV CLV/PM Sets how the drive detects the position of the rotor at start.	1 (0, 1)

When you set *A1-02 = 7 [Control Method Selection = CLV/PM]*, the initial motor magnetic pole detection operates the first time after you energize the drive. After the first time, the drive uses the encoder signal to calculate the rotor position and the drive saves the value until you de-energize the drive. If you use an absolute value encoder, the initial motor magnetic pole detection will not operate.

1 : High Frequency Injection

Injects high frequency to detect the rotor position. This setting can cause a loud excitation sound when the motor starts.

2 : Pulse Injection

Inputs the pulse signal to the motor to detect the rotor position.

■ n8-36: HFI Frequency Level for L Tuning

No. (Hex.)	Name	Description	Default (Range)
n8-36 (0563) Expert	HFI Frequency Level for L Tuning	V/f OLV CLV CLV/PM Sets the injection frequency for high frequency injection.	500 Hz (25 - 1000 Hz)

Note:

Set *n8-35 = 1 [Initial Pole Detection Method = High Frequency Injection]* to enable this parameter.

■ n8-37: HFI Voltage Amplitude Level

No. (Hex.)	Name	Description	Default (Range)
n8-37 (0564) Expert	HFI Voltage Amplitude Level	V/f OLV CLV CLV/PM Sets the high frequency injection amplitude as a percentage where 200 V = 100% for 200 V class drives and 400 V = 100% for a 400 V class drives. Usually it is not necessary to change this setting.	20.0% (0.0 - 99.9%)

Note:

Set *n8-35 = 1 [Initial Pole Detection Method = High Frequency Injection]* to enable this parameter.

■ n8-41: HFI P Gain

No. (Hex.)	Name	Description	Default (Range)
n8-41 (0568) Expert	HFI P Gain	V/f OLV CLV CLV/PM Sets the response gain for the high frequency injection speed estimation.	2.5 (-10.0 - +10.0)

Note:

- Set *n8-35 = 1 [Initial Pole Detection Method = High Frequency Injection]* to enable this parameter.
- Set *n8-41 > 0.0* for IPM motors.

Set this parameter as follows:

- If there is oscillation or hunting, decrease the setting value in 0.5-unit increments.
- When it is necessary to track load changes, increase the setting value in 0.5-unit increments.

■ n8-42: HFI I Time

No. (Hex.)	Name	Description	Default (Range)
n8-42 (0569) Expert	HFI I Time	V/f OLV CLV CLV/PM Sets the integral time constant for the high frequency injection speed estimation. Usually it is not necessary to change this setting.	0.00 s (0.00 - 9.99 s)

Note:

Set *n8-35 = 1 [Initial Pole Detection Method = High Frequency Injection]* to enable this parameter.

■ n8-62: Output Voltage Limit Level

No. (Hex.)	Name	Description	Default (Range)
n8-62 (057D) Expert	Output Voltage Limit Level	V/f OLV CLV CLV/PM Sets the output voltage limit to prevent saturation of the output voltage. Usually it is not necessary to change this setting.	200 V Class: 200.0 V, 400 V Class: 400.0 V (200 V Class: 0.0 - 240.0 V, 400 V Class: 0.0 - 480.0 V)

Set this parameter lower than the input power supply voltage.

■ n8-81: High Freq Injection @ Rescue

No. (Hex.)	Name	Description	Default (Range)
n8-81 (02D0) Expert	High Freq Injection @ Rescue	V/f OLV CLV CLV/PM Sets the frequency used for High Frequency Injection during Rescue Operation.	130 Hz (25 - 1000 Hz)

■ n8-82: HighFreq Inject Amplitude@Rescue

No. (Hex.)	Name	Description	Default (Range)
n8-82 (02D1) Expert	HighFreq Inject Amplitude@Rescue	V/f OLV CLV CLV/PM Sets the amplitude for High Frequency Injection during Rescue Operation as a percentage of the voltage class.	15.0% (0.1 - 99.9%)

■ n8-84: Polarity Detection Current

No. (Hex.)	Name	Description	Default (Range)
n8-84 (02D3) Expert	Polarity Detection Current	V/f OLV CLV CLV/PM Sets the current that the drive uses to estimate the initial motor magnetic pole as a percentage where *E5-03 [PM Motor Rated Current (FLA)] = 100%*.	Determined by C6-23 (0 - 150%)

⚠ WARNING Sudden Movement Hazard

Make sure that the polarity is correct before you send an Up/Down command. If the drive incorrectly detects the polarity, the drive can rotate in the direction opposite of the Up/Down command and cause serious injury or death.

Note:

The default setting changes when *C6-23 [Carrier Frequency @ Pole Search]* changes:
- *C6-23 = 0 [2 kHz]*: 100%
- *C6-23 = 1 [Use the value set to C6-03]*: 120%

When you use a Yaskawa motor, check the motor nameplate for an "Si" value and set this parameter ≥ "Si × 2". Consult the motor manufacturer for information about maximum setting values.

Find the Polarity of Magnetic Poles

When you start operation, the drive estimates the magnetic poles and finds the polarity of the magnetic poles. When *A1-02 = 7 [Control Method Selection = CLV/PM]*, the drive finds the polarity of the magnetic poles only at the first startup.

Use *U6-57 [PolePolarityDeterVal]* to make sure that the drive correctly estimated the polarity of the magnetic poles.

Note:

If the drive detects *dv3 [Inversion Detection]* or *dv4 [Inversion Prevention Detection]*, increase the setting value.

■ n8-86: Pole Search Error Detection Sel

No. (Hex.)	Name	Description	Default (Range)
n8-86 (02D5) Expert	Pole Search Error Detection Sel	V/f OLV CLV CLV/PM Sets the function to enable and disable the Initial Pole Search error detection.	0 (0, 1)

0 : Disabled

The rotor pole position search is done one time. The drive uses the detected rotor position to start.

If the detected position is wrong, an error occurs when the drive tries to run the motor.

The initial pole search takes approximately 1.5 s.

1 : Enabled

The rotor pole position search is done multiple times. The drive uses the detected rotor position to start only when there is no difference between the search results.

If the detected position is wrong, the drive detects a *dv8 [PM Rotor Position DetectionError]* fault.

The initial pole search takes approximately 1.5 s to 5.0 s.

◆ nA: PM Motor Control Tuning

nA parameters make adjustments for controlling PM motors.

■ nA-04: Vout Limit Iq Change Width

No. (Hex.)	Name	Description	Default (Range)
nA-04 (1BF5) Expert	Vout Limit Iq Change Width	V/f OLV CLV CLV/PM Sets the changing width of the q-axis current reference based on the d-axis current reference as a percentage of the motor rated current. Usually it is not necessary to change this setting.	-10% (-20 - 0%)

Note:

If *b8-01 = 0 [Energy Saving Control Selection = Disabled]* and there is shock when the output voltage is limited, change this parameter to decrease the shock.

■ nA-05: HFI P Gain @ Rescue

No. (Hex.)	Name	Description	Default (Range)
nA-05 (312E) Expert	HFI P Gain @ Rescue	V/f OLV CLV CLV/PM Sets the response gain for the high frequency injection speed estimation at Rescue Operation. Usually it is not necessary to change this setting.	2.5 (-10.0 - +10.0)

Note:

Set *n8-35 = 1 [Initial Pole Detection Method = High Frequency Injection]* to enable this parameter.

If the Initial Pole Detection fails at Rescue Operation, set this parameter as follows:

- If there is oscillation or hunting, decrease the setting value in 0.5-unit increments.
- When it is necessary to track load changes, increase the setting value in 0.5-unit increments.

■ nA-06: HFI I Time @ Rescue

No. (Hex.)	Name	Description	Default (Range)
nA-06 (312F) Expert	HFI I Time @ Rescue	V/f OLV CLV CLV/PM Sets the integral time constant for the high frequency injection speed estimation at Rescue Operation. Usually it is not necessary to change this setting.	0.00 (0.00 - 9.99)

Note:

Set *n8-35 = 1 [Initial Pole Detection Method = High Frequency Injection]* to enable this parameter.

12.11 o: Keypad-Related Settings

o parameters set keypad functions.

Note:
You cannot set these parameters with the optional LED keypad.

Table 12.31 Parameters You Cannot Set with an LED Keypad

No.	Name
o1-05	LCD Contrast Adjustment
o1-24 to o1-35	Custom Monitor 1 to 12
o1-36	LCD Backlight Brightness
o1-37	LCD Backlight ON/OFF Selection
o1-38	LCD Backlight Off-Delay
o1-39	Show Initial Setup Screen
o3-04	Select Backup/Restore Location
o3-06	Auto Parameter Backup Selection

No.	Name
o3-07	Auto Parameter Backup Interval
o4-22	Time Format
o4-23	Date Format
o4-24	bAT Detection Selection
o5-01	Log Start/Stop Selection
o5-02	Log Sampling Interval
o5-03 to o5-12	Log Monitor Data 1 to 10

◆ o1: Keypad Display

o1 parameters select the parameters shown on the initial keypad screen and to configure the parameter setting units and display units. These parameters also adjust the backlight and contrast of the LCD display.

■ o1-01: User Monitor Selection

No. (Hex.)	Name	Description	Default (Range)
o1-01 (0500) RUN Expert	User Monitor Selection	V/f OLV CLV CLV/PM Sets the *U monitor* for the Drive Mode. This parameter is only available when you use an LED keypad.	106 (104 - 999)

When the drive is in Drive Mode, push ⌃ on the keypad to cycle through this data: speed reference → rotational direction → output speed → output current → *o1-01* selection.

Set the *x-xx* part of *Ux-xx* that is shown in the fifth position in Drive Mode. For example, to show *U1-05 [Speed Feedback]*, set *o1-01 = 105*.

Note:
The monitors that you can select are different for different control methods.

■ o1-02: Monitor Selection at Power-up

No. (Hex.)	Name	Description	Default (Range)
o1-02 (0501) RUN Expert	Monitor Selection at Power-up	V/f OLV CLV CLV/PM Sets the monitor item that the keypad screen shows after you energize the drive. Refer to "U: Monitors" for information about the monitor items that the keypad screen can show. This parameter is only available when you use an LED keypad.	1 (1 - 5)

1 : Speed Reference (U1-01)
2 : Direction
3 : Output Speed (U1-02)
4 : Output Current (U1-03)
5 : User Monitor (o1-01)
Shows the monitor item selected in *o1-01 [User Monitor Selection]*.

■ o1-03: Speed Display Unit Selection

No. (Hex.)	Name	Description	Default (Range)
o1-03 (0502)	Speed Display Unit Selection	V/f OLV CLV CLV/PM Sets the display units for the speed reference and output speed.	1 (0 - 6)

Note:
- The units of these parameters change when this parameter changes:
  - *d1-01 to d1-08 [Reference 1 to 8]*
  - *U1-01 [Speed Reference]*
  - *U1-02 [Output Speed]*
  - *U1-05 [Speed Feedback]*
  - *U1-16 [SFS Output Speed]*
  - *U4-14 [PeakHold Output Spd]*
  - *U6-27 [FeedFwd Estimate Spd]*
- For monitor 2, the setting value is always *0 [0.01 Hz]*.

0 : 0.01 Hz

1 : 0.01% (100% = E1-04)

E1-04 [Maximum Output Frequency] is 100%.

2 : Revolutions Per Minute (RPM)

The drive uses the maximum output speed and number of motor poles to calculate this value automatically.

Note:

When you set *o1-03 = 2*, make sure that you set the number of motor poles in these parameters:
- *E2-04 [Motor Pole Count]*
- *E4-04 [Motor 2 Motor Poles]*
- *E5-04 [PM Motor Pole Count]*

3 : User Units (o1-10 & o1-11)

The drive uses *o1-10 [User Units Maximum Value]* and *o1-11 [User Units Decimal Position]* to set the unit of measure. The value of parameter *o1-10* is the value when you remove the decimal point from the maximum output speed. Parameter *o1-11* is to the number of digits after the decimal point in the maximum output speed.

To display a maximum output speed of 100.00, set parameters to these values:

- *o1-10 = 10000*
- *o1-11 = 2 [Two Decimal Places (XXX.XX)]*

4 : Elevator Unit1 - m/s, s, s

The drive shows speed in m/s, and acceleration/deceleration rate and jerk in s.

5 : Elevator Unit2 - m/(s, s^2, s^3)

The drive shows speed in m/s, acceleration/deceleration rate in m/s^2, and jerk in m/s^3.

6 : Elevator Unit3-ft/(min,s^2,s^3)

The drive shows speed in ft/min, acceleration/deceleration rate in ft/s^2, and jerk in ft/s^3.

Refer to *Keypad Display Unit Selection on page 134* and *Defaults and Setting Ranges Changed by o1-03 [Speed Display Unit Selection] on page 513* for more information.

■ o1-04: V/f Pattern Display Unit

No. (Hex.)	Name	Description	Default (Range)
o1-04 (0503) Expert	V/f Pattern Display Unit	V/f OLV CLV CLV/PM Sets the setting units for parameters that set the V/f pattern frequency.	Determined by A1-02 (0, 1)

Note:
- Select the setting unit of these parameters:
  – *E1-04 [Maximum Output Frequency]*
  – *E1-06 [Base Frequency]*
  – *E1-07 [Mid Point A Frequency]*
  – *E1-09 [Minimum Output Frequency]*
  – *E1-11 [Mid Point B Frequency]*
- For monitor 2, the setting value is always *0 [Hz Unit]*.

0 : Hz

1 : Revolutions Per Minute (RPM)

When you set *o1-04 = 1*, make sure that you set the number of motor poles in these parameters:

- *E2-04 [Motor Pole Count]*
- *E5-04 [PM Motor Pole Count]*

■ o1-05: LCD Contrast Adjustment

No. (Hex.)	Name	Description	Default (Range)
o1-05 (0504) RUN Expert	LCD Contrast Adjustment	V/f OLV CLV CLV/PM Sets the contrast of the LCD display on the keypad.	5 (0 - 10)

When you decrease the setting value, the contrast of the LCD display decreases. When you increase the setting value, the contrast increases.

■ o1-10: User Units Maximum Value

No. (Hex.)	Name	Description	Default (Range)
o1-10 (0520) Expert	User Units Maximum Value	V/f OLV CLV CLV/PM Sets the value that the drive shows as the maximum output speed.	6000 (1 - 60000)

To display a maximum output speed of 100.00, set parameters to these values:

- *o1-10 = 10000*
- *o1-11 = 2 [User Units Decimal Position = Two Decimal Places (XXX.XX)]*

Note:
Set *o1-03 = 3 [Speed Display Unit Selection = User Units (o1-10 & o1-11)]* before you set *o1-10* and *o1-11*.

■ o1-11: User Units Decimal Position

No. (Hex.)	Name	Description	Default (Range)
o1-11 (0521) Expert	User Units Decimal Position	V/f OLV CLV CLV/PM Sets the number of decimal places for speed reference and monitor values.	2 (0 - 3)

0 : No Decimal Places (XXXXX)

1 : One Decimal Places (XXXX.X)

2 : Two Decimal Places (XXX.XX)

3 : Three Decimal Places (XX.XXX)

Note:
Set *o1-03 = 3 [Speed Display Unit Selection = User Units (o1-10 & o1-11)]* before you set *o1-10 [User Units Maximum Value]* and *o1-11*.

■ o1-12: Length Units

No. (Hex.)	Name	Description	Default (Range)
o1-12 (0739)	Length Units	V/f OLV CLV CLV/PM Sets the units used for distance control and for the sheave diameter.	0 (0, 1)

0 : Millimeter Units

1 : Inch Units

Note:

This parameter changes the units of these parameters:

- *o1-20 [Sheave Diameter]*
- *S5-11 [Deceleration Distance@High Speed]*
- *S5-12 [Up Stopping Distance]*
- *U4-42 [Remaining Distance]*
- *U4-43 [Min.Dec.Distance (H)]*
- *U4-44 [Min.Stop Distance]*

■ o1-18: Speed of Elevator Car

No. (Hex.)	Name	Description	Default (Range)
o1-18 (1205)	Speed of Elevator Car	V/f OLV CLV CLV/PM Sets the car speed at which the elevator will travel. Usually it is Nominal Speed.	0.00 m/s (0.00 - 10.00 m/s)

■ o1-19: Elevator Motor Speed

No. (Hex.)	Name	Description	Default (Range)
o1-19 (1206)	Elevator Motor Speed	V/f OLV CLV CLV/PM Sets the motor speed that corresponds to the value set in *o1-18 [Speed of Elevator Car]*.	0.00 rpm (0.00 - 6000.0 rpm)

Note:

This parameter does not refer to a physically-driven speed. It is used to scale the speed displays or *d1-xx* upper limits in lift units.

■ o1-20: Sheave Diameter

No. (Hex.)	Name	Description	Default (Range)
o1-20 (0575)	Sheave Diameter	V/f OLV CLV CLV/PM Sets the traction sheave diameter for display unit calculations.	400 mm (80 - 2000 mm)

⚠ WARNING Sudden Movement Hazard

Make sure that all units and values set for *o1-20 [Sheave Diameter]*, *S5-11 [Deceleration Distance@High Speed]*, and *S5-12 [Up Stopping Distance]* are correct before you use Stop Distance Control.
Incorrect settings can cause serious injury or death from elevator car overrun.

Note:

When *o1-12 = 1 [Length Units = Inch Units]*, the default setting is 15.70 in, and the setting range is 3.00 in to 78.00 in.

■ o1-21: Roping Ratio

No. (Hex.)	Name	Description	Default (Range)
o1-21 (0576)	Roping Ratio	V/f OLV CLV CLV/PM Sets the roping ratio.	2 (1 - 4)

1 : 1:1

2 : 2:1

3 : 3:1

4 : 4:1

■ o1-22: Mechanical Gear Ratio

No. (Hex.)	Name	Description	Default (Range)
o1-22 (0577)	Mechanical Gear Ratio	V/f OLV CLV CLV/PM Sets the ratio of the gear installed for display unit calculations.	Determined by A1-02 (0.10 - 100.00)

■ o1-23: Safe Torque Off Display Select

No. (Hex.)	Name	Description	Default (Range)
o1-23 (0174) Expert	Safe Torque Off Display Select	V/f OLV CLV CLV/PM Sets the function to hide *STo [Safe Torque OFF]* on the keypad during safety input.	0 (0, 1)

0 : Disabled

The keypad shows *STo*.

1 : Enabled

The keypad does not show *STo*.

■ o1-24 to o1-35: Custom Monitor 1 to 12

No. (Hex.)	Name	Description	Default (Range)
o1-24 to o1-35 (11AD - 11B8) RUN	Custom Monitor 1 to 12	V/f OLV CLV CLV/PM Sets a maximum of 12 monitors as user monitors. This parameter is only available when you use an LCD keypad.	Determined by A1-02 (0, 101 - 999)

These parameters save the monitor items selected by the LCD keypad [Custom Monitor].

Note:

- You can show a maximum of three selected monitors on one LCD keypad screen.
  - –When you select only one monitor, the text size of this monitor increases. For example, when *o1-25 to o1-35 = 0*, the text size of the monitor saved in *o1-24* increases.
  - –When you select two monitors, the text size of these monitors increase.
  - –When you select four or more monitors, the keypad shows the fourth monitor and all additional monitors on the next screens.
- You can set all monitors to parameters *o1-24* to *o1-35*.
- The default settings change when *A1-02 [Control Method Selection]* changes:

Parameter No.	Monitors	
	A1-02 = 0 [V/f]	A1-02 = 2, 3, 7 [OLV, CLV, CLV/PM]
o1-24	U1-01 [Speed Reference]	U1-01 [Speed Reference]
o1-25	U1-02 [Output Speed]	U1-05 [Speed Feedback]
o1-26	U1-03 [Output Current]	U1-03 [Output Current]
o1-27	U1-16 [SFS Output Speed]	U1-02 [Output Speed]
o1-28	U1-12 [Drive Status]	U1-12 [Drive Status]
o1-29	U1-06 [Output Voltage Ref]	U1-06 [Output Voltage Ref]
o1-30	U1-07 [DC Bus Voltage]	U1-07 [DC Bus Voltage]
o1-31	U1-08 [Output Power]	U1-09 [Torque Reference]
o1-32	U4-13 [Peak Hold Current]	U4-13 [Peak Hold Current]
o1-33	U1-40 [Input Term Status 1]	U1-40 [Input Term Status 1]
o1-34	U1-41 [Input Term Status 2]	U1-41 [Input Term Status 2]
o1-35	U1-11 [Output Terminal Status]	U1-11 [Output Terminal Status]

■ o1-36: LCD Backlight Brightness

No. (Hex.)	Name	Description	Default (Range)
o1-36 (11B9) RUN	LCD Backlight Brightness	V/f OLV CLV CLV/PM Sets the intensity of the LCD keypad backlight.	3 (1 - 5)

When you decrease the setting value, the intensity of the backlight decreases.

■ o1-37: LCD Backlight ON/OFF Selection

No. (Hex.)	Name	Description	Default (Range)
o1-37 (11BA) RUN	LCD Backlight ON/OFF Selection	V/f OLV CLV CLV/PM Sets the automatic shut off function for the LCD backlight.	1 (0, 1)

Note:

Use *o1-36 [LCD Backlight Brightness]* to adjust the intensity of the LCD backlight.

0 : OFF

The backlight will automatically turn off after the time set in *o1-38 [LCD Backlight Off-Delay]* is expired.

When the backlight is off, push a key on the keypad to temporarily turn the backlight on. After the backlight turns on, it will turn off automatically after the time set in *o1-38* is expired.

Note:

When you start keypad operation, push the key again after the backlight turns on. For example, push RUN to turn the backlight on, then push RUN again to enter an Up/Down command to the drive.

1 : ON

The backlight will always be ON.

■ o1-38: LCD Backlight Off-Delay

No. (Hex.)	Name	Description	Default (Range)
o1-38 (11BB) RUN Expert	LCD Backlight Off-Delay	V/f OLV CLV CLV/PM Sets the time until the LCD backlight automatically turns off.	300 s (10 - 600 s)

When *o1-37 = 0 [LCD Backlight ON/OFF Selection= OFF]*, the backlight will automatically turn off after the time set in *o1-38* expires.

When the backlight is off, push a key on the keypad to temporarily turn the backlight on. After the backlight turns on, it will turn off automatically after the time set in *o1-38* is expired.

■ o1-39: Show Initial Setup Screen

No. (Hex.)	Name	Description	Default (Range)
o1-39 (11BC) RUN Expert	Show Initial Setup Screen	V/f OLV CLV CLV/PM Sets the function to show the LCD keypad initial setup screen each time you energize the drive. This parameter is only available when you use an LCD keypad.	1 (0, 1)

The initial setup screen shows a menu where you can select the display language, set the date, time, and other basic settings. When you set this parameter to 0, the drive will not show this screen each time you energize the drive.

0 : No

The drive will not show the initial setup display screen each time you energize the drive. The drive will show the Home screen.

1 : Yes

When you input the Up/Down command before you energize the drive or when you turn on the Up/Down command while the drive shows the initial setup screen, the drive will replace the initial setup screen with the Home screen.

■ o1-58: Motor Power Unit Selection

No. (Hex.)	Name	Description	Default (Range)
o1-58 (3125)	Motor Power Unit Selection	V/f OLV CLV CLV/PM Sets the setting units for parameters that set the motor rated power.	0 (0, 1)

The drive shows these parameter values in the set units:

- *E2-11 [Motor Rated Power]*
- *E5-02 [PM Motor Rated Power]*
- *T1-02 [Motor Rated Power]*
- *T2-04 [PM Motor Rated Power]*

0 : kW

Shows the motor output in kW units.

1 : HP

Shows the motor output in HP units.

◆ o2: Keypad Operation

■ o2-01: LO/RE Key Function Selection

No. (Hex.)	Name	Description	Default (Range)
o2-01 (0505) Expert	LO/RE Key Function Selection	V/f OLV CLV CLV/PM Sets the function that lets you use LO/RE to switch between LOCAL and REMOTE Modes.	0 (0, 1)

0 : Disabled

You cannot use LO/RE to switch between LOCAL and REMOTE Modes.

1 : Enabled

You can use LO/RE to switch between LOCAL and REMOTE Modes when the drive is stopped. When LOCAL Mode is selected, LO/RE on the keypad will come on.

■ o2-02: STOP Key Function Selection

No. (Hex.)	Name	Description	Default (Range)
o2-02 (0506) Expert	STOP Key Function Selection	V/f OLV CLV CLV/PM Sets the function to use STOP on the keypad to stop the drive when the Up/Down command source for the drive is REMOTE (external) and not assigned to the keypad.	0 (0, 1)

0 : Disabled

1 : Enabled

STOP stays enabled when there is no Up/Down command source assigned to the keypad.

To start the drive again after you push STOP to stop operation, turn the external Up/Down command OFF and ON again.

■ o2-03: User Parameter Default Value

No. (Hex.)	Name	Description	Default (Range)
o2-03 (0507) Expert	User Parameter Default Value	V/f OLV CLV CLV/PM Sets the function to keep the settings of changed parameters as user parameter defaults to use during initialization.	0 (0 - 2)

When you set *o2-03 = 1 [Set defaults]*, the drive saves changed parameter settings as user parameter setting values in a part of the memory that is isolated from drive parameters.

When you set *A1-03 = 1110 [Initialize Parameters = User Initialization]* to initialize the drive, the drive resets the internal parameter setting values to those user parameter setting values.

0 : No change

1 : Set defaults

Saves changed parameter setting values as user default settings.

Set *o2-03 = 1* then push ↵ to save the user parameter setting values. After the drive saves the setting value, *o2-03* automatically resets to *0*.

2 : Clear all

Deletes all of the saved user parameter setting values.

Set *o2-03 = 2* then push ⏎ to clear the user parameter setting values. The drive will automatically reset *o2-03* to 0. If you delete the user parameter setting values, you cannot set *A1-03 = 1110* to initialize parameters.

■ o2-04: Drive Model (KVA) Selection

No. (Hex.)	Name	Description	Default (Range)
o2-04 (0508) Expert	Drive Model (KVA) Selection	V/f OLV CLV CLV/PM Sets the Drive Model code. Set this parameter after replacing the control board.	0 Determined by the drive (-)

NOTICE

Set *o2-04 [Drive Model (KVA) Selection]* correctly.
If you set this parameter incorrectly, it will decrease drive performance, cause the protection function to operate incorrectly, and cause damage to the drive.

Note:
When the setting value of *o2-04* changes, related parameter setting values also change. Refer to *Defaults by Drive Model on page 507* for more information.

These tables list the relation between *o2-04* setting values and drive models.

Table 12.32 Three-Phase 200 V Class

Drive Model	o2-04 Setting	Drive Model	o2-04 Setting
2022	68	2144	72
2031	6A	2181	73
2041	6B	2225	74
2059	6D	2269	75
2075	6E	2354	76
2094	6F	2432	77
2110	70	2519	78

Table 12.33 Three-Phase 400 V Class

Drive Model	o2-04 Setting	Drive Model	o2-04 Setting
4012	97	4094	A2
4019	99	4114	A3
4023	9A	4140	A4
4030	9C	4188	A5
4039	9D	4225	A6
4049	9E	4270	A7
4056	9F	4325	A8
4075	A1	4380	A9

■ o2-06: Keypad Disconnect Detection

No. (Hex.)	Name	Description	Default (Range)
o2-06 (050A) Expert	Keypad Disconnect Detection	V/f OLV CLV CLV/PM Sets the function that stops the drive if you disconnect the keypad connection cable from the drive or if you damage the cable while the keypad is the Up/Down command source.	0 (0, 1)

This parameter continues to operate if the keypad installed to the drive becomes disconnected.

This parameter is enabled in these conditions:

- When *b1-02 = 0 [Up/Down Command Selection 1 = Keypad]*
- In LOCAL Mode

0 : Disabled

The drive continues operation when it detects a keypad disconnection.

1 : Enabled

When the drive detects a keypad disconnection, the drive detects *oPr [Keypad Connection Fault]*, and stops operation. The motor coasts to stop.

■ o2-09: Reserved

No. (Hex.)	Name	Description	Default (Range)
o2-09 (050D) Expert	Reserved	-	-

■ o2-23: External 24V Powerloss Detection

No. (Hex.)	Name	Description	Default (Range)
o2-23 (11F8) RUN Expert	External 24V Powerloss Detection	V/f OLV CLV CLV/PM Sets the function to give a warning if the backup external 24 V power supply turns off when the main circuit power supply is in operation.	0 (0, 1)

Note:

The drive will not run when it is operating from one 24-V external power supply.

0 : Disabled

The drive does not detect the loss of the 24-V external power supply.

1 : Enabled

The keypad shows the *L24v [Loss of External Power 24 Supply]* indicator if the drive detects the loss of the 24-V external power supply.

Note:

A minor fault signal is not output from *H2-xx = 10 [MFDO Function Selection = Alarm]*.

■ o2-26: Alarm Display at Ext. 24V Power

No. (Hex.)	Name	Description	Default (Range)
o2-26 (1563) Expert	Alarm Display at Ext. 24V Power	V/f OLV CLV CLV/PM When you connect a backup external 24 V power supply, this parameter sets the function to trigger an alarm when the main circuit power supply voltage decreases.	0 (0, 1)

0 : Disabled

The drive will not detect *EP24v [External Power 24V Supply]* if the main circuit power supply voltage decreases. The [Ready] light on the LED Status Ring flashes quickly to identify that drive operation is not possible.

1 : Enabled

The drive detects *EP24v* when the main circuit power supply voltage decreases.

Note:

A minor fault signal is not output from *H2-xx = 10 [MFDO Function Selection = Alarm]*.

◆ o3: Copy Keypad Function

o3 parameters set the operation of the parameter backup function.

■ o3-01: Copy Keypad Function Selection

No. (Hex.)	Name	Description	Default (Range)
o3-01 (0515)	Copy Keypad Function Selection	V/f OLV CLV CLV/PM Sets the function that saves and copies drive parameters to a different drive with the keypad.	0 (0 - 3)

0 : Copy Select

1 : Backup (drive → keypad)

The parameter setting values are read from the drive and saved in the keypad.

2 : Restore (keypad → drive)

Copies the parameter setting values saved in the keypad to a different drive.

3 : Verify (check for mismatch)

Makes sure that the parameter setting values in the drive agree with the parameters saved in the keypad.

■ o3-02: Copy Allowed Selection

No. (Hex.)	Name	Description	Default (Range)
o3-02 (0516)	Copy Allowed Selection	V/f OLV CLV CLV/PM Sets the copy function when *o3-01 = 1 [Copy Keypad Function Selection = Backup (drive → keypad)]*.	0 (0, 1)

Note:

When you select [Parameter Backup] on the keypad menu screen to do the backup function, the drive automatically sets *o3-02 = 1*.

0 : Disabled

1 : Enabled

■ o3-04: Select Backup/Restore Location

No. (Hex.)	Name	Description	Default (Range)
o3-04 (0B3E)	Select Backup/Restore Location	V/f OLV CLV CLV/PM Sets the storage location for drive parameters when you back up and restore parameters. This parameter is only available when you use an LCD keypad.	0 (0 - 3)

You can use the LCD keypad to make a maximum of 4 parameter backup sets.

0 : Memory Location 1

1 : Memory Location 2

2 : Memory Location 3

3 : Memory Location 4

■ o3-06: Auto Parameter Backup Selection

No. (Hex.)	Name	Description	Default (Range)
o3-06 (0BDE) Expert	Auto Parameter Backup Selection	V/f OLV CLV CLV/PM Sets the function that automatically backs up parameters. This parameter is only available when you use an LCD keypad.	1 (0, 1)

When you connect the drive and keypad, parameters set to the drive are automatically backed up to the keypad as specified by the setting of parameters *o3-06* and *o3-07*.

0 : Disabled

1 : Enabled

Note:

When you replace the LCD keypad then energize the drive, the keypad shows the restore operation screen automatically to restore the drive configuration with the parameters backed up to the LCD keypad. If you connect an LCD keypad that does not have parameter backup data, the keypad will not show the restore operation screen.

■ o3-07: Auto Parameter Backup Interval

No. (Hex.)	Name	Description	Default (Range)
o3-07 (0BDF) Expert	Auto Parameter Backup Interval	V/f OLV CLV CLV/PM Sets the interval at which the automatic parameter backup function saves parameters from the drive to the keypad.	1 (0 - 3)

The drive saves parameter settings to the keypad at these times:

1. After you energize the drive and the auto backup period is over.
2. When you use ROM enter or the keypad to change parameters, the drive saves those changes in the drive, waits for the auto backup period to pass, then saves those parameters in the keypad.

Note:

The drive can write data to the keypad a maximum of 100,000 times. If you write data to the keypad more than 100,000 times, you must replace the keypad.

0 : Every 10 minutes

1 : Every 30 minutes

2 : Every 60 minutes

3 : Every 12 hours

◆ o4: Maintenance Monitors

o4 parameters set the expected service life to help you know when to replace parts. The drive will show an alarm to tell you when the replacement part interval is near.

■ Travel Direction Change Counter

The Travel Direction Change Counter counts the number of travel direction changes of the elevator car and notifies the time to replace the rope when the counter value reaches the specified value.

This function helps to save the necessary device to monitor the rope bending changes (travel direction changes) when you use some special elevator ropes with limited lifetime. To enable this function, set *o4-40 = 1 [Travel Direct Change CounterEnbl = Enabled]*.

This counter counts down from the value set in *o4-42 [TravelDirectChange Cnt PresetLvl]*. You must calculate the maximum allowable number of direction changes for the ropes according to EN 81-50 or other applicable definitions and set a correct value to *o4-42*.

When the travel direction of the elevator car changes, the MFDO terminal set for *H2-xx = 75 [TDCC Pulse Output]* outputs the TDCC pulse for 0.5 s to decrease the counter value. Use *U4-65 [RemainDirectChngHigh]* and *U4-64 [RemainDirect ChngLow]* to monitor the current remaining counter value.

When the counter value reaches *o4-41 [Travel Direct Counter AlarmLevel]*, the drive detects a *TCA [TDCC Alarm]*. The drive can continue to operate the elevator until the counter value reaches 0.

When the counter value reaches 0, the drive detects a *TCF [TDCC Fault]* after it completes the current travel and stops operation. The drive cannot operate the elevator until you replace the rope and reset the counter value.

A password handling procedure makes sure that the drive does not do more than the allowable maximum number of direction changes.

For manipulation prevention purposes, these two types of counters are available:

- Total counter
  Counts the total number of direction changes throughout the complete operation lifetime of the drive.
- Preset action counter
  Counts the number of counter preset actions.

You cannot set these counters to a value when the function is enabled, and the TDCC password is necessary to reset the value.

Note:

- You can use this function only with an analog frequency reference when the MFDI signals give the direction instead of the speed reference polarity. The drive takes the direction from an Up/Down command only, and does not take it from the polarity of the speed reference.
- To judge the necessity of rope replacement, always check the actual counter value. The drive has *U4-68 [Est. Time To Service]*, but this is a supporting auxiliary function that is not safe and might fail.
- It is necessary to install a battery in the keypad and use the Real Time Clock (RTC) function of the drive to do estimation.

Set up the Travel Direction Change Counter and Password for the First Time

1. Set *o4-40 = 1 [Travel Direct Change CounterEnbl = Enabled]*.
   When you change to *o4-40 = 1*, the keypad shows a *TCS [TDCC Setup]* alarm.
2. Calculate the maximum allowable number of travel direction changes for the ropes, then set a correct value to *o4-42 [TravelDirectChange Cnt PresetLvl]* in units of 1000.
   After you set the value, *o4-42* changes back to “0”.
3. Check the set value in *U4-65 [RemainDirectChngHigh]* and *U4-64 [RemainDirect ChngLow]* (current value of the TDCC down counter).

   Note:

   You can check the last value you set in *U4-60 [Last Dir Chng Preset]* in units of 1000. This monitor stays at that value until the next preset action while the down counter counts.
4. Set a password to *o4-44 [Travel Direct ChgCntr Passwd Set]*.

After you set the password, *o4-44* changes back to “0”.

5. Set the same password again to *o4-44*.
   After you set the password, *o4-44* changes to “1”. This identifies that the password has been set.
6. Log the function activation and the related data including these values in the maintenance logbook of the facility:
   - “Total TDCC” shown in *U4-67 [TotalDirChng High]* and *U4-66 [TotalDirChng Low]*
   - *U4-69 [Total TDCC Presets]*

Edit Travel Direction Change Counter Parameters

1. Enter the correct password in *o4-44 [Travel Direct ChgCntr Passwd Set]*.
2. When *o4-44* changes to “2”, it identifies that the entered password was correct and you can now edit TDCC parameters.
   After you re-energize the drive or if you enter a wrong password in *o4-44*, *o4-44* is shown again with a value of “1”. It identifies that the parameter lock is active again.

Note:

If you forgot the password, contact Yaskawa or your nearest sales representative.

Travel Direction Change Counter Setup after Rope Replacement

1. Do the same steps as described in *Edit Travel Direction Change Counter Parameters on page 674*.
2. Calculate the maximum allowable number of travel direction changes for the ropes, then set a correct value to *o4-42 [TravelDirectChange Cnt PresetLvl]* in units of 1000.
   After you set the value, *o4-42* changes back to “0”.
3. Check the set value in *U4-65 [RemainDirectChngHigh]* and *U4-64 [RemainDirect ChngLow]* (current value of the TDCC down counter).

Note:

You can check the last value you set in *U4-60 [Last Dir Chng Preset]* in units of 1000. This monitor stays at that value until the next preset action while the down counter counts.

4. Log the executed action and the related data including these values in the maintenance logbook of the facility:
   - “Total TDCC” shown in *U4-67 [TotalDirChng High]* and *U4-66 [TotalDirChng Low]*
   - “Total TDCC Presets Counter” shown in *U4-69 [Total TDCC Presets]*

Replace Broken Drive with Enabled and Password-Protected Travel Direction Change Counter

When you replace a broken drive, do these steps:

1. Check these values and note them with a calendar date of the drive replacement action in the maintenance logbook of the facility:
   - The current counter values shown in *U4-65 [RemainDirectChngHigh]* and *U4-64 [RemainDirect ChngLow]*
   - “Total TDCC” shown in *U4-67 [TotalDirChng High]* and *U4-66 [TotalDirChng Low]*
   - “Total TDCC Presets Counter” shown in *U4-69 [Total TDCC Presets]*
   - “TDCC Alarm Level” set in *o4-41 [Travel Direct Counter AlarmLevel]*
2. Set parameters, except for the Travel Direction Change Counter parameters, to the new drive, then do a test run.

Note:

When the drive size is the same, you can use the copy function of the LCD keypad to transfer the parameter settings to the new drive.

3. Set *o4-40 = 1 [Travel Direct Change CounterEnbl = Enabled]* to enable the Travel Direction Change Counter.
4. Set the desired password twice in *o4-44 [Travel Direct ChgCntr Passwd Set]*.
   After you set the password, *o4-44* changes to “1”. This identifies that the password has been set.
5. Round the value of *U4-65* and *U4-64* to units of 1000, then set the rounded value in *o4-42 [TravelDirectChange Cnt PresetLvl]*.
   Example:
   When the rounded value is 33000 direction changes, set *o4-42 = “33k”*. Then, *U4-65* shows “33k” and *U4-64* shows “0”.
6. Set *o4-41* to the value of the old drive in units of 1000 direction changes to transfer the “TDCC Alarm Level” to the new drive.
7. Check these values shown in the new drive monitors after TDCC activation and note them in the logbook together with the information about the replacement action:
   - “Total TDCC” shown in *U4-67* and *U4-66*
   - “Total TDCC Presets Counter” shown in *U4-69*

Note:
- When the drive is new, "Total TDCC Presets Counter" will show "1". This identifies the executed preset action. When you have not done travels with the new drive, "Total TDCC" will show "0".
- The "Total TDCC Presets Counter" (counts number of counter preset actions) and you cannot reset or change the "Total TDCC".
- It is not necessary to apply the values of the replaced drive for "Total TDCC" and "Total TDCC Presets Counter" monitors to the new drive. Important is only to log the values during each maintenance action.

- When you check the differences between the current values and the previously logged values, you can detect a manipulation. Check whether the number of direction changes since the last maintenance action aligns with the given drop of the value in TDCC monitors *U4-65* and *U4-64*. There should never be undocumented changes of the "Total TDCC Presets Counter". These checks will identify if the counter value is unintentionally reset.
- The "Total TDCC" would wrap to 0 when being incremented from 65535999. The "Total TDCC Presets Counter" would wrap to 0 when being incremented from 63.
- Yaskawa recommends that you log the monitor values from time to time during maintenance, because it may not be possible to read the monitor values if you cannot energize the drive or when you replace a broken drive. If you cannot read the values, estimate the monitor values from the recorded values and determine whether rope replacement is necessary.

Clear U4-68 [Est. Time To Service]

1. Do the same steps as described in *Edit Travel Direction Change Counter Parameters on page 674*.
2. Set *o4-40 = 0 [Travel Direct Change CounterEnbl = Disabled]*.

   Note:
   This resets the value of *U4-68* and deletes the password, but keeps counter values.
3. Set *o4-40 = 1 [Enabled]*.
   When you change to *o4-40 = 1*, the keypad shows a *TCS [TDCC Setup]* alarm.
4. Set a password to *o4-44 [Travel Direct ChgCntr Passwd Set]*.
   After you set the password, *o4-44* changes back to "0".
5. Set the same password again to *o4-44*.
   After you set the password, *o4-44* changes to "1". This identifies that the password has been set.

   Note:
   The number of days in *U4-68* will be shown as 65535 until actual calculation data is available.
6. Log the action and the related data in the maintenance logbook of the facility.

Update Drive Software

1. Note the TDCC related data as described in *Replace Broken Drive with Enabled and Password-Protected Travel Direction Change Counter on page 674*.
2. Do the same steps as described in *Edit Travel Direction Change Counter Parameters on page 674*.
3. Set *o4-40 = 0 [Travel Direct Change CounterEnbl = Disabled]*.
4. Flash the software.
5. Initialize the drive as described in the related instructions for a software update. If the keypad shows *CPF06 [Control Circuit Error (EEPROM memory Data Error)]*, follow the instructions in this manual.
6. Commission TDCC function as described for a new drive in *Replace Broken Drive with Enabled and Password-Protected Travel Direction Change Counter on page 674*.
7. Log the action and the related data in the maintenance logbook of the facility.

■ o4-01: Elapsed Operating Time Setting

No. (Hex.)	Name	Description	Default (Range)
o4-01 (050B) Expert	Elapsed Operating Time Setting	V/f OLV CLV CLV/PM Sets the initial value of the cumulative drive operation time in 10-hour units.	0 h (0 - 9999 h)

When you select *o4-01* on the keypad, it will show the current value of *U4-01* in units of 10 hours (h). When the *o4-01* setting changes, the count of *U4-01* starts again as specified by the setting of *o4-01*.

Note:
The drive sets *o4-01* in 10-hour (h) units. When *o4-01 = 30*, *U4-01 [Cumulative Ope Time] will show "300 h"*.

■ o4-02: Elapsed Operating Time Selection

No. (Hex.)	Name	Description	Default (Range)
o4-02 (050C) Expert	Elapsed Operating Time Selection	V/f OLV CLV CLV/PM Sets the condition that counts the cumulative operation time.	0 (0, 1)

0 : U4-01 Shows Total Power-up Time

Counts the time from when the drive is energized to when it is de-energized.

1 : U4-01 Shows Total RUN Time

Counts the time that the drive outputs voltage.

■ o4-03: Fan Operation Time Setting

No. (Hex.)	Name	Description	Default (Range)
o4-03 (050E) Expert	Fan Operation Time Setting	V/f OLV CLV CLV/PM Sets the value from which to start the cumulative drive cooling fan operation time in 10-hour units.	0 h (0 - 9999 h)

Use monitor *U4-03 [Cooling Fan Ope Time]* to view the total operation time of the cooling fan. When you replace a cooling fan, set *o4-03 = 0* to reset *U4-03*. Select *o4-03* on the keypad to show the current value of *U4-03* in 10-hour (h) units. When the *o4-03* setting changes, the count of *U4-03* starts again as specified by the setting of *o4-03*.

Note:

The drive sets *o4-03* in 10-hour (h) units. When *o4-03 = 30*, *U4-03 [Cooling Fan Ope Time]* will show “300 h”.

■ o4-05: Capacitor Maintenance Setting

No. (Hex.)	Name	Description	Default (Range)
o4-05 (051D) Expert	Capacitor Maintenance Setting	V/f OLV CLV CLV/PM Sets the *U4-05 [CapacitorMaintenance]* monitor value.	0% (0 - 150%)

When you replace a drive, set *o4-05 = 0* to reset *U4-05*. When the *o4-05* setting changes, the count of *U4-05* starts again as specified by the setting of *o4-05*. After you complete the configuration, *o4-05* automatically resets to *0*.

Note:

The maintenance period changes for different operating environments.

■ o4-07: Softcharge Relay Maintenance Set

No. (Hex.)	Name	Description	Default (Range)
o4-07 (0523) Expert	Softcharge Relay Maintenance Set	V/f OLV CLV CLV/PM Sets the *U4-06 [PreChargeRelayMainte]* monitor value.	0% (0 - 150%)

When you replace a drive, set *o4-07 = 0* to reset *U4-06*. When the *o4-07* setting changes, the count of *U4-06* starts again as specified by the setting of *o4-07*. After you complete the configuration, *o4-07* automatically resets to *0*.

Note:

The maintenance period changes for different operating environments.

■ o4-09: IGBT Maintenance Setting

No. (Hex.)	Name	Description	Default (Range)
o4-09 (0525) Expert	IGBT Maintenance Setting	V/f OLV CLV CLV/PM Sets the *U4-07 [IGBT Maintenance]* monitor value.	0% (0 - 150%)

When you replace a drive, set *o4-09 = 0* to reset *U4-07*. When the *o4-09* setting changes, the count of *U4-07* starts again as specified by the setting of *o4-09*. After you complete the configuration, *o4-09* automatically resets to *0*.

Note:

The maintenance period changes for different operating environments.

■ o4-11: Fault Trace/History Initialize

No. (Hex.)	Name	Description	Default (Range)
o4-11 (0510) Expert	Fault Trace/History Initialize	V/f OLV CLV CLV/PM Resets the records of monitors *U2-xx [Fault Trace]*, *U3-xx [Fault History]*, and *U9-xx [Fault Trace]*.	0 (0, 1)

Note:

When you initialize the drive with *A1-03 [Initialize Parameters]*, the drive will not reset the records for *U2-xx*, *U3-xx*, and *U9-xx*.

0 : Disabled

Keeps the records of monitors *U2-xx*, *U3-xx*, and *U9-xx*.

1 : Enabled

Resets the records for monitors *U2-xx*, *U3-xx*, and *U9-xx*. After the reset, the drive automatically resets *o4-11* to 0.

■ o4-12: kWh Monitor Initialization

No. (Hex.)	Name	Description	Default (Range)
o4-12 (0512) Expert	kWh Monitor Initialization	V/f OLV CLV CLV/PM Resets the monitor values for *U4-10 [kWh, Lower 4 Digits]* and *U4-11 [kWh, Upper 5 Digits]*.	0 (0, 1)

Note:

When you initialize the drive with *A1-03 [Initialize Parameters]*, the drive will not reset *U4-10* and *U4-11*.

0 : No Reset

Keeps the monitor values for *U4-10* and *U4-11*.

1 : Reset

Resets the values of *U4-10* and *U4-11*. After the reset, the drive automatically resets *o4-12* to *0*.

■ o4-13: Number of Travels Counter Reset

No. (Hex.)	Name	Description	Default (Range)
o4-13 (0528) Expert	Number of Travels Counter Reset	V/f OLV CLV CLV/PM Resets the monitor values for *U4-24 [Number of Travels (Low)]* and *U4-25 [Number of Travels (High)]*.	0 (0, 1)

0 : No Reset

Keeps the monitor values for *U4-24* and *U4-25*.

1 : Reset

Resets the values of *U4-24* and *U4-25*. After the reset, the drive automatically resets *o4-13* to 0.

■ o4-15: Maintenance Alarm Snooze Period

No. (Hex.)	Name	Description	Default (Range)
o4-15 (0537) Expert	Maintenance Alarm Snooze Period	V/f OLV CLV CLV/PM Sets the snooze period of maintenance alarms as a percentage of the lifetime of the component. After a maintenance alarm output has been triggered and the alarm is reset, this parameter determines the level that will trigger the next alarm for the same component. The same alarm will be triggered by the detection level that triggered the original alarm, plus the level set in *o4-15*.	2% (0 - 20%)

Note:

Parameter *A1-03 [Initialize Parameters]* does not initialize this parameter.

■ o4-16: Maintenance Monitoring Selection

No. (Hex.)	Name	Description	Default (Range)
o4-16 (0176) Expert	Maintenance Monitoring Selection	V/f OLV CLV CLV/PM Sets the function to use bit 0 to bit 3 to 1 (ON) or 0 (OFF) to enable and disable four Maintenance Monitors. From left to right, the digits set *LT-4 [IGBT Maintenance Time]*, *LT-3 [SoftChargeBypassRelay MainteTime]*, *LT-2 [Capacitor Maintenance Time]*, and *LT-1 [Cooling Fan Maintenance Time]* in order.	1000 (0000 - 1111)

Note:

Parameter *A1-03 [Initialize Parameters]* does not initialize this parameter.

All bits = 0 : Maintenance Monitors are disabled

bit 0 : LT1 (cooling fan)

bit 1 : LT2 (DC bus capacitors)

bit 2 : LT3 (soft-charge bypass relay)

bit 3 : LT4 (IGBT)

IGBTs have passed 90% of the their life expectancy.

■ o4-22: Time Format

No. (Hex.)	Name	Description	Default (Range)
o4-22 (154F) RUN	Time Format	V/f OLV CLV CLV/PM Sets the time display format. This parameter is only available when you use an LCD keypad.	0 (0 - 2)

Sets the display of the time shown in the upper-left of the LCD keypad screen.

0 : 24 Hour Clock

1 : 12 Hour Clock

2 : 12 Hour JP Clock

■ o4-23: Date Format

No. (Hex.)	Name	Description	Default (Range)
o4-23 (1550) RUN	Date Format	V/f OLV CLV CLV/PM Sets the date display format. This parameter is only available when you use an LCD keypad.	0 (0 - 2)

Sets the date format that the drive uses for the fault history and other records.

0 : YYYY/MM/DD

1 : DD/MM/YYYY

2 : MM/DD/YYYY

Note:

The Fault History in the Monitor Mode shows when faults occurred. Refer to *Show Fault History on page 141* for more information.

■ o4-24: bAT Detection Selection

No. (Hex.)	Name	Description	Default (Range)
o4-24 (310F) RUN Expert	bAT Detection Selection	V/f OLV CLV CLV/PM Sets operation when the drive detects *bAT [Keypad Battery Low Voltage]* and *TiM [Keypad Time Not Set]*.	0 (0 - 2)

0 : Disable

The drive will not detect *bAT* or *TiM*.

1 : Enable (Alarm Detected)

TiM or *bAT* shows on the keypad, and operation continues. The output terminal set for *Alarm [H2-01 to H2-05 = 10]* activates.

2 : Enable (Fault Detected)

The output turns off and the motor coasts to stop. Fault relay output terminal MA-MC turns ON, and MB-MC turns OFF.

■ o4-40: Travel Direct Change CounterEnbl

No. (Hex.)	Name	Description	Default (Range)
o4-40 (303D)	Travel Direct Change CounterEnbl	V/f OLV CLV CLV/PM Sets the function to enable the Travel Direction Change Counter.	0 (0, 1)

Note:
DriveWizard does not show this parameter.

0 : Disabled

1 : Enabled

Refer to *Travel Direction Change Counter on page 673* for more information.

■ o4-41: Travel Direct Counter AlarmLevel

No. (Hex.)	Name	Description	Default (Range)
o4-41 (303E)	Travel Direct Counter AlarmLevel	V/f OLV CLV CLV/PM Sets the detection level for *TCA [TDCC Alarm]* in units of 1000 direction changes. When you want to set to one million direction changes, set this parameter = 1000.	50 (0 - 10000)

Note:
DriveWizard does not show this parameter.

Refer to *Travel Direction Change Counter on page 673* for more information.

■ o4-42: TravelDirectChange Cnt PresetLvl

No. (Hex.)	Name	Description	Default (Range)
o4-42 (303F)	TravelDirectChange Cnt PresetLvl	V/f OLV CLV CLV/PM Sets the number of allowable direction changes after a rope change in units of 1000 direction changes. When you want to set to one million direction changes, set this parameter = 1000. The direction counter is set to the input value and the parameter is changed back to 0.	0 (0 - 65535)

Note:
DriveWizard does not show this parameter.

Refer to *Travel Direction Change Counter on page 673* for more information.

■ o4-44: Travel Direct ChgCntr Passwd Set

No. (Hex.)	Name	Description	Default (Range)
o4-44 (3041)	Travel Direct ChgCntr Passwd Set	V/f OLV CLV CLV/PM Sets the password to use the Travel Direction Change Counter. You must enter the password identically two times. The active password locks parameters *o4-40 [Travel Direct Change CounterEnbl]* to *o4-42 [TravelDirectChange Cnt PresetLvl]* from editing and starts the Travel Direction Change counting process. You must enable *o4-40* before you set the password. When you enter the same password again, the drive unlocks the parameters again.	0 (0 - FFFF)

Note:
- DriveWizard does not show this parameter.
- This parameter always resets to 0 after a user input.
- If you set *o4-40 = 1 [Enabled]* but you do not define the password, the drive detects *TCS [TDCC Setup]*. This alarm has higher priority than *TCA [TDCC Alarm]*.

Refer to *Travel Direction Change Counter on page 673* for more information.

◆ o5: Log Function

The data log function saves drive status information as a CSV file in the microSD memory card in the keypad. Monitors *Ux-xx* are the source of data log information. You can record a maximum of 10 monitors.

Change the LCD keypad screen from the main menu to the Diagnostic Tools screen and select the data log function. Set the number of the monitor to record and the sampling time, then start to record the data log.

Table 12.34 Setting Parameters for Data Log Items

No.	Name	Default	Data Log Monitors
o5-03	Log Monitor Data 1	101	*U1-01 [Speed Reference]*
o5-04	Log Monitor Data 2	102	*U1-02 [Output Speed]*
o5-05	Log Monitor Data 3	103	*U1-03 [Output Current]*
o5-06	Log Monitor Data 4	107	*U1-07 [DC Bus Voltage]*
o5-07	Log Monitor Data 5	*A1-02 = 0, 2*: 000 *A1-02 = 3, 7*: 109	*A1-02 = 0, 2*: Not selected *A1-02 = 3, 7*: *U1-09 [Torque Reference]*
o5-08	Log Monitor Data 6	*A1-02 = 0, 2*: 116 *A1-02 = 3, 7*: 105	*A1-02 = 0, 2*: *U1-16 [SFS Output Speed]* *A1-02 = 3, 7*: *U1-05 [Speed Feedback]*
o5-09	Log Monitor Data 7	110	*U1-10 [Input Terminal Status]*
o5-10	Log Monitor Data 8	112	*U1-12 [Drive Status]*
o5-11	Log Monitor Data 9	000	Not selected
o5-12	Log Monitor Data 10	000	Not selected

Note:
- Do not de-energize the drive or disconnect the keypad from the drive during log transfer communication. A loss of connection can cause the log function to fail after you restore power or connect the keypad.
- You can use a microSDHC card that has a maximum of 32 GB capacity.

■ Log File Specifications

Item	Specification
File storage location	A folder called [Log_File] is created in the root directory of the microSD card.
Filename	GLOG0xxx.csv **Note:** [xxx] identifies a 3-digit decimal number
Maximum number of files	999 (GLOG0001.csv to GLOG0999.csv)
Character code	ASCII code
Line break code	<CR><LF>
Separating character	[,] (Commas)
Header rows	First Row: Drive information including the drive model, software version, control method, and sampling time Second Row: Log data information including the monitor number, number decimal points, and unit code

■ Log File Configuration

The [Log_Files] folder is created in the root directory of the microSD memory card. This is where the log data is stored as CSV files. Log data files are created in this configuration. The number of rows changes when the number of selected monitors change.

First Row	Drive information
Second Row	Log data information
Third Row	Log data 1
:	Log data 2
:	Log data 3
:	:
Last Row	Log data n

First Row: Drive Information

This example shows the data text strings and data generated for the first row of log data.

Example of generated data: 00,0012,160107111230,ES700,VSLA02010,2,68,1000,000001

No.	Item	Number of Characters	Example	Description
1	Attribute	2	00	[00] shows that the record is a drive information record.
2	File number	4	0012	Generates the [xxx] part (a 3-digit decimal number) of the [GLOG0xxx.csv] filename of the log data in hexadecimal format. Example filename of [GLOG0018.csv]: 018 (Dec.) = 0012 (Hex.)

No.	Item	Number of Characters	Example	Description
3	Time stamp *1	12	160107111230	Data log data was generated (YYMMDDHHMMSS) • Date: 20YY/MM/DD • Time in 24-hour format: HH:MM:SS Example data of [160107111230]: 11:12:30 on January 7, 2016
4	Model	5	ES700	Drive model information
5	Software number	9	VSLA02010	Drive software number
6	Control Method Selection	1	2	Setting value (Hex.) of *A1-02 [Control Method Selection]*
7	Drive capacity	2	68	Setting value (Hex.) of *o2-04 [Drive Model (KVA) Selection]*
8	Sampling time	5 (Maximum)	1000	Setting value (Dec.) of *o5-02 [Log Sampling Interval]* Unit: ms
9	Row number	6	000001	Row number (Hex.) in the data log file

*1 If you do not set the time in the keypad, the text string of [000000000000] is generated to show the time.

Second Row: Log Data Information

This example shows the data text strings and data generated for the second row of log data.

Example of generated data:
01,0012,160107111230,0101,0201,0102,0201,0103,0206,0107,0005,0108,0209,0000,0000,0000,0000,0000,0000,0000,0000,0000,0000,0000,0000,0000,0000,0000,0000,000002

No.	Item	Number of Characters	Description
1	Attribute	2	[01] shows that the record is a log data information record.
2	File number	4	Generates the [xxx] part (a 3-digit decimal number) of the [GLOG0xxx.csv] filename of the log data in hexadecimal format.
3	Time stamp	12	Data log data was generated (YYMMDDHHMMSS)
4	Monitor number 1 *1	4	Monitor number selected by *o5-03 [Log Monitor Data 1]* Example: 0101 (Dec.) for *U1-01*
5	Monitor unit 1 *2	4	Unit code and number of decimal places used for the monitor selected with *o5-03* Example when *U1-01 = 30.00 Hz*: Number of decimal places = 2, Hz unit code = 01, monitor unit 1 = 0201 (Hex.)
6	Monitor number 2	4	Monitor number (Dec.) set to *o5-04 [Log Monitor Data 2]*
7	Monitor unit 2	4	Unit code and number of decimal places used for the monitor selected with *o5-04*
:	:	:	:
22	Monitor number 10	4	Monitor number (Dec.) set to *o5-12 [Log Monitor Data 10]*
23	Monitor unit 10	4	Unit code and number of decimal places used for the monitor selected with *o5-12*
24 - 27	Reserved	4	-
28	Row number	6	Row number (Hex.) in the data log file

*1 If there is no data log monitor selected, the text string of [0000] is generated.
*2 Refer to Table 12.35 for information about unit codes.

Table 12.35 Unit Codes

Unit Code (Hex.)	Unit	Unit Code (Hex.)	Unit	Unit Code (Hex.)	Unit	Unit Code (Hex.)	Unit
00	–	08	PPR	10	H	18	0H
01	Hz	09	kW	11	V	19	–
02	RPM	0A	Ω	12	us	1A	–
03	%	0B	ms	13	min	1B	–
04	VAC	0C	kHz	14	°C	1C	–
05	VDC	0D	PSI	15	W	1D	–
06	A	0E	MPM	16	kWH	1E	–
07	sec	0F	FPM	17	MWH	1F	–

Third and Subsequent Rows: Log Data

This example shows the data text strings and data generated for the third row of log data.

Example of generated data:
02,0012,160107111239,1770,1770,00BE,0118,0028,0000,0000,0000,0000,0000,0000,0000,00000C

No.	Item	Number of Characters	Description
1	Attribute	2	[02] shows that the record is a monitor data record.
2	File number	4	Generates the [xxx] part (a 3-digit decimal number) of the [GLOG0xxx.csv] filename of the log data in hexadecimal format.
3	Time stamp	12	Data log data was generated (YYMMDDHHMMSS)
4	Log Monitor Data 1	4	Log monitor data (Hex.) of the monitor selected with *o5-03 [Log Monitor Data 1]*
5	Log Monitor Data 2	4	Log monitor data (Hex.) of the monitor selected with *o5-04 [Log Monitor Data 2]*
:	:	:	:
13	Log Monitor Data 10	4	Log monitor data (Hex.) of the monitor selected with *o5-12 [Log Monitor Data 10]*
14	Reserved	4	-
15	Encoding data	4	Log Monitor Data 1 to 10 Code Data (Hex.) Bits 0 to 9 show the encoding of log monitor data 1 to 10. A bit value of 1 shows that the data represents a negative value. (Log monitor data 1 to 10 are absolute value data without encoding) Example when log monitor data 2, 5, and 8 show negative values: Bits 1, 4, and 7 have values of 1, and the encoding data = 0010010010 (Bin.) = 0092 (Hex.)
16	Row number	6	Row number (Hex.) in the data log file

■ o5-01: Log Start/Stop Selection

No. (Hex.)	Name	Description	Default (Range)
o5-01 (1551) RUN Expert	Log Start/Stop Selection	V/f OLV CLV CLV/PM Sets the data log function. This parameter is only available when you use an LCD keypad.	0 (0, 1)

0 : OFF

Stops the data log.

1 : ON

Starts the data log as specified by the sampling cycle set in *o5-02 [Log Sampling Interval]*.

■ o5-02: Log Sampling Interval

No. (Hex.)	Name	Description	Default (Range)
o5-02 (1552) RUN Expert	Log Sampling Interval	V/f OLV CLV CLV/PM Sets the data log sampling cycle. This parameter is only available when you use an LCD keypad.	100 ms (100 - 60000 ms)

■ o5-03: Log Monitor Data 1

No. (Hex.)	Name	Description	Default (Range)
o5-03 (1553) RUN Expert	Log Monitor Data 1	V/f OLV CLV CLV/PM Sets the data log monitor. This parameter is only available when you use an LCD keypad.	101 (000, 101 - 999)

Note:
- Set the *x-xx* part of the *Ux-xx [Monitors]*. For example, set *o5-03 = 101* to monitor *U1-01 [Speed Reference]*.
- When it is not necessary to set a data log monitor, set this parameter to *000*.

■ o5-04: Log Monitor Data 2

No. (Hex.)	Name	Description	Default (Range)
o5-04 (1554) RUN Expert	Log Monitor Data 2	V/f OLV CLV CLV/PM Sets the data log monitor. This parameter is only available when you use an LCD keypad.	102 (000, 101 - 999)

Note:
- Set the *x-xx* part of the *Ux-xx [Monitors]*. For example, set *o5-04 = 102* to monitor *U1-02 [Output Speed]*.
- When it is not necessary to set a data log monitor, set this parameter to *000*.

■ o5-05: Log Monitor Data 3

No. (Hex.)	Name	Description	Default (Range)
o5-05 (1555) RUN Expert	Log Monitor Data 3	V/f OLV CLV CLV/PM Sets the data log monitor. This parameter is only available when you use an LCD keypad.	103 (000, 101 - 999)

Note:
- Set the *x-xx* part of the *Ux-xx [Monitors]*. For example, set *o5-05 = 103* to monitor *U1-03 [Output Current]*.
- When it is not necessary to set a data log monitor, set this parameter to *000*.

■ o5-06: Log Monitor Data 4

No. (Hex.)	Name	Description	Default (Range)
o5-06 (1556) RUN Expert	Log Monitor Data 4	V/f OLV CLV CLV/PM Sets the data log monitor. This parameter is only available when you use an LCD keypad.	107 (000, 101 - 999)

Note:
- Set the *x-xx* part of the *Ux-xx [Monitors]*. For example, set *o5-06 = 107* to monitor *U1-07 [DC Bus Voltage]*.
- When it is not necessary to set a data log monitor, set this parameter to *000*.

■ o5-07: Log Monitor Data 5

No. (Hex.)	Name	Description	Default (Range)
o5-07 (1557) RUN Expert	Log Monitor Data 5	V/f OLV CLV CLV/PM Sets the data log monitor. This parameter is only available when you use an LCD keypad.	Determined by A1-02 (000, 101 - 999)

Note:
- The default setting changes when *A1-02 [Control Method Selection]* changes:
  – *A1-02 = 0, 2 [V/f, OLV]*: 000
  – *A1-02 = 3, 7 [CLV, CLV/PM]*: 109
- Set the *x-xx* part of the *Ux-xx [Monitors]*. For example, set *o5-07 = 108* to monitor *U1-08 [Output Power]*.
- When it is not necessary to set a data log monitor, set this parameter to *000*.

■ o5-08: Log Monitor Data 6

No. (Hex.)	Name	Description	Default (Range)
o5-08 (1558) RUN Expert	Log Monitor Data 6	V/f OLV CLV CLV/PM Sets the data log monitor. This parameter is only available when you use an LCD keypad.	Determined by A1-02 (000, 101 - 999)

Note:
- The default setting changes when *A1-02 [Control Method Selection]* changes:
  – *A1-02 = 0, 2 [V/f, OLV]*: 116
  – *A1-02 = 3, 7 [CLV, CLV/PM]*: 105
- Set the *x-xx* part of the *Ux-xx [Monitors]*. For example, set *o5-08 = 101* to monitor *U1-01 [Speed Reference]*.
- When it is not necessary to set a data log monitor, set this parameter to *000*.

■ o5-09: Log Monitor Data 7

No. (Hex.)	Name	Description	Default (Range)
o5-09 (1559) RUN Expert	Log Monitor Data 7	V/f OLV CLV CLV/PM Sets the data log monitor. This parameter is only available when you use an LCD keypad.	110 (000, 101 - 999)

Note:
- Set the *x-xx* part of the *Ux-xx [Monitors]*. For example, set *o5-09 = 101* to monitor *U1-01 [Speed Reference]*.
- When it is not necessary to set a data log monitor, set this parameter to *000*.

■ o5-10: Log Monitor Data 8

No. (Hex.)	Name	Description	Default (Range)
o5-10 (155A) RUN Expert	Log Monitor Data 8	V/f OLV CLV CLV/PM Sets the data log monitor. This parameter is only available when you use an LCD keypad.	112 (000, 101 - 999)

Note:
- Set the *x-xx* part of the *Ux-xx [Monitors]*. For example, set *o5-10 = 101* to monitor *U1-01 [Speed Reference]*.
- When it is not necessary to set a data log monitor, set this parameter to *000*.

■ o5-11: Log Monitor Data 9

No. (Hex.)	Name	Description	Default (Range)
o5-11 (155B) RUN Expert	Log Monitor Data 9	V/f OLV CLV CLV/PM Sets the data log monitor. This parameter is only available when you use an LCD keypad.	0 (000, 101 - 999)

Note:
- Set the *x-xx* part of the *Ux-xx [Monitors]*. For example, set *o5-11 = 101* to monitor *U1-01 [Speed Reference]*.
- When it is not necessary to set a data log monitor, set this parameter to *000*.

■ o5-12: Log Monitor Data 10

No. (Hex.)	Name	Description	Default (Range)
o5-12 (155C) RUN Expert	Log Monitor Data 10	V/f OLV CLV CLV/PM Sets the data log monitor. This parameter is only available when you use an LCD keypad.	0 (000, 101 - 999)

Note:
- Set the *x-xx* part of the *Ux-xx [Monitors]*. For example, set *o5-12 = 101* to monitor *U1-01 [Speed Reference]*.
- When it is not necessary to set a data log monitor, set this parameter to *000*.

12.12 S: Elevator Parameters

S parameters set these functions and faults for the elevator application:

- Braking sequence
- Slip Compensation for elevators
- Start/Stop optimization
- Rescue Operation
- Elevator-related faults

◆ S1: Brake/Contactor Sequence

S1 parameters set the brake sequence and contactor sequence.

The drive supports these two types of brake sequences:

- A brake sequence that uses an MFAI terminal set for *H3-xx = 14 [MFAI Function Selection = Torque Compensation]* to control torque compensation at start
- A brake sequence that does not set the torque compensation level at start

Refer to *Brake Sequence on page 175* for more information.

■ S1-01: Zero Speed Level at Stop

No. (Hex.)	Name	Description	Default (Range)
S1-01 (0680)	Zero Speed Level at Stop	V/f OLV CLV CLV/PM Sets the speed to begin applying DC Injection (or Position Lock) when *b1-03 = 0 [Stopping Method Selection = Ramp to Stop]* as a percentage of *E1-04 [Maximum Output Frequency]*.	Determined by A1-02 (0.000 - 9.999%)

When the control method selected in *A1-02 [Control Method Selection]* changes, the *S1-01* function changes.

Parameter Settings	Functions of S1-01
A1-02 = 0, 2 [V/f, OLV]	Parameter *S1-01* sets the speed to start DC Injection Braking at stop. When the output speed ≤ *S1-01*, the drive will inject the quantity of DC current set in *S1-03 [DC Injection Current at Stop]* into the motor for the time set in *S1-05 [DC Inj/Pos Lock Time at Stop]*. 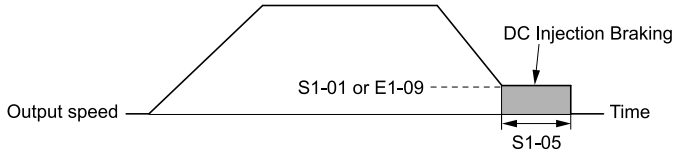 **Figure 12.59 DC Injection Braking at Stop** **Note:** When *S1-01 ≤ E1-09 [Minimum Output Frequency]*, the drive will start DC Injection Braking from the frequency set in *E1-09*.
A1-02 = 3, 7 [CLV, CLV/PM]	Parameter *S1-01* sets the speed to start Position Lock at stop. When the output speed ≤ *S1-01*, the drive will do Position Lock for the time set in *S1-05*. 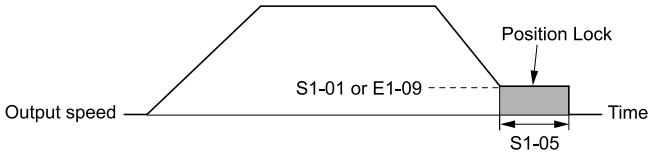 **Figure 12.60 Position Lock at Stop** **Note:** When *S1-01 ≤ E1-09*, the drive will start Position Lock from the frequency set in *E1-09*.

■ S1-02: DC Injection Current at Start

No. (Hex.)	Name	Description	Default (Range)
S1-02 (0681)	DC Injection Current at Start	V/f OLV CLV CLV/PM Sets the amount of current to use for DC Injection at start as a percentage of the continuous rated output current.	57% (0 - 100%)

■ S1-03: DC Injection Current at Stop

No. (Hex.)	Name	Description	Default (Range)
S1-03 (0682)	DC Injection Current at Stop	V/f OLV CLV CLV/PM Sets the amount of current to use for DC Injection at stop as a percentage of the continuous rated output current.	57% (0 - 100%)

■ S1-04: DC Inj/Pos Lock Time at Start

No. (Hex.)	Name	Description	Default (Range)
S1-04 (0683)	DC Inj/Pos Lock Time at Start	V/f OLV CLV CLV/PM Sets the length of time that the drive will do DC Injection at start. When *A1-02 = 3 or 7 [Control Method Selection = CLV or CLV/PM]*, this parameter sets the length of time that the drive will do Position Lock at start. This parameter is disabled when set to *0.00 s*.	Determined by A1-02 (0.00 - 10.00 s)

■ S1-05: DC Inj/Pos Lock Time at Stop

No. (Hex.)	Name	Description	Default (Range)
S1-05 (0684)	DC Inj/Pos Lock Time at Stop	V/f OLV CLV CLV/PM Sets the length of time that the drive will do DC Injection at stop. When *A1-02 = 3 or 7 [Control Method Selection = CLV or CLV/PM]*, this parameter sets the length of time that the drive will do Position Lock at stop. This parameter is disabled when set to *0.00 s*.	0.60 s (0.00 - 10.00 s)

■ S1-06: Brake Release Delay Time

No. (Hex.)	Name	Description	Default (Range)
S1-06 (0685)	Brake Release Delay Time	V/f OLV CLV CLV/PM Sets the delay time between the start of DC injection/Position Lock and the activation of an MFDO terminal set for *H2-xx = 50 [MFDO Function Selection = Brake Control]* to release the brake at the beginning of the ride.	0.20 s (0.00 - 10.00 s)

Adjust this parameter if there is not enough time to develop the appropriate amount of motor flux. When you increase the value of this parameter, also increase the value set in *S1-04 [DC Inj/Pos LockTime at Start]*.

■ S1-07: Brake Close Delay Time

No. (Hex.)	Name	Description	Default (Range)
S1-07 (0686)	Brake Close Delay Time	V/f OLV CLV CLV/PM Sets the delay time between reaching Zero Speed set in *S1-01 [Zero Speed Level at Stop]* and the deactivation of an MFDO terminal set for *H2-xx = 50 [MFDO Function Selection = Brake Control]* to apply the brake at the end of the ride.	0.10 s (0.00 s - S1-05)

Note:

The maximum value for this parameter is the value set in *S1-05 [DC Inj/Pos Lock Time at Stop]*. If you set *S1-05 < S1-07*, the drive detects *oPE21 [Elevator Parameter Setting Fault]*.

■ S1-10: Up/Down Command Delay Time

No. (Hex.)	Name	Description	Default (Range)
S1-10 (0687)	Up/Down Command Delay Time	V/f OLV CLV CLV/PM Sets the delay time until the drive starts operation after it receives an Up/Down command. You must set enough time for the motor contactor on the output side to be active.	0.10 s (0.00 - 1.00 s)

■ S1-11: Output Contactor Open Delay Time

No. (Hex.)	Name	Description	Default (Range)
S1-11 (0688)	Output Contactor Open Delay Time	V/f OLV CLV CLV/PM Sets the delay time to deactivate an MFDO terminal set for *H2-xx = 51 [MFDO Function Selection = Output Contactor Control]* to release the motor contactor after the drive stops and shuts off the output.	0.10 s (0.00 - 1.00 s)

■ S1-12: Output Contactor During Autotune

No. (Hex.)	Name	Description	Default (Range)
S1-12 (06E0)	Output Contactor During Autotune	V/f OLV CLV CLV/PM Sets the function to automatically activate an MFDO terminal set for *H2-xx = 51 [Output Contactor Control]* when the drive starts Auto-Tuning.	0 (0 - 2)

⚠ WARNING Sudden Movement Hazard

Use *S1-12 [Output Contactor During Autotune]* to enable and disable automatic switching of the *Motor Contactor Control* output signal during Auto-Tuning. Before you set *S1-12 = 1 or 2 [Enable or Enabled during A-Tuning and STo]*, make sure that you correctly wire the MFDO terminals set for *H2-xx = 51 [MFDO Function Selection = Motor Contactor Control]* and make sure that they are in the correct state.
Incorrect setting procedures can cause serious injury or death.

0 : Disable
1 : Enable
2 : Enabled during A-Tuning and STo

■ S1-26: Emergency Stop Start Level

No. (Hex.)	Name	Description	Default (Range)
S1-26 (06D7)	Emergency Stop Start Level	V/f OLV CLV CLV/PM Sets the Emergency Stop Start Level as a percentage of *E1-04 [Maximum Output Frequency]*.	10.0% (0.0 - 100.0%)

This parameter is available when *A1-02 = 3 or 7 [Control Method Selection = CLV or CLV/PM]* and *b1-03 = 4 [Stopping Method Selection = Elevator Emergency Stop]*.

When you enter the Stop command or turn OFF the Up/Down command, the drive uses different stopping methods for different conditions of *U1-05 [Speed Feedback]* and *S1-26 [Emergency Stop Start Level]*:

- When *U1-05* ≥ *S1-26*, the drive coasts to stop.
- When *U1-05* < *S1-26*, the drive ramps to stop.

For more information about this function, refer to *Elevator Emergency Stop on page 173*.

◆ S2: Elevator Slip Compensation

S2 parameters set the elevator slip compensation.

The slip compensation function automatically adjusts the speed reference for leveling operation depending on the load measured at constant speed. *S2 parameters* tune the slip compensation function to improve the landing accuracy. Slip Compensation is available when *A1-02 = 0 or 2 [Control Method Selection = V/f or OLV]*.

■ S2-01: Motor Rated Speed

No. (Hex.)	Name	Description	Default (Range)
S2-01 (068F)	Motor Rated Speed	V/f OLV CLV CLV/PM Sets the motor rated speed.	1380 rpm (300 - 1800 rpm)

■ S2-02: Slip Comp Gain during Motoring

No. (Hex.)	Name	Description	Default (Range)
S2-02 (0690) RUN	Slip Comp Gain during Motoring	V/f OLV CLV CLV/PM Sets the slip compensation for leveling speed during motoring. This can help improve the accuracy of leveling.	0.7 (0.0 - 5.0)

■ S2-03: Slip Comp Gain during Regen

No. (Hex.)	Name	Description	Default (Range)
S2-03 (0691) RUN	Slip Comp Gain during Regen	V/f OLV CLV CLV/PM Sets the slip compensation for leveling speed during regeneration. This can help improve the accuracy of leveling.	1.0 (0.0 - 5.0)

■ S2-05: Slip Comp Torq Detect Delay Time

No. (Hex.)	Name	Description	Default (Range)
S2-05 (0693)	Slip Comp Torq Detect Delay Time	V/f OLV CLV CLV/PM Sets a delay time before detecting torque for slip compensation.	1000 ms (0 - 10000 ms)

■ S2-06: Slip Comp Torq Detect FilterTime

No. (Hex.)	Name	Description	Default (Range)
S2-06 (0694)	Slip Comp Torq Detect FilterTime	V/f OLV CLV CLV/PM Sets the filter time constant applied to the torque signal used for the slip compensation value calculation.	500 ms (0 - 2000 ms)

◆ S3: Start/Stop Optimization

S3 parameters set the Anti-Roll Back (ARB) functions.

■ S3-02: Position Lock Gain 2 at Start

No. (Hex.)	Name	Description	Default (Range)
S3-02 (0698) RUN	Position Lock Gain 2 at Start	V/f OLV CLV CLV/PM Sets gain level 2 for the Position Lock at start function. Position Lock at start compensates the motor torque to keep the car position to prevent rollback when the brake is released.	Determined by A1-02 (0.00 - 100.00)

This parameter sets gain to adjust the internal torque reference directly (Anti-Rollback function).

If there is a problem with rollback when the brake is released, increase the value. If motor oscillation occurs during Position Lock, decrease the value.

Note:
- Check the *C5-xx [Auto Speed Regulator (ASR)]* parameters to make sure that the speed control loop settings are correct before you adjust the Position Lock gain.
- When you set *A1-02 = 7 [Control Method Selection = CLV/PM]*, it can trigger a *dv4 [Inversion Prevention Detection]* fault. To correct this, increase the value of this parameter, or increase the value set in *F1-19 [Deviation 4 Detection Selection]*.

■ S3-03: Position Lock Gain at Stop

No. (Hex.)	Name	Description	Default (Range)
S3-03 (0699) RUN	Position Lock Gain at Stop	V/f OLV CLV CLV/PM Sets the Position Lock gain at stop. Position Lock at stop compensates the motor torque to keep the car position until the brake is fully applied.	5 (0 - 100)

Position Lock at stop compensates the motor torque when the motor speed reaches the larger value of *S1-01 [Zero Speed Level at Stop]* or *E1-09 [Minimum Output Frequency]*.

To increase the ability of the drive to hold the car in place, increase the value. If motor oscillation occurs during Position Lock, decrease the value.

Note:
- Check the *C5-xx [Auto Speed Regulator (ASR)]* parameters to make sure that the speed control loop settings are correct before you adjust the Position Lock gain.
- When you set *A1-02 = 7 [Control Method Selection = CLV/PM]*, it can trigger a *dv4 [Inversion Prevention Detection]* fault. To correct this, increase the value set in *S3-02 [Position Lock Gain 2 at Start]*, or increase the value set in *F1-19 [Deviation 4 Detection Selection]*.

■ S3-04: Position Lock Bandwidth

No. (Hex.)	Name	Description	Default (Range)
S3-04 (069A)	Position Lock Bandwidth	V/f OLV CLV CLV/PM Sets the bandwidth around the stop position in which an MFDO terminal set for *H2-xx = 33 [Zero Servo Complete]* activates.	10 (0 - 16383)

The drive outputs the *Zero Servo Complete* signal when the elevator car moves from the Position Lock start point to the position of ±*S3-04*.

■ S3-10: Torque Compensation Ramp Time

No. (Hex.)	Name	Description	Default (Range)
S3-10 (069B) Expert	Torque Compensation Ramp Time	V/f OLV CLV CLV/PM Sets a time constant for the torque reference to reach 300%. This parameter is enabled when *H3-xx = 14 [MFAI Function Selection = Torque Compensation]*.	500 ms (0 - 5000 ms)

■ S3-11: Id Bias

No. (Hex.)	Name	Description	Default (Range)
S3-11 (069C) Expert	Id Bias	V/f OLV CLV CLV/PM Sets the motor d-axis current flowing during startup in 0.1% increments as a percentage of the motor rated current.	5.0% (0.0 - 100.0%)

■ S3-12: Torque Comp. Bias in Down Direct

No. (Hex.)	Name	Description	Default (Range)
S3-12 (069D) Expert	Torque Comp. Bias in Down Direct	V/f OLV CLV CLV/PM Sets the bias added to torque compensation value from the load cell when the elevator car moves downward as a percentage of the motor rated torque in 0.1% increments.	0.0% (-40.0 - +40.0%)

Refer to *Brake Sequence Using Torque Compensation on page 176* for more information.

■ S3-14: Torque Comp Fadeout Speed

No. (Hex.)	Name	Description	Default (Range)
S3-14 (069F) Expert	Torque Comp Fadeout Speed	V/f OLV CLV CLV/PM Sets the speed level for torque compensation to diminish during the time set in *S3-15 [Torque Comp Fadeout Time]*. This parameter is disabled when set to 0.0 Hz.	0.0 Hz (0.0 - 200.0 Hz)

■ S3-15: Torque Comp Fadeout Time

No. (Hex.)	Name	Description	Default (Range)
S3-15 (06A0) Expert	Torque Comp Fadeout Time	V/f OLV CLV CLV/PM Sets the time for torque compensation to decrease when the motor speed is at the level set in *S3-14 [Torque Comp Fadeout Speed]*.	1000 ms (0 - 5000 ms)

■ S3-16: Torque Limit Reduction Time@Stop

No. (Hex.)	Name	Description	Default (Range)
S3-16 (06A1)	Torque Limit Reduction Time@Stop	V/f OLV CLV CLV/PM Sets the time to decrease the torque limit rate after Position Lock at stop completes.	Determined by A1-02 (0 - 10000 ms)

After Position Lock at stop, the drive uses the rate of "Torque 300% / *S3-16*" to decrease the torque limit to 0.

■ S3-20: Dwell 2 Speed Reference

No. (Hex.)	Name	Description	Default (Range)
S3-20 (06A2) Expert	Dwell 2 Speed Reference	V/f OLV CLV CLV/PM Sets the speed reference for the Dwell 2 function.	0.00% (0.00 - 100.00%)

Dwell 2 function is enabled when *S3-20 ≠ 0.00%*.

When you enter an Up/Down command, the drive accelerates the operation speed to the speed reference set in this parameter at the selected acceleration ramp. When the speed is more than the value set in *S3-21 [Dwell 2 End Speed]*, the drive accelerates the operation speed at the selected acceleration ramp and jerk.

Note:

- If you set *S3-21 > S3-20*, the drive detects *oPE18 [Online Tuning Param Setting Err]*.
- When *S3-21 ≠ 0.00%*, the drive does not switch the acceleration ramps at the speed set in *C1-11 [Accel/Decel Ramp Switchover Spd]*.

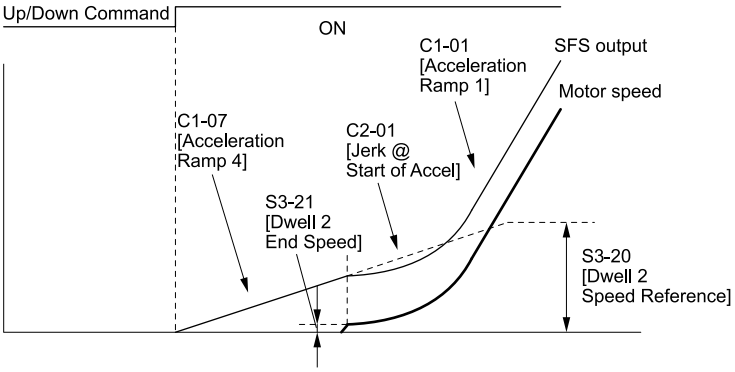

Figure 12.61 Dwell Speed Reference at Start

■ S3-21: Dwell 2 End Speed

No. (Hex.)	Name	Description	Default (Range)
S3-21 (06A5) Expert	Dwell 2 End Speed	V/f OLV CLV CLV/PM Sets the speed at which the drive ends the Dwell 2 function.	0.00% (0.00 - 100.00%)

Note:

When *S3-21 ≠ 0.00%*, the drive does not switch the acceleration ramps at the speed set in *C1-11 [Accel/Decel Ramp Switchover Spd]*.

■ S3-27: Load1 Torque Compensation Level

No. (Hex.)	Name	Description	Default (Range)
S3-27 (06BD)	Load1 Torque Compensation Level	V/f OLV CLV CLV/PM Sets the torque compensation value for load condition 1.	-50.0% (-100.0 - +100.0%)

Set the torque compensation value that is necessary to prevent the elevator car from moving when the brake is released with 0% load.

Figure 12.62 shows the Torque Compensation at Start settings with *S3-27* to *S3-30*.

The solid line in Figure 12.62 identifies the torque compensation at start when the elevator moves up or down.

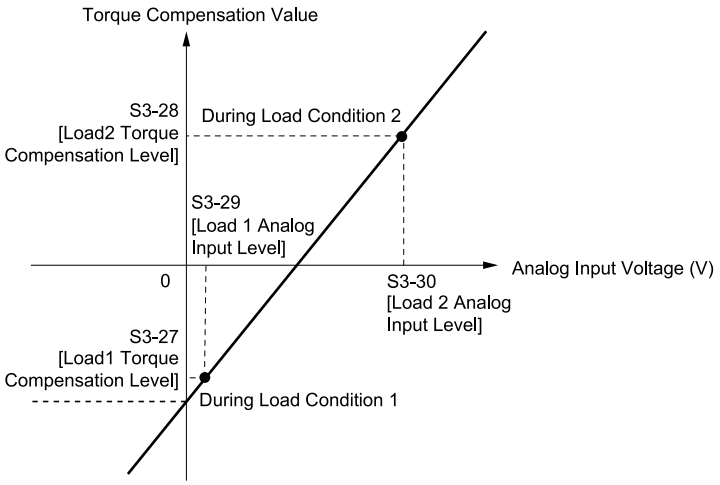

Figure 12.62 Torque Compensation at Start for the Elevator in Up and Down Direction

After setting load conditions 1 and 2, do a trial run. If necessary, you can set *S3-12 [Torque Comp. Bias in Down Direct]* to add a bias to the load sensor input when riding in a Down direction (default: 0.0%, same torque compensation characteristics in up and down direction). Figure 12.63 illustrates the effect of torque compensation on the settings of *S3-12* and *S3-27* to *S3-30*.

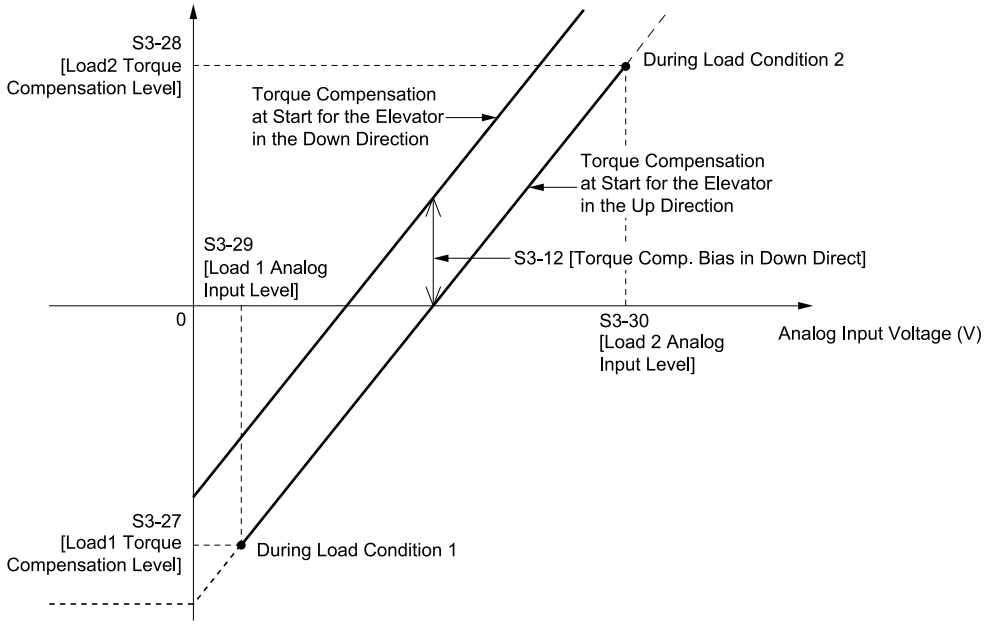

Figure 12.63 Torque Compensation at Start for the Elevator in Up and Down Direction

Refer to *Adjusting the Torque Compensation at Start on page 177* for more information.

■ S3-28: Load2 Torque Compensation Level

No. (Hex.)	Name	Description	Default (Range)
S3-28 (06BE)	Load2 Torque Compensation Level	V/f OLV CLV CLV/PM Sets the torque compensation value for load condition 2.	50.0% (-100.0 - +100.0%)

Set the torque compensation value that is necessary to prevent the elevator car from moving when the brake is released with a large load of 50% or more.

Refer to *Adjusting the Torque Compensation at Start on page 177* for more information.

■ S3-29: Load 1 Analog Input Level

No. (Hex.)	Name	Description	Default (Range)
S3-29 (06BF)	Load 1 Analog Input Level	V/f OLV CLV CLV/PM Sets the analog signal level from the load cell for load condition 1.	0.0% (-100.0 - +100.0%)

Set this parameter as a percentage of the analog input voltage from the load sensor with 0% load.
Refer to *Adjusting the Torque Compensation at Start on page 177* for more information.

■ S3-30: Load 2 Analog Input Level

No. (Hex.)	Name	Description	Default (Range)
S3-30 (06C0)	Load 2 Analog Input Level	V/f OLV CLV CLV/PM Sets the analog signal level from the load cell for load condition 2.	100.0% (-100.0 - +100.0%)

Set this parameter as a percentage of the analog input voltage from the load sensor with the load condition of *S3-28 [Load2 Torque Compensation Level]*.
Refer to *Adjusting the Torque Compensation at Start on page 177* for more information.

■ S3-34: Position Lock Torque Bias 1

No. (Hex.)	Name	Description	Default (Range)
S3-34 (06C4) Expert	Position Lock Torque Bias 1	V/f OLV CLV CLV/PM Sets a maximum value for the torque bias used for Anti-Rollback when the drive does Position Lock at start. Usually it is not necessary to change this setting.	0.0% (0.0 - 100.0%)

■ S3-35: Position Lock Torque Bias 2

No. (Hex.)	Name	Description	Default (Range)
S3-35 (06C5) Expert	Position Lock Torque Bias 2	V/f OLV CLV CLV/PM Sets an intermediate value for the torque bias used for Anti-Rollback when the drive does Position Lock at start. Usually it is not necessary to change this setting.	0.0% (0.0 - 100.0%)

■ S3-37: Torque Bias 1 Pos.Dev. Lvl

No. (Hex.)	Name	Description	Default (Range)
S3-37 (06C7) Expert	Torque Bias 1 Pos.Dev. Lvl	V/f OLV CLV CLV/PM Sets the position deviation level at which *S3-34 [Position Lock Torque Bias 1]* activates. Usually it is not necessary to change this setting.	0 ms (0 - 32767 ms)

■ S3-38: Torque Bias 2 Pos.Dev. Lvl

No. (Hex.)	Name	Description	Default (Range)
S3-38 (06C8) Expert	Torque Bias 2 Pos.Dev. Lvl	V/f OLV CLV CLV/PM Sets the position deviation level when the drive should switch from the Anti-Rollback torque bias set in *S3-34 [Position Lock Torque Bias 1]* to the torque bias set in *S3-35 [Position Lock Torque Bias 2]*. Usually it is not necessary to change this setting.	0 ms (0 - 32767 ms)

■ S3-39: Position Lock Integral Gain

No. (Hex.)	Name	Description	Default (Range)
S3-39 (06C9)	Position Lock Integral Gain	V/f OLV CLV CLV/PM Sets the drive responsiveness for Anti-Rollback during Position Lock at start. Usually it is not necessary to change this setting.	0.00 (-30.00 - +30.00)

If there is still too much deviation from the Position Lock start position after adjusted Position Lock gain 1 and gain 2, increase the value. If motor oscillation occurs during Position Lock, decrease the value.

■ S3-40: Position Lock Movement Detection

No. (Hex.)	Name	Description	Default (Range)
S3-40 (06CA) Expert	Position Lock Movement Detection	V/f OLV CLV CLV/PM Sets the amount of pulses for movement detection during Anti-Rollback.	1 (0 - 100)

■ S3-41: PosLock Gain2 Reduction Factor

No. (Hex.)	Name	Description	Default (Range)
S3-41 (06CB) Expert	PosLock Gain2 Reduction Factor	V/f OLV CLV CLV/PM Sets a reduction factor for the Anti-Rollback Gain set in *S3-02 [Position Lock Gain 2 at Start]*.	0.50 (0.00 - 1.00)

If the motor rotation (i.e., car movement) is below the movement detection level set in *S3-40 [Position Lock Movement Detection]*, the drive will reduce the Anti-Rollback gain as specified by the gain reduction level set in *S3-41*.

■ S3-52: ACR P Gain at Normal Run

No. (Hex.)	Name	Description	Default (Range)
S3-52 (1A9F) Expert	ACR P Gain at Normal Run	V/f OLV CLV CLV/PM Sets the proportional gain for the Automatic Current Regulator (ACR) at normal operation.	1000 (0 - 5000)

■ S3-53: ACR Integral Time at Normal Run

No. (Hex.)	Name	Description	Default (Range)
S3-53 (1AA0) Expert	ACR Integral Time at Normal Run	V/f OLV CLV CLV/PM Sets the integral time for Automatic Current Regulator at normal operation.	10.0 ms (0.0 - 100.0 ms)

■ S3-54: ACR P Gain at Start

No. (Hex.)	Name	Description	Default (Range)
S3-54 (1AA1) Expert	ACR P Gain at Start	V/f OLV CLV CLV/PM Sets the proportional gain for the Automatic Current Regulator at start.	1000 (0 - 5000)

The drive switches ACR proportional gain from the value set in *S3-52 [ACR P Gain at Normal Run]* to the value set in *S3-54* during *S1-04 [DC Inj/Pos Lock Time at Start]*.

■ S3-55: ACR Integral Time at Start

No. (Hex.)	Name	Description	Default (Range)
S3-55 (1AA2) Expert	ACR Integral Time at Start	V/f OLV CLV CLV/PM Sets the integral time for Automatic Current Regulator at start.	10.0 ms (0.0 - 100.0 ms)

The drive switches ACR integral time from the value set in *S3-53 [ACR Integral Time at Normal Run]* to the value set in *S3-55* during *S1-04 [DC Inj/Pos Lock Time at Start]*.

◆ S4: Rescue Operation

S4 parameters set Rescue Operation.

If power outage occurs, this function switches to a backup battery or Uninterruptable Power Supply (UPS) to travel the elevator to the nearest floor.

Refer to *Rescue Operation on page 183* for more information.

■ S4-01: Light Load Direction Search Sel

No. (Hex.)	Name	Description	Default (Range)
S4-01 (06A6)	Light Load Direction Search Sel	V/f OLV CLV CLV/PM Sets the function to enable and disable Light Load Direction Search.	0 (0 - 3)

0 : Disabled

1 : Enabled for Motor 1 and Motor 2

2 : Enabled for Motor 1 only

3 : Enabled - Advanced

Refer to *Light Load Direction Search Function on page 194* for more information.

■ S4-02: Light Load Search Method

No. (Hex.)	Name	Description	Default (Range)
S4-02 (06A7) Expert	Light Load Search Method	V/f OLV CLV CLV/PM Sets the method used to do Light Load Direction Search.	1 (0, 1)

0 : Output Current

1 : Regenerative Direction Detection

■ S4-03: Light Load Direction Search Time

No. (Hex.)	Name	Description	Default (Range)
S4-03 (06A8)	Light Load Direction Search Time	V/f OLV CLV CLV/PM Sets the time to do Light Load Direction Search.	1.0 s (0.0 - 5.0 s)

Refer to *Light Load Direction Search Function on page 194* for more information.

■ S4-04: Light Load Search Speed Ref.

No. (Hex.)	Name	Description	Default (Range)
S4-04 (06A9)	Light Load Search Speed Ref.	V/f OLV CLV CLV/PM Sets the speed reference to use during Light Load Direction Search.	Determined by A1-02 (0.00 - 20.00%)

Note:

The default setting changes when *A1-02 [Control Method Selection]* changes:
- When *A1-02 = 7 [CLV/PM]*, the default setting is 10.00%.
- When *A1-02 ≠ 7*, the default setting is 5.00%.

Refer to *Light Load Direction Search Function on page 194* for more information.

■ S4-05: Rescue Operation Torque Limit

No. (Hex.)	Name	Description	Default (Range)
S4-05 (06AA) Expert	Rescue Operation Torque Limit	V/f OLV CLV CLV/PM Sets the torque limit used during Rescue Operation.	100% (0 - 300%)

■ S4-06: Rescue Power Supply Selection

No. (Hex.)	Name	Description	Default (Range)
S4-06 (06CC) Expert	Rescue Power Supply Selection	V/f OLV CLV CLV/PM Sets the type of backup power supply the drive should use when it loses power.	0 (0 - 2)

0 : Battery

1 : Single Phase UPS

2 : Three Phase UPS

■ S4-07: UPS Power Rating

No. (Hex.)	Name	Description	Default (Range)
S4-07 (06CD) Expert	UPS Power Rating	V/f OLV CLV CLV/PM Sets the capacity of the UPS.	0.0 kVA (0.0 - 100.0 kVA)

■ S4-08: UPS Speed Limit Selection

No. (Hex.)	Name	Description	Default (Range)
S4-08 (06CE) Expert	UPS Speed Limit Selection	V/f OLV CLV CLV/PM Sets how a speed limit should be applied to the Rescue Operation speed set in *S4-15 [Rescue Speed Reference Selection]* when the drive uses a UPS to do Rescue Operation.	2 (0 - 2)

The drive calculates the appropriate speed limit based on the UPS capacity set in *S4-07 [UPS Power Rating]*. This speed limit helps prevent voltage saturation and motor stall during Rescue Operation.

Note:

This parameter is enabled only when *S4-06 = 1, 2 [Rescue Power Supply Selection = Single Phase UPS, Three Phase UPS]*.

0 : Disabled

1 : Enabled during Light Load Search

2 : Enabled

■ S4-12: DC Bus Voltage during Rescue

No. (Hex.)	Name	Description	Default (Range)
S4-12 (06D2) Expert	DC Bus Voltage during Rescue	V/f OLV CLV CLV/PM Sets the DC bus voltage during Rescue Operation.	0 V (0 - 1150 V)

■ S4-13: PowerSupply Reduction Lvl@Rescue

No. (Hex.)	Name	Description	Default (Range)
S4-13 (06D3) Expert	PowerSupply Reduction Lvl@Rescue	V/f OLV CLV CLV/PM Sets the level at which the drive detects a *PF5 [Rescue Power Supply Low Error]* fault.	80% (10 - 100%)

The drive detects *PF5* in these conditions:

- During Rescue Operation, DC bus voltage < "*S4-12 [DC Bus Voltage during Rescue]* × (*S4-13* - 10%)"
- 100 ms after the Rescue Operation has started, the DC bus voltage does not increase to the value of *S4-12* × *S4-13* before the motor starts

■ S4-15: Rescue Speed Reference Selection

No. (Hex.)	Name	Description	Default (Range)
S4-15 (06DA)	Rescue Speed Reference Selection	V/f OLV CLV CLV/PM Sets the speed reference used for Rescue Operation.	0 (0, 1)

0 : D1-25

The drive uses the value set in *d1-25 [Rescue Operation Speed]* as speed reference for Rescue Operation.

1 : Selected Speed

The drive uses the selected speed as speed reference for Rescue Operation according to the *d1-18 [Speed Reference Selection Mode]* setting.

- When *d1-18 = 0, 3 [Multi-speed Mode1 (d1-01 to 08), Multi-speed Mode2 (d1-02 to 08)]*, the drive uses the multi-step speed.
- When *d1-18 = 1, 2 [High speed has priority, Leveling speed has priority]*, the drive uses the speed set in these parameters:
  - *d1-19 [Nominal Speed]*
  - *d1-20 to d1-22 [Intermediate Speed 1 to Intermediate Speed 3]*
  - *d1-23 [Releveling Speed]*
  - *d1-26 [Leveling Speed]*

■ S4-20: Light Load Search Dir Override

No. (Hex.)	Name	Description	Default (Range)
S4-20 (1A9D) Expert	Light Load Search Dir Override	V/f OLV CLV CLV/PM Sets the evacuation in Light Load Direction determined by the drive.	1 (0, 1)

Note:
This parameter is enabled only when *S4-01 = 3 [Light Load Direction Search Sel = Enabled - Advanced]*.

0 : Disabled

The elevator controller decides direction by S1/S2.

1 : Enabled

The drive can override the S1/S2 direction of the elevator controller.

◆ S5: Elevator Functionality

S5 parameters set these functions:

- Short Floor Operation
- Direct Landing
- Brake Torque Check

■ Short Floor Function

Short Floor automatically adjusts to decrease the operation time at *d1-26 [Leveling Speed]* when the drive receives the command from an MFDI terminal set for *H1-xx = 53 [Leveling Speed]* before the motor speed reaches *d1-19 [Nominal Speed]*. This function is enabled when *S5-01 = 1 [Short Floor Operation Selection = Standard Short Floor]*. The drive calculates the distance to decelerate from *d1-19* to *d1-26* and automatically decreases the speed to *d1-26*.

Note:
This function is not available during Rescue Operation and Inspection Operation.

Area S in Figure 12.64 identifies the distance to a stop from *d1-19*.

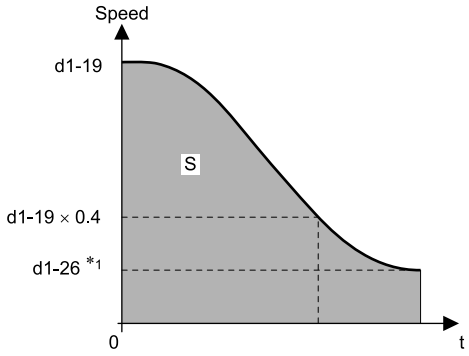

Figure 12.64 Speed During Normal Operation

*1 When *d1-18 = 0 or 3 [Speed Reference Selection Mode = Multi-speed Mode1 (d1-01 to 08) or Multi-speed Mode2 (d1-02 to 08)]*, the drive recognizes a speed reference lower than *d1-28 [Leveling Speed Detection Level]* as the leveling speed.

Short Floor has two operation patterns:

- When you set *d1-26* after the speed reaches 40% of *d1-19*, the drive keeps the speed for the time until the distance reaches area S.
- When you set *d1-26* before the speed reaches 40% of *d1-19*, the drive accelerates to 40% of *d1-19* and keeps the speed for the time until the distance reaches area S, then decelerates to *d1-26*.

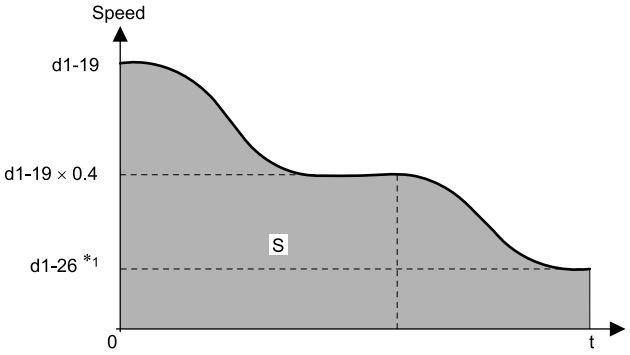

Figure 12.65 Short Floor Function

*1 When *d1-18 = 0 or 3 [Speed Reference Selection Mode = Multi-speed Mode1 (d1-01 to 08) or Multi-speed Mode2 (d1-02 to 08)]*, the drive recognizes a speed reference lower than *d1-28 [Leveling Speed Detection Level]* as the leveling speed.

Advanced Short Floor Function

Advanced Short Floor controls the operation time to arrive at a designated floor to a minimum. The drive calculates the optimal speed based on these values when it receives the command from an MFDI terminal set for *H1-xx = 53 [Leveling Speed]* to decrease the operation time at *d1-26 [Leveling Speed]*:

- The set speed reference
- The set acceleration and deceleration ramps
- *S5-03 [Short Floor Constant Speed Time]*

Note:

This function is not available during Rescue Operation and Inspection Operation.

Table 12.36 shows the operation examples of the Short Floor and Advance Short Floor functions.

Table 12.36 Short Floor Operation Examples

Leveling Speed Input Timing	Short Floor	Advanced Short Floor
Constant speed operation at rated speed (normal stop sequence)	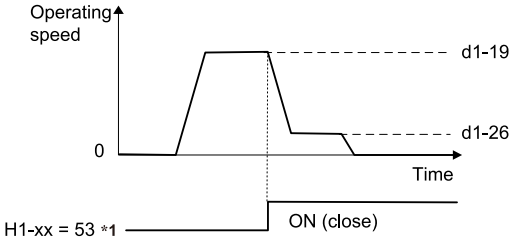	
During acceleration	(The speed is 40% of d1-19 or more.) 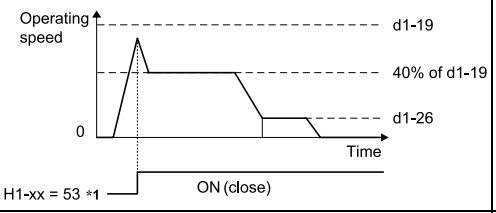	(The speed is over Optimal Speed.) 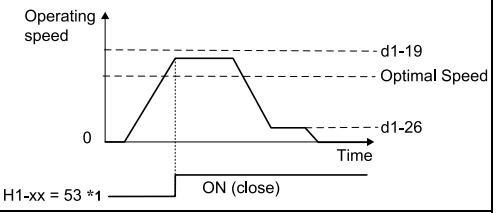
	(The speed is less than 40% of d1-19.) 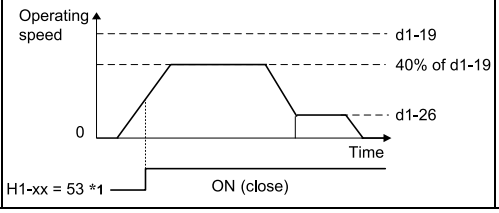	(The speed is optimal speed or less.) 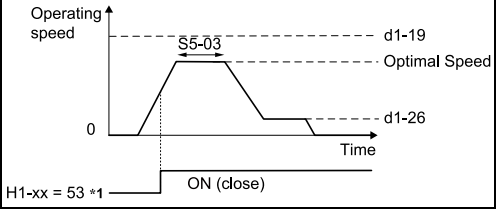

Leveling Speed Input Timing	Short Floor	Advanced Short Floor
Constant speed operation at less than the rated speed	(The speed is 40% of d1-19 or more.) 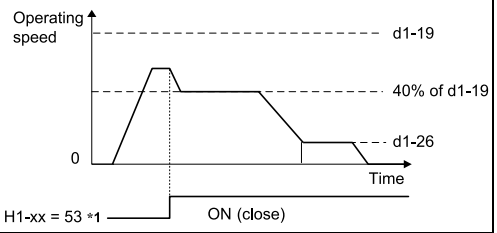 (The speed is less than 40% of d1-19.) 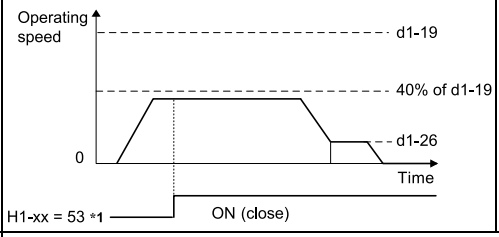 	Not available
Before start	Operates at the leveling speed.	

*1 When *d1-18 = 0 or 3 [Speed Reference Selection Mode = Multi-speed Mode1 (d1-01 to 08) or Multi-speed Mode2 (d1-02 to 08)]*, the drive recognizes a speed reference lower than *d1-28 [Leveling Speed Detection Level]* as the leveling speed.

■ Stop Distance Control

Stop Distance Control uses the acceleration/deceleration rate, jerk settings, and stopping distance to automatically calculate a speed sequence and arrive at the specified floor with increased accuracy. You can select three types of Stop Distance Control in *S5-10 [Leveling Stop Method Selection]*.

⚠ WARNING Sudden Movement Hazard

Make sure that all units and values set for *o1-20 [Sheave Diameter]*, *S5-11 [Deceleration Distance@High Speed]*, and *S5-12 [Up Stopping Distance]* are correct before you use Stop Distance Control.
Incorrect settings can cause serious injury or death from elevator car overrun.

Note:
You should use Stop Distance Control only for elevators with a constant stopping distance. Do not use Stop Distance Control in elevators where the stopping distance changes frequently.

These functions are disabled when you select Stop Distance Control:

- Switching between deceleration ramps
- *b7 [Droop Control]* parameters
- *S5-01 = 1, 2 [Short Floor Operation Selection = Standard Short Floor, Advance Short Floor]*

Stop Distance Control is disabled when you select any one of these functions:

- Analog speed reference
- Rescue Operation
- Inspection Operation
- During Motor 2 selection

Direct Landing

When *S5-10 = 1 [Direct Landing]*, the drive controls the distance from the start of deceleration to the stop and brings the elevator car to the specified floor without leveling speed.

The drive activates Direct Landing when the conditions listed in Table 12.37 are correct.

When the MFDI terminal set for *H1-xx = 5C [Stop Distance Correction]* activates during Direct Landing, the drive will switch the remaining distance to the stop distance set in *S5-12 [Up Stopping Distance]* for forward run (Up direction) or *S5-19 [Down Stopping Distance]* for reverse run (Down direction). Direct Landing will end when data from the encoder indicates that the stopping distance is 0.

Figure 12.66 shows a Direct Landing Operation example.

Table 12.37 Conditions for Direct Landing

d1-18 Setting [Speed Reference Selection Mode]	Direct Landing Start Conditions
d1-18 = 0, 3 *[Multi-speed Mode1 (d1-01 to 08), Multi-speed Mode2 (d1-02 to 08)]*	Speed reference ≥ *E1-04* × *S5-13* and the Up/Down command is not active or the speed reference is 0. *1
d1-18 = 1 *[High speed has priority]*	The Up/Down command is not active, the speed reference is 0, or the leveling speed reference has been selected by one of the MFDI terminals (*H1-xx*).
d1-18 = 2 *[Leveling speed has priority]*	

*1 If *U4-42 [Remaining Distance] > S5-18 [Digital Input 5C Accept Distance]*, or *S5-12 or S5-19 = 0* when the MFDI signal set for *H1-xx = 5C* activates, the drive ignores the signal input.

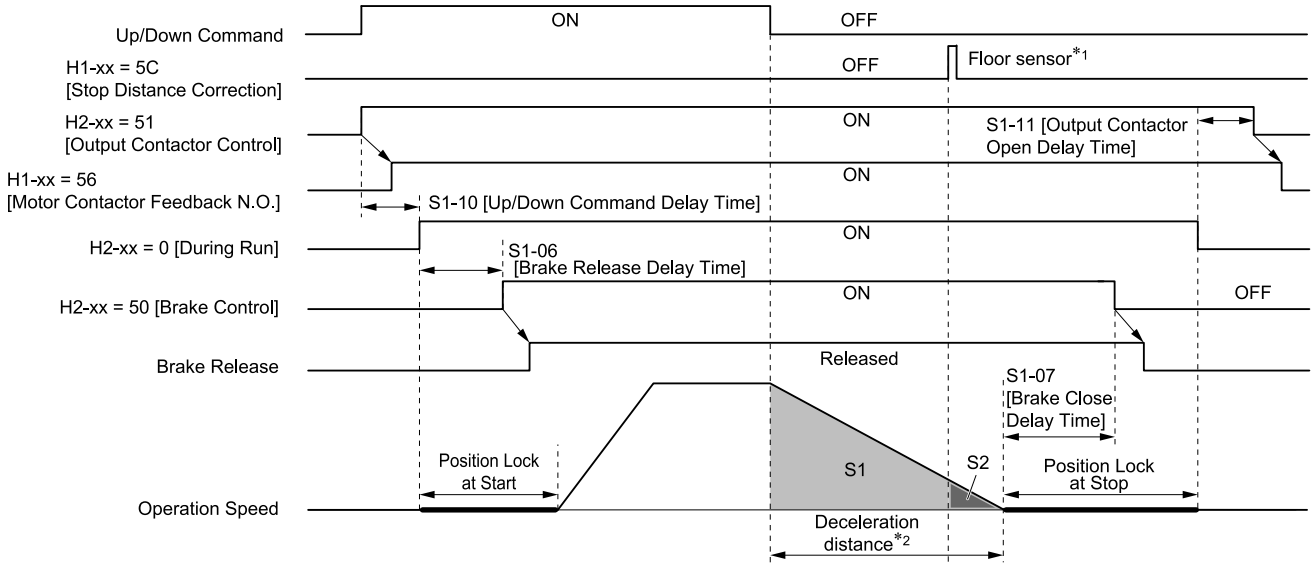

Figure 12.66 Operation Sequence Example for Direct Landing

*1 If *U4-42 > S5-18*, or *S5-12 or S5-19 = 0* when the MFDI signal set for *H1-xx = 5C* activates, the drive ignores the signal input.

*2 Area S1 is the deceleration distance (*S5-11*), which depends on motor speed from the start of deceleration to stop. Area S2 is the stopping distance (Up: *S5-12*, Down: *S5-19*) from the point at which the *Stop Distance Correction* signal is entered to when the car arrives at the specified floor.

Table 12.38 shows the conditions for Direct Landing and the deceleration distance for each speed level when *S5-10 = 1 or 3 [Direct Landing or Direct + Leveling]*.

Table 12.38 Direct Landing Conditions and Deceleration Distance for Each Speed Level

Speed Level	Deceleration Distance (S1)	Minimum Deceleration Distance (S2)	Conditions for Direct Landing
High	*S5-11*	*U4-43*	Motor speed (*U1-05*) > *S5-15* > *S5-17* ≥ *S5-13*
Middle	*S5-14*	*U4-47*	*S5-16* ≥ Motor speed (*U1-05*) ≥ *S5-13*
Low	*S5-15*	*U4-48*	*S5-17* ≥ Motor speed (*U1-05*) ≥ *S5-13*
-	Normal operation	Normal operation	Motor speed (*U1-05*) < *S5-13*

When you manually change the parameters shown in Table 12.39, the drive automatically changes the settings of *S5-11 [Deceleration Distance@High Speed]*, *S5-14 [Decel Distance @ Mid Speed]*, and *S5-15 [Decel Distance @ Low Speed]*.

Table 12.39 Automatic Setting Change for S5-11, S5-14, and S5-15

Manually Changed Parameters	Change of Settings
E1-04 [Maximum Output Frequency]	The drive automatically sets *S5-11 = U4-43 [Min.Dec.Distance (H)]*. *U4-43* shows the minimum deceleration distance when the drive decelerates to stop from the speed of *E1-04*.
S5-16 [Direct Landing Mid Speed Level]	The drive automatically sets *S5-14 = U4-47 [Min.Dec.Distance (M)]*. *U4-47* shows the minimum deceleration distance when the drive decelerates to stop from the speed of *S5-16*. The actual Direct Landing Start Speed Level for Middle Speed will also be *S5-16*.
S5-17 [Direct Landing Low Speed Level]	The drive automatically sets *S5-15 = U4-48 [Min.Dec.Distance (L)]*. *U4-48* shows the minimum deceleration distance when the drive decelerates to stop from the speed of *S5-17*. The actual Direct Landing Start Speed Level for Low Speed will also be *S5-17*.

When you use a high speed elevator, the value of *U4-43* can be more than the floor height. Use *S5-14 to S5-17* to stop the elevator at the target floor even if the deceleration distance is more than one floor. You can set three

deceleration distances depending on the speed at which distance control starts. Table 12.40 shows the relationship between the Direct Landing Start Speed Levels and deceleration distances.

Table 12.40 Switching Pattern of Deceleration Distances

Speed Level	Deceleration Distance	Direct Landing Start Speed Level Pattern
High	*S5-11*	100% (*E1-04*) ≥ Direct Landing Start Speed ≥ *S5-13* ≥ (*S5-16* = *S5-17* = 0)
	S5-11	100% (*E1-04*) ≥ Direct Landing Start Speed > *S5-16* > *S5-17* ≥ *S5-13*
	S5-11	100% (*E1-04*) ≥ Direct Landing Start Speed > *S5-16* ≥ *S5-13* > *S5-17*
	S5-11	100% (*E1-04*) ≥ Direct Landing Start Speed ≥ *S5-13* > *S5-16* > *S5-17*
Middle	*S5-14*	*E1-04* ≥ *S5-16* ≥ Direct Landing Start Speed > *S5-17* ≥ *S5-13*
	S5-14	*E1-04* ≥ *S5-16* ≥ Direct Landing Start Speed ≥ *S5-13* > *S5-17*
Low	*S5-15*	*E1-04* ≥ *S5-16* > *S5-17* ≥ Direct Landing Start Speed ≥ *S5-13*
Normal deceleration	-	*S5-13* > Direct Landing Start Speed

Leveling Distance Control

When *S5-10 = 2 [LevelingDistCtrl]*, Leveling Distance Control uses the leveling speed reference for the remaining distance to arrive at the specified floor.

The drive activates Leveling Distance Control when the conditions listed in Table 12.41 are correct.

Figure 12.67 shows a Leveling Distance Control Operation example.

Table 12.41 Conditions for Leveling Distance Control

d1-18 Setting [Speed Reference Selection Mode]	MFDI Terminal Settings	Leveling Distance Control Start Conditions
d1-18 = 0, 3 *[Multi-speed Mode1 (d1-01 to 08), Multi-speed Mode2 (d1-02 to 08)]*	-	The Up/Down command is not active or the speed reference is 0.
d1-18 = 1 *[High speed has priority]*	Leveling speed reference is selected (*H1-xx = 53 [Leveling Speed]*).	The Up/Down command is not active, or all input terminals set for *H1-xx = 50 to 53* are open.
	Leveling speed reference is not selected (*H1-xx ≠ 53*).	Up/Down command is not active.
d1-18 = 2 *[Leveling speed has priority]*	Nominal speed reference is selected (*H1-xx = 50 [Nominal Speed]*).	The Up/Down command is not active, or all input terminals set for *H1-xx = 50 to 53* are open.
	Nominal speed reference is not selected (*H1-xx ≠ 50*).	Up/Down command is not active.

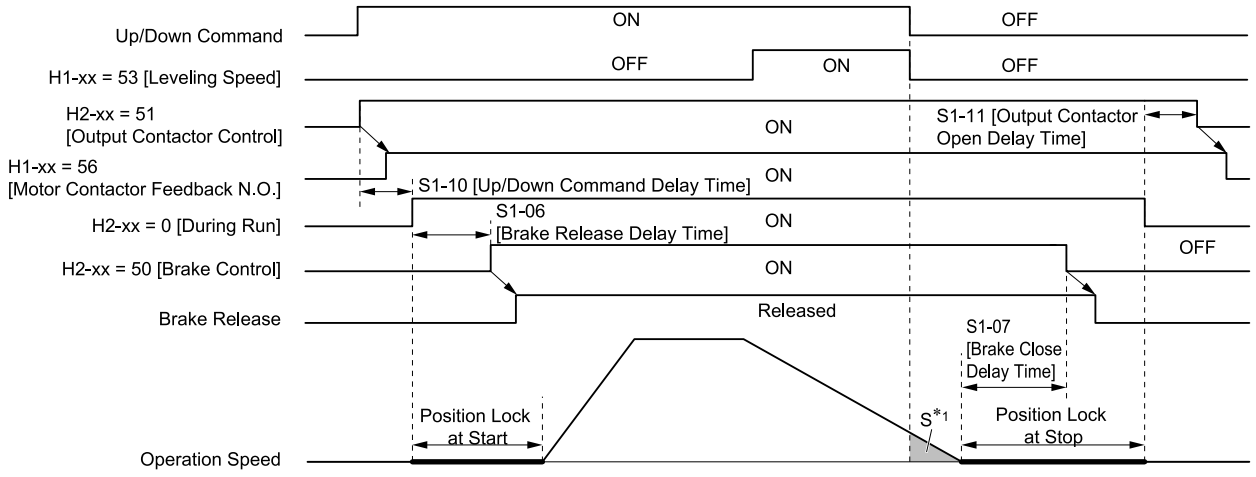

Figure 12.67 Operation Sequence Example for Leveling Distance Control

*1 Area S is the stopping distance (*S5-12*) from the point at which leveling operation is complete to when the car arrives at the specified floor.

Combination of Direct Landing and Leveling Distance Control

When *S5-10 = 3 [Direct + Leveling]*, the drive switches the operation from Direct Landing to constant speed operation at a specified speed, then it uses a specified deceleration distance or Stop command to decelerate to stop.

Figure 12.68 shows the Combination of Direct Landing and Leveling Distance Control Operation example.

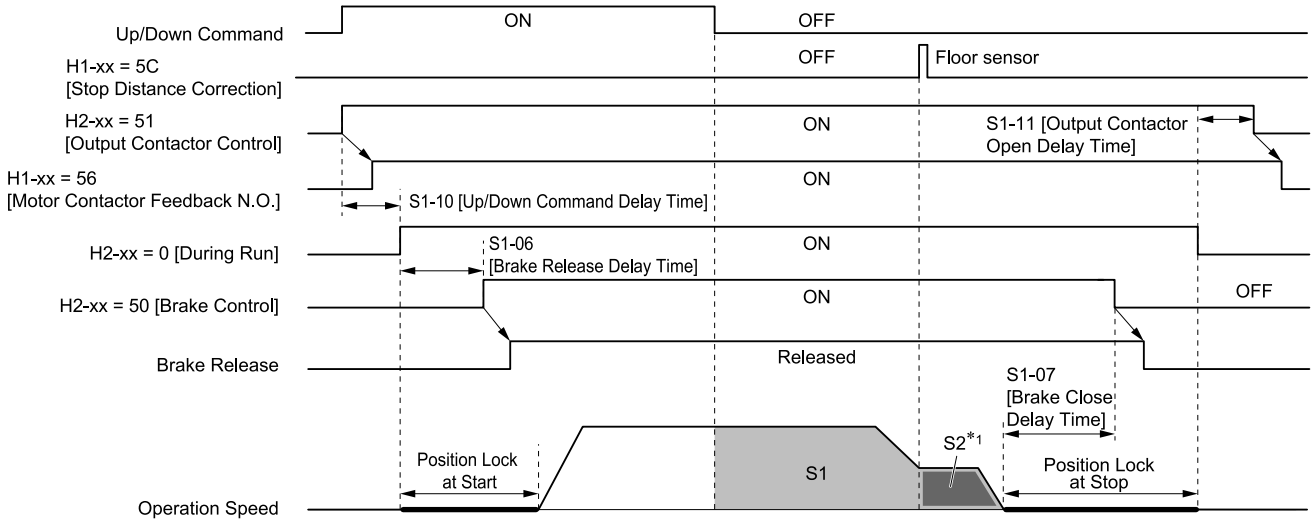

Figure 12.68 Operation Sequence Example for Combination of Direct Landing and Leveling Distance Control

*1 The drive decelerates to stop so that Area S2 becomes the value set in *S5-25 [Creep Distance]*. When the speed reference becomes 0% or when the MFDI signal set for *H1-xx = 30 [Creep Cancel]* (N.C.) deactivates, the drive cancels the creep operation and decelerates to stop.

The drive starts Direct Landing when the value of *U1-16 [SFS Output Speed]* satisfies both of these conditions:

- *U1-16 ≥ S5-13 [Direct Landing Minimum Spd Level]*
- *0 < U1-16 ≤ S5-24 [Creep Start Speed]*

When the speed is at *S5-24* or lower, the drive operates at the speed set in *d1-xx [Speed Reference]*.

- **When the drive uses *S5-25* for deceleration from creep speed**
  The drive decelerates from the creep speed and stops so that the deceleration distance becomes *S5-25*. Jerk characteristics are disabled in this case.

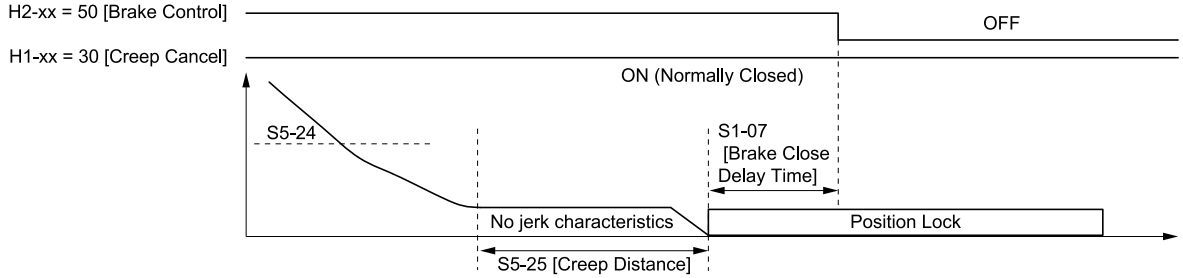

- **When the drive does not use *S5-25* for deceleration from creep speed**

When the speed reference becomes 0% or the MFDI signal set for *H1-xx = 30* (N.C.) deactivates during operation at the creep speed, the drive cancels creep operation and decelerates to stop. The drive uses *C1-02 [Deceleration Ramp 1]* for deceleration ramp, and uses *C2-03 [Jerk @ Start of Decel]* and *C2-04 [Jerk @ End of Decel]* for jerk characteristics in this case.

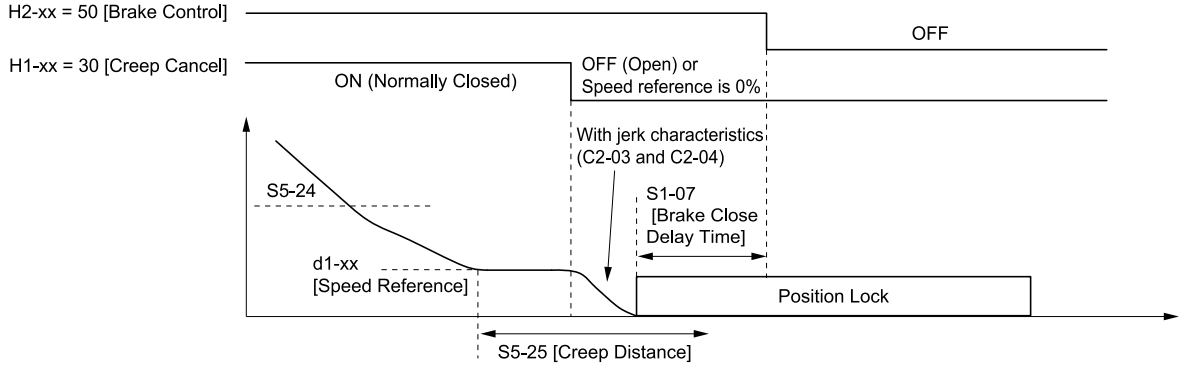

Note:
- When the drive operation switches from Direct Landing to Leveling Distance Control, *U1-01 [Speed Reference]* shows the speed reference value at that time.
- When *S5-10 = 3*, the drive ignores the MFDI signal set for *H1-xx = 5C [Stop Distance Correction]*.
- When you change the speed reference and the conditions for distance control are satisfied, the speed reference at the start of distance control is enabled. When you try to change the speed reference again, the drive does not accept the change until it stops the operation.

■ S5-01: Short Floor Operation Selection

No. (Hex.)	Name	Description	Default (Range)
S5-01 (06AB)	Short Floor Operation Selection	V/f OLV CLV CLV/PM Sets the function to enable and disable the Short Floor function.	0 (0 - 2)

Note:
- The Short Floor and Advanced Short Floor functions are not available during Rescue Operation and Inspection Operation.
- You must not use Short Floor or Advanced Short Floor when you configure the analog input terminals to supply the speed reference.
- When *d1-18 = 0 or 3 [Speed Reference Selection Mode = Multi-speed Mode1 (d1-01 to 08) or Multi-speed Mode2 (d1-02 to 08)]*, and when the MFDI terminal set for *H1-xx = 53 [Leveling Speed]* deactivates during Short Floor or Advanced Short Floor, the drive will accelerate or decelerate to the specified speed reference at the specified acceleration or deceleration rate.

0 : Disabled

1 : Standard Short Floor

2 : Advance Short Floor

■ S5-02: Short Floor Nominal Speed

No. (Hex.)	Name	Description	Default (Range)
S5-02 (06AC)	Short Floor Nominal Speed	V/f OLV CLV CLV/PM Sets the nominal speed used to calculate the distance for the Short Floor function when *d1-18 = 0 or 3 [Speed Reference Selection Mode = Multi-speed Mode1 (d1-01 to 08) or Multi-speed Mode2 (d1-02 to 08)]*.	0.0% (0.0 - 100.0%)

■ S5-03: Short Floor Constant Speed Time

No. (Hex.)	Name	Description	Default (Range)
S5-03 (06AD) Expert	Short Floor Constant Speed Time	V/f OLV CLV CLV/PM Sets the minimum time of the constant speed operation when *S5-01 = 2 [Short Floor Operation Selection = Advance Short Floor]*.	0.0 s (0.0 - 2.0 s)

■ S5-04: Distance Calc Acc Time Gain

No. (Hex.)	Name	Description	Default (Range)
S5-04 (06AE) Expert	Distance Calc Acc Time Gain	V/f OLV CLV CLV/PM Sets the gain used to adjust the jerk at acceleration for an optimum speed calculation when *S5-01 = 2 [Short Floor Operation Selection = Advance Short Floor]*.	150.0% (50.0 - 200.0%)

- If the leveling time is too short or if the optimum speed calculated by the drive is too fast, increase the setting value of *S5-04* and *S5-05 [Distance Calc Dec Time Gain]*.
- If the leveling time is too long or if the optimum speed calculated by the drive is too slow, decrease the setting value of *S5-04* and *S5-05*.

Note:

If the setting value is too low, faster optimum speeds and shortened leveling times can trigger an overrun. Do not set this gain lower than 100%.

■ S5-05: Distance Calc Dec Time Gain

No. (Hex.)	Name	Description	Default (Range)
S5-05 (06AF) Expert	Distance Calc Dec Time Gain	V/f OLV CLV CLV/PM Sets the gain used to adjust the jerk at deceleration for an optimum speed calculation when *S5-01 = 2 [Short Floor Operation Selection = Advance Short Floor]*.	150.0% (50.0 - 200.0%)

- If the leveling time is too short or if the optimum speed calculated by the drive is too fast, increase the setting value of *S5-04 [Distance Calc Acc Time Gain]* and *S5-05*.
- If the leveling time is too long or if the optimum speed calculated by the drive is too slow, decrease the setting value of *S5-04* and *S5-05*.

Note:

If the setting value is too low, faster optimum speeds and shortened leveling times can trigger an overrun. Do not set this gain lower than 100%.

■ S5-10: Leveling Stop Method Selection

No. (Hex.)	Name	Description	Default (Range)
S5-10 (06B0) Expert	Leveling Stop Method Selection	V/f OLV CLV CLV/PM Sets the stopping method.	0 (0 - 3)

0 : Speed Control

1 : Direct Landing

When the distance from the deceleration start point of the elevator to the landing point is constant, the drive can directly stop the elevator at the target floor without the leveling time.

2 : LevelingDistCtrl

When the distance from the elevator stop signal input point to the landing point is constant, the drive can do distance control from the stop signal input point to the landing point.

3 : Direct + Leveling

The drive uses the combination of Direction Landing and Leveling Distance Control. In this method, the drive can compensate the deviation of stop position caused by the slip of elevator ropes.

Refer to *Stop Distance Control on page 698* for more information.

■ S5-11: Deceleration Distance@High Speed

No. (Hex.)	Name	Description	Default (Range)
S5-11 (06B1) Expert	Deceleration Distance@High Speed	V/f OLV CLV CLV/PM Sets the deceleration distance when Stop Distance Control is enabled.	0 mm (0 - 32767 mm)

Note:
- Parameter *o1-12 [Length Units]* sets the units for this parameter. When *o1-12 = 1 [Inch Units]*, the default setting is 0.00 in, and the setting range is 0.00 in to 655.00 in.
- Set a value larger than *U4-43 [Min.Dec.Distance (H)]* to this parameter. If you set *S5-11 < U4-43*, the drive detects *oPE21 [Elevator Parameter Setting Fault]*.

Refer to *Stop Distance Control on page 698* for more information.

■ S5-12: Up Stopping Distance

No. (Hex.)	Name	Description	Default (Range)
S5-12 (06B2) RUN Expert	Up Stopping Distance	V/f OLV CLV CLV/PM Sets the stopping distance when the motor operates the elevator in the up direction and when Stop Distance Control is enabled.	150 mm (0 - 10000 mm)

Note:
- Parameter *o1-12 [Length Units]* sets the units for this parameter. When *o1-12 = 1 [Inch Units]*, the default setting is 5.91 in, and the setting range is 0.00 in to 393.00 in.
- Set a value larger than *U4-44 [Min.Stop Distance]* to this parameter. If you set *S5-12 < U4-44*, the drive detects *oPE21 [Elevator Parameter Setting Fault]*.

Refer to *Stop Distance Control on page 698* for more information.

■ S5-13: Direct Landing Minimum Spd Level

No. (Hex.)	Name	Description	Default (Range)
S5-13 (06D6) Expert	Direct Landing Minimum Spd Level	V/f OLV CLV CLV/PM Sets the speed level for the start of Direct Landing as a percentage of *E1-04 [Maximum Output Frequency]*.	8.00% (0.00 - 100.00%)

Direct Landing is disabled when the starting speed for Direct Landing is the value of *E1-04* × *S5-13* or less.

Note:
- Parameter *o1-03 [Speed Display Unit Selection]* sets the units for this parameter.
- When *S5-10 = 3 [Direct + Leveling]*, if you set *S5-13* ≤ *S5-24 [Creep Start Speed]*, the drive detects *oPE21 [Elevator Parameter Setting Fault]*.

Refer to *Stop Distance Control on page 698* for more information.

■ S5-14: Decel Distance @ Mid Speed

No. (Hex.)	Name	Description	Default (Range)
S5-14 (06EF) Expert	Decel Distance @ Mid Speed	V/f OLV CLV CLV/PM Sets the deceleration distance when the speed is *S5-16 [Direct Landing Mid Speed Level]* or lower.	0 mm (0 - 32767 mm)

Note:
- Parameter *o1-12 [Length Units]* sets the units for this parameter. When *o1-12 = 1 [Inch Units]*, the default setting is 0.00 in, and the setting range is 0.00 in to 655.00 in.
- Set a value larger than *U4-47 [Min.Dec.Distance (M)]* to this parameter. If you set *S5-14 < U4-47*, the drive detects *oPE21 [Elevator Parameter Setting Fault]*.

Refer to *Stop Distance Control on page 698* for more information.

■ S5-15: Decel Distance @ Low Speed

No. (Hex.)	Name	Description	Default (Range)
S5-15 (06D8) Expert	Decel Distance @ Low Speed	V/f OLV CLV CLV/PM Sets the deceleration distance when the speed is *S5-17 [Direct Landing Low Speed Level]* or lower.	0 mm (0 - 32767 mm)

Note:
- Parameter *o1-12 [Length Units]* sets the units for this parameter. When *o1-12 = 1 [Inch Units]*, the default setting is 0.00 in, and the setting range is 0.00 in to 655.00 in.
- Set a value larger than *U4-48 [Min.Dec.Distance (L)]* to this parameter. If you set *S5-15 < U4-48*, the drive detects *oPE21 [Elevator Parameter Setting Fault]*.

Refer to *Stop Distance Control on page 698* for more information.

■ S5-16: Direct Landing Mid Speed Level

No. (Hex.)	Name	Description	Default (Range)
S5-16 (06D9) Expert	Direct Landing Mid Speed Level	V/f OLV CLV CLV/PM Sets the middle speed level for the start of Direct Landing as a percentage of *E1-04 [Maximum Output Frequency]*.	0.00% (0.00 - 100.00%)

When the Direct Landing start speed is *S5-16* or less, the deceleration distance is *S5-14 [Decel Distance @ Mid Speed]*.

When the setting value is less than *S5-13 [Direct Landing Minimum Spd Level]*, Direct Landing is disabled.

Note:
- Parameter *o1-03 [Speed Display Unit Selection]* sets the units for this parameter.
- If you set *S5-16 ≥ S5-17 [Direct Landing Low Speed Level]* and when *S5-17 ≠ 0.00%*, the drive detects *oPE21 [Elevator Parameter Setting Fault]*.

Refer to *Stop Distance Control on page 698* for more information.

■ S5-17: Direct Landing Low Speed Level

No. (Hex.)	Name	Description	Default (Range)
S5-17 (06DB) Expert	Direct Landing Low Speed Level	V/f OLV CLV CLV/PM Sets the low speed level for the start of Direct Landing as a percentage of *E1-04 [Maximum Output Frequency]*.	0.00% (0.00 - 100.00%)

When the direct landing start speed is *S5-17* or less, the deceleration distance is *S5-15 [Decel Distance @ Low Speed]*.

When the setting value is less than *S5-13 [Direct Landing Minimum Spd Level]*, Direct Landing is disabled.

Note:
- Parameter *o1-03 [Speed Display Unit Selection]* sets the units for this parameter.
- If you set *S5-17 ≤ S5-16 [Direct Landing Mid Speed Level]* and when *S5-17 ≠ 0.00%*, the drive detects *oPE21 [Elevator Parameter Setting Fault]*.

Refer to *Stop Distance Control on page 698* for more information.

■ S5-18: Digital Input 5C Accept Distance

No. (Hex.)	Name	Description	Default (Range)
S5-18 (06DC) Expert	Digital Input 5C Accept Distance	V/f OLV CLV CLV/PM Set the remaining distance at which the signal from an MFDI terminal set for *H1-xx = 5C [Stop Distance Correction]* is applicable.	500 mm (0 - 32767 mm)

When the drive receives the signal of *H1-xx = 5C*, the signal is applicable when *U4-42 [Remaining Distance]* ≤ *S5-18*, and the signal is inapplicable when *U4-42* > *S5-18*.

Note:

Parameter *o1-12 [Length Units]* sets the units for this parameter. When *o1-12 = 1 [Inch Units]*, the default setting is 19.69 in, and the setting range is 0.00 in to 655.00 in.

Refer to *Stop Distance Control on page 698* for more information.

■ S5-19: Down Stopping Distance

No. (Hex.)	Name	Description	Default (Range)
S5-19 (06DD) RUN Expert	Down Stopping Distance	V/f OLV CLV CLV/PM Sets the stopping distance when the motor operates the elevator in the down direction and when Stop Distance Control is enabled.	150 mm (0 - 10000 mm)

Note:

- Parameter *o1-12 [Length Units]* sets the units for this parameter. When *o1-12 = 1 [Inch Units]*, the default setting is 5.91 in, and the setting range is 0.00 in to 393.00 in.
- Set a value larger than *U4-44 [Min.Stop Distance]* to this parameter. If you set *S5-19* < *U4-44*, the drive detects *oPE21 [Elevator Parameter Setting Fault]*.

Refer to *Stop Distance Control on page 698* for more information.

■ S5-20: Feed Forward P Gain @Direct-Land

No. (Hex.)	Name	Description	Default (Range)
S5-20 (06DE) Expert	Feed Forward P Gain @Direct-Land	V/f OLV CLV CLV/PM Sets the proportional gain of feed forward control to be switched during distance control.	1.00 (0.01 - 100.00)

After the time set in *S5-21 [Feed Forward Gain Switching Time]* passes from the start of deceleration in distance control, the drive switches the proportional gain of feed forward control from *n5-03 [Feed Forward Control Gain]* to *S5-20*.

■ S5-21: Feed Forward Gain Switching Time

No. (Hex.)	Name	Description	Default (Range)
S5-21 (06DF) Expert	Feed Forward Gain Switching Time	V/f OLV CLV CLV/PM Sets the time to switch the feed forward control gain from *n5-03 [Feed Forward Control Gain]* to *S5-20 [Feed Forward P Gain @Direct-Land]*.	0.100 s (0.001 - 10.000 s)

■ S5-24: Creep Start Speed

No. (Hex.)	Name	Description	Default (Range)
S5-24 (06E3) Expert	Creep Start Speed	V/f OLV CLV CLV/PM Sets the speed at which creep movement starts when *S5-10 = 3 [Leveling Stop Method Selection = Direct + Leveling]*.	1.20% (0.00 - 100.00%)

Note:

- Parameter *o1-03 [Speed Display Unit Selection]* sets the units for this parameter.
- When *S5-10 = 3 [Direct + Leveling]*, if you set *S5-24* ≥ *S5-13 [Direct Landing Minimum Spd Level]*, the drive detects *oPE21 [Elevator Parameter Setting Fault]*.

Refer to *Stop Distance Control on page 698* for more information.

■ S5-25: Creep Distance

No. (Hex.)	Name	Description	Default (Range)
S5-25 (06E4) Expert	Creep Distance	V/f OLV CLV CLV/PM Sets the distance from creep speed to stop.	500 mm (0 - 10000 mm)

Note:
Parameter *o1-12 [Length Units]* sets the units for this parameter. When *o1-12 = 1 [Inch Units]*, the default setting is 19.69 in, and the setting range is 0.00 in to 393.00 in.

Refer to *Stop Distance Control on page 698* for more information.

■ S5-26: Adjuster for Dec Distance

No. (Hex.)	Name	Description	Default (Range)
S5-26 (06E5) Expert	Adjuster for Dec Distance	V/f OLV CLV CLV/PM Sets the value to decrease the deceleration distance in Direct Landing when *S5-10 = 3 [Leveling Stop Method Selection = Direct + Leveling]*.	0 mm (-500 - +500 mm)

The drive adds the value of this parameter to the deceleration distance set in *S5-11 [Deceleration Distance@High Speed]*, *S5-14 [Decel Distance @ Mid Speed]*, or *S5-15 [Decel Distance @ Low Speed]* and uses the value as the final deceleration distance.

Note:
Parameter *o1-12 [Length Units]* sets the units for this parameter. When *o1-12 = 1 [Inch Units]*, the default setting is 0.00 in, and the setting range is -19.69 in to +19.69 in.

■ S5-30: Brake Torque Check Speed

No. (Hex.)	Name	Description	Default (Range)
S5-30 (06E9) Expert	Brake Torque Check Speed	V/f OLV CLV CLV/PM Sets the speed reference for brake torque check as a percentage of *E1-04 [Maximum Output Frequency]*.	3.0% (0.0 - 20.0%)

Refer to *Brake Torque Check Function on page 179* for more information.

■ S5-31: Car Movement @ Brake T Check

No. (Hex.)	Name	Description	Default (Range)
S5-31 (06EA)	Car Movement @ Brake T Check	V/f OLV CLV CLV/PM Sets the allowable amount of car movement during the brake torque check.	60 mm (0 - 100 mm)

Note:
Parameter *o1-12 [Length Units]* sets the units for this parameter. When *o1-12 = 1 [Inch Units]*, the default setting is 2.36 in, and the setting range is 0.00 in to 3.93 in.

Refer to *Brake Torque Check Function on page 179* for more information.

■ S5-32: Applying Motor Torque During BTC

No. (Hex.)	Name	Description	Default (Range)
S5-32 (06EB)	Applying Motor Torque During BTC	V/f OLV CLV CLV/PM Sets the amount of torque applied during the brake torque check as a percentage of the motor rated torque.	100% (50 - 200%)

Note:
If you set a value larger than the torque limit of the drive, the drive detects *oPE21 [Elevator Parameter Setting Fault]*.

Refer to *Brake Torque Check Function on page 179* for more information.

■ S5-33: Motor Torque Ramp Up Time

No. (Hex.)	Name	Description	Default (Range)
S5-33 (06EC)	Motor Torque Ramp Up Time	V/f OLV CLV CLV/PM Sets the ramp up time to increase the motor torque to the value set in *S5-32 [Applying Motor Torque During BTC]* during the brake torque check.	0.5 s (0.0 - 3.0 s)

Refer to *Brake Torque Check Function on page 179* for more information.

■ S5-34: Motor Torque Ramp Down Time

No. (Hex.)	Name	Description	Default (Range)
S5-34 (06ED)	Motor Torque Ramp Down Time	V/f OLV CLV CLV/PM Sets the ramp down time to decrease the motor torque from the value set in *S5-32 [Applying Motor Torque During BTC]* to 0% during the brake torque check.	0.5 s (0.0 - 3.0 s)

Refer to *Brake Torque Check Function on page 179* for more information.

■ S5-35: Brake Torque Check Run Time

No. (Hex.)	Name	Description	Default (Range)
S5-35 (06EE)	Brake Torque Check Run Time	V/f OLV CLV CLV/PM Sets the time to operate the drive at the motor torque value set in *S5-32 [Applying Motor Torque During BTC]* during the brake torque check.	3.0 s (0.0 - 10.0 s)

Refer to *Brake Torque Check Function on page 179* for more information.

◆ S6: Elevator Error Detection

S6 parameters set these faults/alarms detection functions:

- *SE1 [Motor Contactor Response Error]* to *SE4 [Brake Response Error]*
- Overacceleration
- Speed Reference Loss

■ S6-01: Mtr Contact Error(SE1) Reset Sel

No. (Hex.)	Name	Description	Default (Range)
S6-01 (06B3)	Mtr Contact Error(SE1) Reset Sel	V/f OLV CLV CLV/PM Sets when the drive should detect *SE1 [Motor Contactor Response Error]* and the condition of fault reset.	0 (0 - 2)

After you set the contactor control output, if there is no response from the motor contactor in the time set in *S1-10 [Up/Down Command Delay Time]*, the drive detects *SE1*.

0 : Manual Reset at Stop

You can manually reset *SE1* when the drive is stopped.

1 : Auto Reset at Stop

The drive automatically resets *SE1* when the drive is stopped.

2 : No SE1 Detection

The drive never detects *SE1*.

■ S6-02: Start I Error(SE2) Detect DelayT

No. (Hex.)	Name	Description	Default (Range)
S6-02 (06B4)	Start I Error(SE2) Detect DelayT	V/f OLV CLV CLV/PM Sets the delay time for *SE2 [Starting Current Error]* detection.	200 ms (0 - 10000 ms)

After the drive received the Up/Down command and the times of *S1-06 [Brake Release Delay Time]* + *S6-02 [Start I Error(SE2) Detect DelayT]* have passed, if the drive output current is less than 25%, the drive detects *SE2*.

■ S6-03: Start I Error(SE2) Detect Level

No. (Hex.)	Name	Description	Default (Range)
S6-03 (06B5)	Start I Error(SE2) Detect Level	V/f OLV CLV CLV/PM Sets the level of current applied to the motor when the Brake Control command is activated, as a percentage of *E2-03 [Motor No-Load Current]*.	25% (0 - 100%)

After the drive received the Up/Down command and the times of *S1-06 [Brake Release Delay Time] + S6-02 [Start I Error(SE2) Detect DelayT]* have passed, if the drive output current is less than the value set in *S6-03*, the drive detects *SE2 [Starting Current Error]*.

■ S6-04: Mtr I Error (SE3) Detect DelayT

No. (Hex.)	Name	Description	Default (Range)
S6-04 (06B6)	Mtr I Error (SE3) Detect DelayT	V/f OLV CLV CLV/PM Sets a delay time for *SE3 [Output Current Error]* detection.	200 ms (0 - 5000 ms)

If the drive output current is less than 25% for the time set in *S6-04*, the drive detects *SE3*.

■ S6-05: BrakeSet Error(SE4) DetectDelayT

No. (Hex.)	Name	Description	Default (Range)
S6-05 (06B7)	BrakeSet Error(SE4) DetectDelayT	V/f OLV CLV CLV/PM Sets a delay time for *SE4 [Brake Response Error]* detection.	500 ms (0 - 10000 ms)

If an MFDO terminal set for *H2-xx = 50 [Brake Control]* and an MFDI terminal set for *H1-xx = 79 [Brake Feedback N.O.]* or *H1-xx = 5B [Brake Feedback N.C.]* do not align for the time set in *S6-05*, the drive detects *SE4*.

When *S6-07 = 0 [Brake Response Monitor Function = Disabled]*, if one of these conditions continues for the time set in *S6-05*, the drive detects *SE4*:

- The state of the signals (release/close) of the MFDO terminal set for *H2-xx = 50* and the MFDI terminal set for *H1-xx = 79* do not align.
- The state of the signals (release/close) of the MFDO terminal set for *H2-xx = 50* and the MFDI terminal set for *H1-xx = 5B* do not align.

When *S6-07 = 1 [Enabled]*, if one of these conditions continues for the time set in *S6-05* when the drive starts up or while stopped, the drive detects *SE4*:

Note:

If you set *H1-xx = 5B* to the MFDI terminal, *SE4* will be triggered by the terminal set for *H1-xx = 5B*, not the terminal set for *H1-xx = 79*.

- The state of these signals (release/close) do not align: one MFDO terminal set for *H2-xx = 50* and one of two MFDI terminals set for *H1-xx = 79*.
- The state of these signals (release/close) do not align: one MFDO terminal set for *H2-xx = 50* and both two MFDI terminals set for *H1-xx = 79*.

Note:

The drive does not detect *SE4* fault during hand evacuation. When the MFDI terminal set for *H1-xx = 55 or 155 [Rescue Operation or ! Rescue Operation]* is activated and no internal Run command is active (this includes Zero Servo operation or DC-Injection), *SE4* detection is disabled.

■ S6-06: SE4 Detection Time During Run

No. (Hex.)	Name	Description	Default (Range)
S6-06 (1A98) Expert	SE4 Detection Time During Run	V/f OLV CLV CLV/PM Set the time to detect *SE4 [Brake Response Error]* during run when *S6-07 = 1 [Brake Response Monitor Function = Enabled]*.	200 ms (0 - 10000 ms)

Note:

- When *S6-06 = 0 ms*, the drive does not detect *SE4*.
- If you set *H1-xx = 5B [Brake Feedback N.C.]* to the MFDI terminal, *SE4* will be triggered by the terminal set for *H1-xx = 5B*, not the terminal set for *H1-xx = 79*.

If one of these conditions continues for the time set in *S6-06* during run, the drive detects *SE4*:

- The state of these signals (release/close) do not align: one MFDO terminal set for *H2-xx = 50* and one of two MFDI terminals set for *H1-xx = 79*.
- The state of these signals (release/close) do not align: one MFDO terminal set for *H2-xx = 50* and both two MFDI terminals set for *H1-xx = 79*.

■ S6-07: Brake Response Monitor Function

No. (Hex.)	Name	Description	Default (Range)
S6-07 (1A99)	Brake Response Monitor Function	V/f OLV CLV CLV/PM Sets the function to enable and disable the Brake Response Monitor function.	0 (0, 1)

To use this function, first enable this parameter, then set two MFDI terminals to *H1-xx = 79 [Brake Feedback N.O.]* or *H1-xx = 5B [Brake Feedback N.C.]*.

Example:

- *H1-07 = 5B* and *H1-08 = 5B*
- *H1-07 = 79* and *H1-08 = 79*

0 : Disabled

1 : Enabled

Note:

When *S6-07 = 1*, if you use any of these settings for the MFDI terminals, the drive detects *oPE03 [Multi-Function Input Setting Err]*:
- *H1-xx = 79 [Brake Feedback N.O.]* or *H1-xx = 5B [Brake Feedback N.C.]* are not set to any MFDI terminals.
- *H1-xx = 79* is set to only one MFDI terminal.
- *H1-xx = 5B* is set to only one MFDI terminal.
- *H1-xx = 79* and *H1-xx = 5B* are each set to two MFDI terminals.
- *H1-xx = 79* or *H1-xx = 5B* is set to three or more MFDI terminals.

■ S6-08: SE4 Fault Reset

No. (Hex.)	Name	Description	Default (Range)
S6-08 (1A9A)	SE4 Fault Reset	V/f OLV CLV CLV/PM Sets fault reset methods when *S6-07 = 1 [Brake Response Monitor Selection = Enabled]* and the drive detects *SE4 [Brake Response Error]*. When *S6-07 = 1*, the only method to reset the *SE4* fault is to set *S6-08 = 1*.	0 (0, 1)

0 : Disabled

1 : Enabled

■ S6-09: Brake Resp. Fault@Travel Select

No. (Hex.)	Name	Description	Default (Range)
S6-09 (1AA3)	Brake Resp. Fault@Travel Select	V/f OLV CLV CLV/PM Sets behavior of the Brake Response Fault during travel.	0 (0, 1)

0 : Fault@Detection

The *SE4* fault is triggered immediately. The drive ramps to stop, and the operation is locked.

1 : Alarm@Detection/Fault after Stop

The *SE4* alarm is triggered immediately. The drive continues operation after the *SE4* detection. When the elevator car arrives at the specified floor, the *SE4* alarm turns into the *SE4* fault, and the operation is locked.

■ S6-10: Overacceleration Detection Level

No. (Hex.)	Name	Description	Default (Range)
S6-10 (06B8)	Overacceleration Detection Level	V/f OLV CLV CLV/PM Sets the acceleration rate that triggers the *dv6 [Over Jerk]* fault. Overacceleration detection is disabled when set to 0.0 m/s^2.	Determined by o1-03 (Determined by o1-03)

Note:

The default setting and the setting range change when *o1-03 [Speed Display Unit Selection]* changes:
- When *o1-03 = 0 to 5*, the default setting is 1.5 m/s^2, and the setting range is 0.0 m/s^2 to 20.0 m/s^2.
- When *o1-03 = 6*, the default is 5.0 ft/s^2. and the setting range is 0.0 ft/s^2 to 50.0 ft/s^2.

■ S6-11: Overacceleration Detection Time

No. (Hex.)	Name	Description	Default (Range)
S6-11 (06B9)	Overacceleration Detection Time	V/f OLV CLV CLV/PM Sets the primary delay time that the acceleration must exceed the overacceleration detection level before *dv6 [Over Jerk]* is triggered. Usually it is not necessary to change this setting.	250 ms (0 - 5000 ms)

■ S6-12: Overacceleration Detection Sel

No. (Hex.)	Name	Description	Default (Range)
S6-12 (06BA) Expert	Overacceleration Detection Sel	V/f OLV CLV CLV/PM Sets the conditions for *dv6 [Over Jerk]* detection.	1 (0, 1)

0 : Always Enabled

1 : Enabled only During Run

■ S6-15: Speed Reference Loss Detection

No. (Hex.)	Name	Description	Default (Range)
S6-15 (06BB) Expert	Speed Reference Loss Detection	V/f OLV CLV CLV/PM Sets the function to enable and disable *FrL [Speed Reference Missing]* detection.	1 (0, 1)

0 : Disabled

1 : Enabled

■ S6-16: BaseBlock (BB) Restart Selection

No. (Hex.)	Name	Description	Default (Range)
S6-16 (06BC) Expert	BaseBlock (BB) Restart Selection	V/f OLV CLV CLV/PM Sets the function to let the drive restart the motor after returning to normal operation from Baseblock state (*H1-xx = 8/9 [Baseblock Command (N.O.)/Baseblock Command (N.C.)]*) or from Safe Torque-Off state (Safe Disable inputs H1 and H2 enabled) while the Up/Down command is still active.	0 (0, 1)

0 : Disabled

The drive does not restart the motor when leaving the Baseblock or Safe Torque-Off state even if an Up/Down command is active.

1 : Enabled

The drive restarts the motor when leaving the Baseblock or Safe Torque-Off state while an Up/Down command is active. To use this function with the Safe Disable function, set *L8-88 = 1 [Safe Disable Operation Mode = Mode 1 (Alarm-Off, Ready-On)]*.

12.13 T: Auto-Tuning

Numbers identifying the *T parameters* are displayed when an LED keypad is used. The names of the parameters are displayed on the LCD screen of the LCD keypad. Set the following.

- Induction Motor Auto-Tuning
- PM Motor Auto-Tuning

◆ T0: Tuning Mode Selection

■ T0-00: Tuning Mode Selection

No. (Hex.)	Name	Description	Default (Range)
T0-00 (1197)	Tuning Mode Selection	V/f OLV CLV CLV/PM Sets the type of Auto-Tuning.	0 (0)

0 : Motor Parameter Tuning

◆ T1: Induction Motor Auto-Tuning

T1 parameters set the Auto-Tuning input data for induction motor tuning.

Note:
- The base frequency of drive dedicated motors and special motors for use with vector control may be lower than the base frequency of general-purpose motors, which is 50 Hz or 60 Hz. In such cases, this lower frequency is used as the value for *E1-06 [Base Frequency]* and *E1-04 [Maximum Output Frequency]* after Auto-Tuning completes. If the maximum output frequency is too low and causes problems, change the setting of *E1-04* after Auto-Tuning completes.
- The following induction motor parameters are set automatically.
  - *E1-xx [V/f Pattern for Motor 1]*
  - *E2-xx [Motor Parameters]*
  - *E3-xx [V/f Pattern for Motor 2]*
  - *E4-xx [Motor 2 Parameters]*
  - *F1-xx [Encoder Option Setup]* (only with Closed Loop Vector Control)

■ T1-01: Auto-Tuning Mode Selection

No. (Hex.)	Name	Description	Default (Range)
T1-01 (0701)	Auto-Tuning Mode Selection	V/f OLV CLV CLV/PM Sets the type of Auto-Tuning.	Determined by A1-02 (Determined by A1-02)

Note:

The setting range changes when the *A1-02 [Control Method Selection]* setting changes:
- *A1-02 = 0 [V/f]*: 0, 2
- *A1-02 = 2, 3 [OLV, CLV]*: 0 - 2

0 : Rotational Auto-Tuning

1 : Stationary Auto-Tuning 1

2 : Stationary Line-Line Resistance

Refer to *Auto-Tuning for Induction Motors on page 163* for more information about different types of Auto-Tuning.

■ T1-02: Motor Rated Power

No. (Hex.)	Name	Description	Default (Range)
T1-02 (0702)	Motor Rated Power	V/f OLV CLV CLV/PM Sets the motor rated output in the units set in *o1-58 [Motor Power Unit Selection]*.	Determined by o2-04 (0.00 - 650.00 kW)

■ T1-03: Motor Rated Voltage

No. (Hex.)	Name	Description	Default (Range)
T1-03 (0703)	Motor Rated Voltage	V/f OLV CLV CLV/PM Sets the rated voltage (V) of the motor. Enter the base speed voltage for constant output motors.	200 V Class: 200.0 V 400 V Class: 400.0 V (200 V Class: 0.0 - 255.0 V, 400 V Class: 0.0 - 510.0 V)

If you do Auto-Tuning on a drive-dedicated motor or a specialized motor for vector control, the voltage or frequency can be lower than that of a general-purpose motor. Always compare the data from the nameplate or test report with the Auto-Tuning results and check for differences. Enter the voltage necessary to operate the motor in no-load conditions at rated speed for better control precision around rated speed. If the motor test report or the motor nameplate is not available, enter approximately 90% of the motor rated voltage.

If the drive input power supply voltage is low, enter approximately 90% of the input voltage. When the input power supply voltage is low, the current will increase. Make sure that the main power supply capacity is correct and use a molded-case circuit breaker for the drive.

■ T1-04: Motor Rated Current

No. (Hex.)	Name	Description	Default (Range)
T1-04 (0704)	Motor Rated Current	V/f OLV CLV CLV/PM Sets the rated current (A) of the motor.	Determined by o2-04 (10% to 200% of the continuous rated output current)

Set the motor rated current between 50% and 100% of the continuous rated output current of the drive for the best performance. Enter the current at the motor base speed.

■ T1-05: Motor Base Frequency

No. (Hex.)	Name	Description	Default (Range)
T1-05 (0705)	Motor Base Frequency	V/f OLV CLV CLV/PM Sets the base frequency (Hz) of the motor.	60.0 Hz (0.0 - 590.0 Hz)

During Auto-Tuning, the value of *T1-05* is set to *E1-04 [Maximum Output Frequency]*. If *T1-05 < 40 Hz*, *E1-04* = 40 Hz. If you operate the drive at a speed that is higher than the base frequency, set *E1-04* (*E3-04* for motor 2) to the maximum output frequency after you do Auto-Tuning.

■ T1-06: Number of Motor Poles

No. (Hex.)	Name	Description	Default (Range)
T1-06 (0706)	Number of Motor Poles	V/f OLV CLV CLV/PM Sets the number of motor poles.	4 (2 - 120)

■ T1-07: Motor Base Speed

No. (Hex.)	Name	Description	Default (Range)
T1-07 (0707)	Motor Base Speed	V/f OLV CLV CLV/PM Sets the motor base speed for Auto-Tuning (min^{-1} (r/min)).	1750 min^{-1} (r/min) (0 - 35400 min^{-1} (r/min))

■ T1-08: Encoder Pulse Count (PPR)

No. (Hex.)	Name	Description	Default (Range)
T1-08 (0708)	Encoder Pulse Count (PPR)	V/f OLV CLV CLV/PM Sets the number of PG (pulse generator, encoder) pulses.	1024 ppr (0 - 60000 ppr)

Set the actual number of pulses for one full motor rotation.

■ T1-09: Motor No-Load Current

No. (Hex.)	Name	Description	Default (Range)
T1-09 (0709)	Motor No-Load Current	V/f OLV CLV CLV/PM Sets the no-load current of the motor.	- (0 A - T1-04; max. of 2999.9)

Note:

The display units are different for different models:
- 2022 - 2041, 4012 - 4023: 0.01 A
- 2059 - 2519, 4030 - 4380: 0.1 A

The value shown is the no-load current that the drive automatically calculates from the values set in *T1-02 [Motor Rated Power]* and *T1-04 [Motor Rated Current]*. Set the no-load current shown on the motor test report. If the motor test report is not available, do not change this parameter.

■ T1-10: Motor Rated Slip Frequency

No. (Hex.)	Name	Description	Default (Range)
T1-10 (070A)	Motor Rated Slip Frequency	V/f OLV CLV CLV/PM Sets motor rated slip.	0.000 Hz (0.000 - 20.000 Hz)

Shows 0.000 Hz as the default value. Set the rated slip shown on the motor test report. If the motor test report is not available, do not change this parameter.

■ T1-12: Test Mode Selection

No. (Hex.)	Name	Description	Default (Range)
T1-12 (0BDB)	Test Mode Selection	V/f OLV CLV CLV/PM Sets the function to enable Test Mode after Stationary Auto-Tuning. When you can operate the motor with a light load attached after Stationary Auto-Tuning is complete, enable this parameter.	0 (0, 1)

0 : No

1 : Yes

After Auto-Tuning, the drive automatically sets *E2-02 [Motor Rated Slip]* and *E2-03 [Motor No-Load Current]* when you operate the motor for the first time in Drive Mode.

Note:

After Auto-Tuning is complete and you set the drive to Drive Mode, operate the motor in these conditions:
- Make sure that you connect all wiring between the drive and motor
- Make sure that a mechanical brake on the motor shaft is not locked
- Keep the motor-load ratio at 30%
- Hold constant speed for longer than 1 second at a minimum of 30% of the speed set in *E1-06 [Base Frequency]* (the default setting is the same as the maximum frequency).

■ T1-13: No-Load Voltage

No. (Hex.)	Name	Description	Default (Range)
T1-13 (0BDC)	No-Load Voltage	V/f OLV CLV CLV/PM Sets the no-load voltage of the motor. When the no-load voltage at rated speed is available, for example on the motor test report, set the voltage in this parameter. If the no-load voltage is not available, do not change this parameter.	T1-03 × 0.85 (200 V Class: 0.0 - 255.0 V, 400 V Class: 0.0 - 510.0 V)

Note:

To get the same qualities as a Yaskawa 1000-series drive or previous series drive, set this parameter = *T1-03 [Motor Rated Voltage]*.

◆ T2: PM Motor Auto-Tuning

T2 parameters set the Auto-Tuning input data for PM motor tuning.

Note:

The drive automatically sets these PM motor parameters:
- *E1-xx [V/f Pattern for Motor 1]*
- *E5-xx [PM Motor Settings]*
- *F1-xx [Encoder Option Setup]*
  Only when *A1-02 = 7 [Control Method Selection = PM Closed Loop Vector]*

■ T2-01: PM Auto-Tuning Selection

No. (Hex.)	Name	Description	Default (Range)
T2-01 (0750)	PM Auto-Tuning Selection	V/f OLV CLV CLV/PM Sets the type of Auto-Tuning for PM motors.	0 (0, 1, 3, 4)

Note:

Do Stationary Auto-Tuning first while the motor brake is closed. If you want to improve the accuracy of back-EMF and Encoder Offset value, do Rotational Auto-tuning.

0 : Manual Entry w/ Motor Data Sheet

1 : Stationary (Ld, Lq, R, back-EMF, Encoder offset)

3 : Stationary Encoder Offset Tuning

4 : Rotational (Only back-EMF, Encoder offset)

Refer to *Auto-Tuning for Motor Parameters for PM Motor on page 164* for more information about different types of Auto-Tuning.

■ T2-04: PM Motor Rated Power

No. (Hex.)	Name	Description	Default (Range)
T2-04 (0730)	PM Motor Rated Power	V/f OLV CLV CLV/PM Uses the units set in *o1-58 [Motor Power Unit Selection]* to set the PM motor rated output power.	Determined by o2-04 (0.00 - 650.00 kW)

■ T2-05: PM Motor Rated Voltage

No. (Hex.)	Name	Description	Default (Range)
T2-05 (0732)	PM Motor Rated Voltage	V/f OLV CLV CLV/PM Sets the rated voltage (V) of the motor.	200 V Class: 200.0 V 400 V Class: 400.0 V (200 V Class: 0.0 - 255.0 V, 400 V Class: 0.0 - 510.0 V)

■ T2-06: PM Motor Rated Current

No. (Hex.)	Name	Description	Default (Range)
T2-06 (0733)	PM Motor Rated Current	V/f OLV CLV CLV/PM Sets the rated current (A) of the motor.	Determined by o2-04 (10% to 200% of the continuous rated output current)

■ T2-08: Number of PM Motor Poles

No. (Hex.)	Name	Description	Default (Range)
T2-08 (0734)	Number of PM Motor Poles	V/f OLV CLV CLV/PM Sets the number of motor poles.	12 (2 - 120)

Note:

When you connect the PG-E3 option, the maximum value for this parameter is 48.

■ T2-09: PM Motor Base Speed

No. (Hex.)	Name	Description	Default (Range)
T2-09 (0731)	PM Motor Base Speed	V/f OLV CLV CLV/PM Sets the motor base speed (min^{-1} (r/min)).	150 min^{-1} (r/min) (0 - 24000 min^{-1} (r/min))

■ T2-10: PM Motor Stator Resistance

No. (Hex.)	Name	Description	Default (Range)
T2-10 (0754)	PM Motor Stator Resistance	V/f OLV CLV CLV/PM Sets the stator resistance for each motor phase.	0.000 Ω (0.000 - 65.000 Ω)

■ T2-11: PM Motor d-Axis Inductance

No. (Hex.)	Name	Description	Default (Range)
T2-11 (0735)	PM Motor d-Axis Inductance	V/f OLV CLV CLV/PM Sets the d-axis inductance of the motor on a per phase basis.	0.00 mH (0.00 - 600.00 mH)

■ T2-12: PM Motor q-Axis Inductance

No. (Hex.)	Name	Description	Default (Range)
T2-12 (0736)	PM Motor q-Axis Inductance	V/f OLV CLV CLV/PM Sets the q-Axis inductance of the motor on a per phase basis.	0.00 mH (0.00 - 600.00 mH)

■ T2-13: Back-EMF Units Selection

No. (Hex.)	Name	Description	Default (Range)
T2-13 (0755)	Back-EMF Units Selection	V/f OLV CLV CLV/PM Sets the units that the drive uses to set the induced voltage constant.	1 (0, 1)

0 : mV/(rev/min)

1 : mV/(rad/sec)

Note:

- When *T2-13 = 0*, the drive will use *E5-24 [PM Back-EMF L-L Vrms (mV/rpm)]* and will automatically set *E5-09 [PM Back-EMF Vpeak (mV/(rad/s))] = 0.0*.
- When *T2-13 = 1*, the drive will use *E5-09* and will automatically set *E5-24 = 0.0*.

■ T2-14: Back-EMF Voltage Constant (Ke)

No. (Hex.)	Name	Description	Default (Range)
T2-14 (0737)	Back-EMF Voltage Constant (Ke)	V/f OLV CLV CLV/PM Sets the motor induced voltage constant (Ke).	Determined by T2-13 (0.0 - 6500.0)

■ T2-15: Pull-In Current Level

No. (Hex.)	Name	Description	Default (Range)
T2-15 (0756)	Pull-In Current Level	V/f OLV CLV CLV/PM Sets the level of the pull-in current as a percentage of *E5-03 [PM Motor Rated Current (FLA)]*. Usually it is not necessary to change this setting.	30% (0 - 120%)

If the load inertia is high, increase the setting value.

■ T2-16: Encoder Pulse Count (PPR)

No. (Hex.)	Name	Description	Default (Range)
T2-16 (0738)	Encoder Pulse Count (PPR)	V/f OLV CLV CLV/PM Sets the number of PG (pulse generator, encoder) pulses.	1024 ppr (1 - 15000 ppr)

Set the actual number of pulses for one full motor rotation.

■ T2-17: Encoder Z-Pulse Offset

No. (Hex.)	Name	Description	Default (Range)
T2-17 (0757)	Encoder Z-Pulse Offset	V/f OLV CLV CLV/PM Sets the encoder Z-pulse offset (Δθ) (pulse generator, encoder) that is listed on the motor nameplate.	0.0° (-180.0 - +180.0°)

If you do not know the quantity of encoder (pulse generator, encoder) Z-pulse offset, or if you replaced the encoder, do Encoder Tuning and correct for the offset (Δθ) from the Z phase.

■ T2-18: SINCOS Encoder Tuning Speed

No. (Hex.)	Name	Description	Default (Range)
T2-18 (0BB0)	SINCOS Encoder Tuning Speed	V/f OLV CLV CLV/PM Sets the speed reference for Auto-Tuning of PG-E3 encoder characteristics (*T2-01 = 1, 3, or 4 [PM Auto-Tuning Selection = Stationary (Ld, Lq, R), Encoder Tuning, or Rotational (Ld, Lq, R, back-EMF)]*).	10 min^{-1} (r/min) (1 - 30 min^{-1} (r/min))

■ T2-19: SINCOS Encoder Tuning Direction

No. (Hex.)	Name	Description	Default (Range)
T2-19 (0BB1)	SINCOS Encoder Tuning Direction	V/f OLV CLV CLV/PM Sets the direction of motor rotation for Auto-Tuning of PG-E3 encoder characteristics (*T2-01 = 3 or 4 [PM Auto-Tuning Selection = Encoder Tuning or Rotational (Ld, Lq, R, back-EMF)]*).	0 (0, 1)

0 : Pulse A leads in Up Direction

1 : Pulse B leads in Up Direction

Index

Numerics

24 V power supply
Power supply input terminals 84

A

AC reactor
Wiring 105
Acceleration and deceleration ramps
Switching by external input 534
Switching by Motor 2 Selection commands 535
Switching by output speed 535
Acceleration ramp
Parameter 534
Unit of measurement setting 538
AFR
Parameter 655
Alarm 300, 331
ALM indicator 118, 120
Altitude
Derating 406
Environment 30
Ambient humidity 30
Ambient temperature setting 30
Ambient Temperature Setting
Parameter 649
Analog input
Function selection for terminals A1 to A3 619
Analog Output
Gain/Bias Adjustment 624
Monitor Parameter Selection 624
Signal Level Selection 624
Terminal AM Monitor Selection 626
Terminal FM Monitor Selection 626
ASR
Fine tuning 544
Parameter 543
Vector Control Adjustment Procedure 544
Auto-Tuning 163
Induction motors 163
InductionMotor Parameters 711
PM Motor Parameters 713
PM motors 164
Precautions 165
Procedure 145
Rotational Auto-Tuning Precautions 166
Stationary Auto-Tuning for Line-to-Line Resistance precautions 167
Stationary Auto-Tuning Precautions 166
Stator resistance Auto-Tuning precautions 167
Auto-Tuning Error 300, 343
Automatic Fault Reset
Parameter 640
Automatic Torque Boost Function 651

B

Backlight
Timing of shut-off 150
Backup
Parameters (drive to keypad) 153
Backup function 671
Base frequency
Parameter 557
Base Frequency
Motor 2 Parameters 562
Base voltage
Parameter 558
Basic operation
Get started 126
bAT
Fault 306
Minor Fault 331
Battery
Disposal 395
Replacement 390
Specifications 390
bb 331
bCE
Fault 306
Minor Fault 331
boL
Fault 306
Minor Fault 331
brA 306
Braking resistor
Wiring 96
brTC
Minor Fault 331
bUS
Detection conditions 587
Fault 306
Minor Fault 331
Operation Selection after Detection 586
bUSy 332

C

CALL 332
Capacitor Maintenance Setting 676
Carrier frequency
Derating 405
Parameter 548
CDBR type braking unit
Connect multiple units 101
Wiring 96
CE
Detection Selection 629
Detection time 629
Fault 307
Minor Fault 332
Operation Selection after Detection 628
CF
Fault 307
Checklist
Test run 209
Circulation Fan
Replacement 365
Communication option
Parameter 586
Control circuit terminal block
Replacement 384
Control circuit terminals
Configuration of terminal block 86
I/O terminals function selection switches 91
Terminal functions 82
Wire gauge 87
Wiring 81
Wiring procedure for terminal block 88
Control method
Selection 518
Cooling Fan
Activation Conditions Setting 649
Estimated Lifespan 363
Off Delay Timer 649
Replacement 365

Copy Function Error 300, 347
CPF00 307
CPF01 307
CPF02 307
CPF03 307
CPF06 308
CPF07 308
CPF08 308
CPF10 308
CPF11 308
CPF12 308
CPF13 308
CPF14 308
CPF16 309
CPF17 309
CPF18 309
CPF19 309
CPF20 309
CPF21 309
CPF22 309
CPF23 309
CPF24 309
CPF26 310
CPF27 310
CPF28 310
CPF29 310
CPF30 310
CPF31 310
CPF32 310
CPF33 310
CPF34 310
CPF35 311
CPF36 311
CPF37 311
CPF38 311
CPF39 311
CPyE 347
Crimp ferrule 87
CrST 332
CSEr 347
Cumulative Operation Time Setting 675
CyPo 332

D

Data log 148
  Monitor selection 148
  Sampling time 149
  Start procedure 147
  Stop procedure 147
DC reactor
  Wiring 105
Deceleration ramp
  Parameter 534
  Unit of measurement setting 538
Delete
  Delete Backed-up Parameters 156
Derating 650
  Altitude 406
  Ambient Temperature Setting 649
  Carrier frequency 405
  Enclosure Type 650
  External Heatsink 650
dEv
  Detection level 570
  Detection time 570
  Fault 311
  Minor Fault 332
  Operation Selection after Detection 569
dFPS 347
DI-A3
  Parameter 576
Diagnosing and Resetting Faults 348
Digital input option
  Parameter 576
Digital output option
  Parameter 583
DIP switch 91
Disposal
  Battery 395
  Drive 395
  microSD card 395
  Packing material 395
DO-A3
  Parameter 583
Drive
  Control Circuit Terminal Block Replacement 384
  Disposal 395
  Exterior and Mounting Dimensions (IP20/UL Open Type) 407–414
  Initialization 518
  Initialize Parameters 518
  Inspection 360
  Long-Term Storage 392
  Rating (200 V) 399
  Rating (400 V) 401
Drive Mode Unit Monitor Select 663
Drive Model Selection 670
Drive watt loss 35
Droop Control
  Parameter 530
dv1 311
dv2 311
dv3 312
  Detection condition settings 570
dv4 312
  Detection condition settings 571
dv6 312
dv7 313
dv8 313
Dwell function
  Parameter 529

E

Earth Leakage Circuit Breaker
  ELCB 102
  Wiring 102
EF 333
EF0
  Detection conditions 587
  Fault 313
  Minor Fault 333
  Operation Selection after Detection 587
EF10
  Fault 314
  Minor Fault 334
EF3
  Fault 313
  Minor Fault 333
EF4
  Fault 313
  Minor Fault 333
EF5
  Fault 314
  Minor Fault 333
EF6
  Fault 314

Minor Fault 333
EF7
Fault 314
Minor Fault 333
EF8
Fault 314
Minor Fault 334
EF9
Fault 314
Minor Fault 334
Elapsed Operating Time Selection 676
Electrolytic Capacitor
Estimated Lifespan 363
Emergency Stop Ramp
Parameter 537
Enclosure Type
Derating 650
Encoder Auto-Tuning 164
Encoder option
Parameter 567
End1 343
End10 344
End2 343
End3 343
End4 343
End5 343
End6 343
End7 343
End8 343
End9 343
Energy-saving control
Parameter 531
Enter command 275
EP24v 334
Er-01 344
Er-02 344
Er-03 344
Er-04 344
Er-05 344
Er-08 345
Er-09 345
Er-10 345
Er-11 345
Er-12 345
Er-13 345
Er-14 345
Er-18 346
Er-19 346
Er-20 346
Er-21 346
Er-22 346
Er-23 346
Er-24 346
Er-25 346
Err 314
Error Code List 301
Exterior and mounting dimensions
Installation dimensions 48
Panel cut out dimensions 48
Exterior and Mounting Dimensions (IP20/UL Open Type)
Drive 407–414
External 24 V power supply
Power supply input terminals 84
External Heatsink
Derating 650

F

FAn
Fault 315
Minor Fault 334
Fan Operation Time Setting 676
FAn1 315
Fault 300, 306
Fault code
MEMOBUS/Modbus 292
Fault Code List 301
Fault history
Display procedure 141
Fault Reset 348
Fault Trace/History Initialize 677
Feed Forward Control
Parameter 656
Field Forcing
Parameter 555
Firmware update lock 521
FrL 315
Fuse rating 109

G

Getting set up 126
GF 315
Protection Functions 649
Ground
Drive 70
Ground Fault Detection
Protection Functions 649

H

HCA 334
HOME screen 136
Horsepower 668
How to read the model number 23
Humidity
Environment 30

I

iFEr 347
IGBT Maintenance Setting 676
Induction Motor
Motor Parameters 558
Induction motors
Auto-Tuning 163
Input Phase Detection
Protection Functions 648
Input voltage
Parameter 556
Inspection
Drive 360
Installation
Front cover 43
Keypad 37
Terminal cover 43
Installation dimensions 48
Installation environment 30
Interlock
Circuit example 169
Internal Drive Braking Transistor
Protection Functions 651

J

Jerk
Parameter 539

K

Keypad
Backlight setting 150
Battery Replacement 390
Data log setting 148

Display drive information 152
Display software version 152
External dimensions 38
HOME screen 136
Installation 37
Installation on control panel 38
Language selection 157, 517
LED status 118
Method of operation 118
Remove 37
Set date and time 158
Set time 158
Setup Wizard 159
Start/stop data logging 147
Keypad Disconnect Detection 670
Keypad Display 663
Keypad Display Selection 664
Keypad Operation 669
Keypad-related settings 663
kWh Monitor Initialization 677

L

L24v 335
Language selection 517
Procedure 157
LCD contrast adjustment 665
LF 315
Protection Functions 648
LF2 315
Protection Functions 650
LKEB type braking resistor unit
Wiring 96
LOCAL/REMOTE indicator 118, 120
LoG 335
LO/RE Key Function Selection 669
LT-1 335
LT-2 335
LT-3 335
LT-4 335

M

Magnetic Flux Compensation
Parameter 528
Main circuit terminals
Configuration of terminal block 58
Line voltage drop 63
Wire gauge 63
Wiring 58
Wiring procedure for terminal block 75
Main menu
Display procedure 136
Maintenance Period 673
Maximum Output Frequency
Motor 2 Parameters 561
Parameter 557
Maximum Output Voltage
Motor 2 Parameters 561
Parameter 557
MCF 316
MEMOBUS
Broadcast Messages 291
Command data 276
Communication error code 294
Communication specifications 266
Enter command 275
Fault code 292
Loopback test 271
Minor fault code 294
Monitor data 279
Register reading 271
Register writing 272
Self-diagnosis 275
Wiring 266
MEMOBUS/Modbus Communications
Serial communication terminals 86
Setting for termination resistor 94
microSD card
Disposal 395
Insertion slot 118
Mid point B frequency
Parameter 558
Mid point B voltage
Parameter 558
Middle Output Frequency
Motor 2 Parameters 562
Parameter 557
Middle Output Frequency Voltage
Motor 2 Parameters 562
Parameter 558
Minimum output frequency
Parameter 558
Minimum Output Frequency
Motor 2 Parameters 562
Minimum Output Voltage
Motor 2 Parameters 562
Parameter 558
Minor Fault 300, 331
Minor fault code
MEMOBUS/Modbus 294
Minor Fault Code List 301
Modbus
Broadcast Messages 291
Command data 276
Communication error code 294
Communication specifications 266
Enter command 275
Fault code 292
Loopback test 271
Minor fault code 294
Monitor data 279
Register reading 271
Register writing 272
Self-diagnosis 275
Wiring 266
Molded-case circuit breaker
MCCB 102
Wiring 102
Monitor Selection at Power-up 663
Monitors
Data log setting 148–149
Display procedure 142
Set custom monitors 143
Show custom monitors 144
Start/stop data logging 147
Motor
Change direction of motor rotation 136
Positive Temperature Coefficient (PTC) Thermistor 632
Wiring 58
Wiring distance 70
Motor 2
Base Frequency 562
Leakage Inductance 564
Line-to-Line Resistance 563
Maximum Output Frequency 561
Maximum Output Voltage 561

Middle Output Frequency 562
Middle Output Frequency Voltage 562
Minimum Output Frequency 562
Minimum Output Voltage 562
No-load current 563
Number of motor poles 563
Rated current 562
Rated Slip 563
V/f Pattern 561
Motor Overheating
Operation During Detection of Alarms 250, 635
Operation During Detection of Faults (PTC Input) ... 250, 636
Motor Overload
Electric Thermal Protection Operation Time 249, 635
Protection Functions 247, 633
Motor parameters
Motor 2 number of motor poles 563
Motor Parameters 556, 558
Motor 2 562
Motor 2 Leakage Inductance 564
Motor 2 Line-to-Line Resistance 563
Motor 2 No-load current 563
Motor 2 rated Current 562
Motor 2 Rated Slip 563
Motor parameters (induction motors) 558
Leakage Inductance 560
Line-to-Line Resistance 560
Motor Iron Loss 560
Motor Iron-Core Saturation Coefficient 1 560
Motor Iron-Core Saturation Coefficient 2 560
Motor rated power (kW) 561
No-load current 559
Number of motor poles 559
Rated current 247, 559
Rated slip 559
Motor Power Unit Selection 668

N

Nameplate 23
ndAT 347
Noise filter
Wiring 107
Number of Travels Counter Reset 677

O

oC 316
Overcurrent Detection Gain 650
oFA00 317
oFA01 317
oFA02 317
oFA03 317
oFA04 317
oFA05 317
oFA06 317
oFA10 317
oFA11 318
oFA12 318
oFA13 318
oFA14 318
oFA15 318
oFA16 318
oFA17 318
oFA30 318
oFA31 318
oFA32 319
oFA33 319
oFA34 319
oFA35 319
oFA36 319
oFA37 319
oFA38 319
oFA39 319
oFA40 319
oFA41 320
oFA42 320
oFA43 320
oFb00 320
oFb01 320
oFb02 320
oFb03 320
oFb04 320
oFb05 320
oFb06 321
oFb10 321
oFb11 321
oFb12 321
oFb13 321
oFb14 321
oFb15 321
oFb16 321
oFb17 321
oFC00 322
oFC01 322
oFC02 322
oFC03 322
oFC04 322
oFC05 322
oFC06 322
oFC10 322
oFC11 323
oFC12 323
oFC13 323
oFC14 323
oFC15 323
oFC16 323
oFC17 323
oFC50 323
oFC51 323
oFC52 323
oFC53 324
oFC54 324
oFC55 324
Off-Delay Timer 528
oH
Alarm Settings 647
Fault 324
Minor Fault 335
oH1 324
oH3
Fault 324
Minor Fault 336
Operation During Detection of Alarms 250, 635
oH4 325
Operation During Detection of Faults (PTC Input) ... 250, 636
oL1 325
oL2 325
Protection Functions 649
oL3
Fault 326
Minor Fault 336
oL4
Fault 326
Minor Fault 336
On-Delay Timer 528
oPE01 340

oPE02 340
oPE03 340
oPE05 341
oPE06 341
oPE07 341
oPE08 341
oPE10 342
oPE16 342
oPE18 342
oPE20 342
oPE21 342
oPr 326
Option card
  Parameter 567
Options 415
oS
  Detection level 570
  Detection time 570
  Fault 326
  Minor Fault 336
  Operation Select at Overspeed 568
Output Phase Loss Detection
  Protection Functions 648
ov
  Fault 326
  Minor Fault 336
ovEr 337
Overtorque detection
  Parameter 642

P

Panel cut out dimensions 48
Parameter
  Access Level Selection 517
  Automatic selection 522
  Backup (drive to keypad) 153
  Changing setting values 138
  Checking modified parameters 139
  Checking user custom parameters 137
  Delete Backed-up Parameters 156
  Restore (Auto Backup) 162
  Restore (keypad to drive) 154
  Restoring default settings 140
  User-set 521
  Verify (keypad and drive) 155
Parameter Setting Errors 300, 340
PASS 337
Password
  Setting 520
  Verification 520
PC
  Connection procedure 95
Peripheral Devices 415
PF 327, 337
  Protection Functions 648
PF5 327
PGo
  Detection time 570
  Fault 328
  Minor Fault 337
  Operation Selection after Detection 568
PGoH
  Detection level 572
  Fault 328
  Level detection (PG1) 571
  Minor Fault 337
Phase Order Selection 527
PM motor parameters
  Back-EMF Setting Units Selection 566
  d-Axis inductance 565
  Encoder Z pulse offset 565
  Induced voltage constant 1 565
  Induced voltage constant 2 566
  Motor rated current 247, 564
  Motor rated power 564
  Number of motor poles 564
  q-Axis inductance 565
  Stator resistance 565
PM Motor Parameters 564
PM motors
  Auto-Tuning 164
  Fine Adjustment 658
PM Motors
  Fine Adjustment 662
  Motor parameters 564
Positive Temperature Coefficient (PTC) Thermistor 632
Power loss 35
Protection Functions
  DC bus undervoltage 637
  Drive Overheating 647
  GF 649
  Ground Fault Detection 649
  Input Phase Detection 648
  Internal Drive Braking Transistor 651
  LF 648
  LF2 650
  Motor Overheating 250, 635
  Motor Overheating (PTC Input) 250, 636
  Motor Overload 247, 633
  oC 650
  oH3 ..... 250, 635
  oH4 ..... 250, 636
  oL2 649
  Output Phase Loss Detection 648
  Overcurrent 650
  Overload 649
  PF 648
  rr 651
  Uv1 637
Protective function
  Drive Overheating 647
  oH 647

R

Rating (200 V)
  Drive 399
Rating (400 V)
  Drive 401
rdEr 347
Remove
  Front cover 43
  Keypad 37
  Terminal cover 43
RESET key 118
Restore
  Parameters (Auto Backup) 162
  Parameters (keypad to drive) 154
rF 328
RJ-45 connector 118
Rotational Auto-Tuning
  Induction motors 163
  PM motors 164
  Precautions 166
rr 328
  Protection Functions 651
rUn 337

RUN indicator 118, 120
RUN key 118

S

Sampling time setting
  Data log 149
SC 328
SCE 328
SCF 328
SE 338
SE1 328
SE2 329
SE3 329
SE4 329
SE8 329
Serial communication terminals
  MEMOBUS/Modbus Communications 86
Serial Communications
  Parameter 627
Set date and time
  Operation 158
Set time
  Operation 158
Setup Wizard
  Operation 159
Slip compensation
  Parameter 540
Softcharge Relay Maintenance Set 676
Software version
  Display procedure 152
Speed Agreement
  Parameter 639
Speed Detection
  Parameter 639
Speed reference
  Command source correlation diagram 550
  LOCAL/REMOTE Run selection 523, 550
  Making changes using keypad 136
  Switching between LOCAL/REMOTE 523, 550
Stall Prevention function
  Parameter 637
Stationary Auto-Tuning
  Induction motors 163
  PM motors 164
  Precautions 166
Stationary Auto-Tuning for Line-to-Line Resistance 163
  Precautions 167
Stator resistance Auto-Tuning 164
  Precautions 167
STo 338
SToF 338
Stop command
  LOCAL/REMOTE Run selection 525
STOP key 118
STOP Key Function Selection 669
Stopping Method Selection 525
Surge protective device
  Connection 106
SvE 329

T

TCA
  Minor Fault 338
TCF 329
TCS
  Minor Fault 338
Temperature
  Environment 30
Terminal block
  Configuration of control circuit terminal block 86
  Configuration of main circuit terminal block 58
  Control circuit terminal block functions 82
  I/O terminals function selection switches 91
Terminal function selection 92
  Terminal A1 91–92
  Terminal A2 91–92
  Terminal A3 ..... 91, 93
  Terminal AM 91, 93
  Terminal FM 91, 93
Terminal screw
  Screwdriver 14
Termination resistor
  Setting switch 94
Test run
  Checklist 209
  Procedure 126
Thermal overload relay
  Connection 103
Tightening torque
  Control circuit terminals 87
  Main circuit terminals 63
TiM
  Fault 329
  Minor Fault 338
Timer function
  Parameter 528
Torque Compensation
  Parameter 542
Torque limit function
  Parameter 645
Troubleshooting
  Code Displayed 301
  No Code Displayed 350
Troubleshooting without Fault Display 350
Tuning 534

U

UL3
  Fault 330
  Minor Fault 338
UL4
  Fault 330
  Minor Fault 339
Undertorque detection
  Parameter 642
Unit of measurement setting
  Acceleration and deceleration ramps 538
Unit selector 668
Up/Down command
  LOCAL/REMOTE Run selection 525
  Switching between LOCAL/REMOTE 525
USB port 118
  Connecting a PC 95
User Parameter Default Value 669
User Units Maximum Value 665
User-SetDisplayUnits Dec Display 665
Uv 339
Uv1 330
  Detection level settings 637
Uv2 330
Uv3 330

V

vAEr 347
V/f Pattern 556
  Second Motor 561

V/f Pattern Display Unit....664
Verify
Parameters (keypad and drive)....155
vFyE....347
Vibration-resistant.... 30
voF
Minor Fault....339

W

WEEE....395
Wire gauge
Control circuit terminals.... 87
Main circuit terminals.... 63
Voltage drop.... 63
Wiring
AC reactor....105
Braking resistor.... 96
Checklist.... 111
Control circuit terminal block.... 88
Control circuit terminals.... 81
DC reactor....105
ELCB....102
Main circuit terminal block 75
Main circuit terminals.... 58
MCCB....102
MEMOBUS/Modbus....266
Motor.... 58
Noise filter....107
Thermal overload relay 103
Wiring distance
Drive and motor.... 70

Revision History

Date of Publication	Revision Number	Section	Revised Content
October 2024	-	-	First Edition

YASKAWA AC Drive ES700

For Elevator Applications

Technical Manual

DRIVE CENTER (INVERTER PLANT)
2-13-1, Nishimiyaichi, Yukuhashi, Fukuoka, 824-8511, Japan
Phone: +81-930-25-2548 Fax: +81-930-25-3431
www.yaskawa.co.jp

YASKAWA ELECTRIC CORPORATION
New Pier Takeshiba South Tower, 1-16-1, Kaigan, Minatoku, Tokyo, 105-6891, Japan
Phone: +81-3-5402-4502 Fax: +81-3-5402-4580
www.yaskawa.co.jp

YASKAWA AMERICA, INC.
2121, Norman Drive South, Waukegan, IL 60085, U.S.A.
Phone: +1-800-YASKAWA (927-5292) or +1-847-887-7000 Fax: +1-847-887-7310
www.yaskawa.com

YASKAWA ELÉTRICO DO BRASIL LTDA.
777, Avenida Piraporinha, Diadema, São Paulo, 09950-000, Brasil
Phone: +55-11-3585-1100 Fax: +55-11-3585-1187
www.yaskawa.com.br

YASKAWA EUROPE GmbH
Philipp-Reis-Str. 6, 65795 Hattersheim am Main, Germany
Phone: +49-6196-569-300 Fax: +49-6196-569-398
E-mail: info@yaskawa.eu.com
www.yaskawa.eu.com

YASKAWA ELECTRIC KOREA CORPORATION
6F, 112, LS-ro, Dongan-gu, Anyang-si, Gyeonggi-do, Korea
Phone: +82-31-8015-4224 Fax: +82-31-8015-5034
www.yaskawa.co.kr

YASKAWA ASIA PACIFIC PTE. LTD
30A, Kallang Place, #06-01, 339213, Singapore
Phone: +65-6282-3003 Fax: +65-6289-3003
www.yaskawa.com.sg

YASKAWA ELECTRIC (THAILAND) CO., LTD.
59, 1F-5F, Flourish Building, Soi Ratchadapisek 18, Ratchadapisek Road, Huaykwang, Bangkok, 10310, Thailand
Phone: +66-2-017-0099 Fax: +66-2-017-0799
www.yaskawa.co.th

YASKAWA ELECTRIC (CHINA) CO., LTD.
22F, Link Square 1, No.222, Hubin Road, Shanghai, 200021, China
Phone: +86-21-5385-2200 Fax: +86-21-5385-3299
www.yaskawa.com.cn

YASKAWA ELECTRIC (CHINA) CO., LTD. BEIJING OFFICE
Room 1011, Tower W3 Oriental Plaza, No. 1, East Chang An Avenue,
Dong Cheng District, Beijing, 100738, China
Phone: +86-10-8518-4086 Fax: +86-10-8518-4082

YASKAWA ELECTRIC TAIWAN CORPORATION
12F, No. 207, Section 3, Beishin Road, Shindian District, New Taipei City 23143, Taiwan
Phone: +886-2-8913-1333 Fax: +886-2-8913-1513 or +886-2-8913-1519
www.yaskawa.com.tw

YASKAWA INDIA PRIVATE LIMITED
#17/A, Electronics City, Hosur Road, Bengaluru, 560 100 (Karnataka), India
Phone: +91-80-4244-1900 Fax: +91-80-4244-1901
www.yaskawaindia.in

YASKAWA

YASKAWA ELECTRIC CORPORATION

In the event that the end user of this product is to be the military and said product is to be employed in any weapons systems or the manufacture thereof, the export will fall under the relevant regulations as stipulated in the Foreign Exchange and Foreign Trade Regulations. Therefore, be sure to follow all procedures and submit all relevant documentation according to any and all rules, regulations and laws that may apply.

Specifications are subject to change without notice for ongoing product modifications and improvements.

© 2024 YASKAWA Electric Corporation

SIEPC7106172E

MANUAL NO. SIEP C710617 2EA <0>-0
Published in Japan October 2024
23-2-25
Original instructions.